Service
Service
Service

Service Manual

Four Track Auto Reverse Stereo Cassette Player.

12 V

Produced for Ford Australia Ltd. for fitment to:

XD Falcon and ZJ Fairlane

Ford Part No. 76DA 19A053 A2C.

SPECIFICATIONS

NUMBER OF TRACKS	– 4 TRACKS – 2 CHANNELS.
TAPE CARTRIDGE	– STEREO/MONAURAL COMPACT CASSETTE.
TAPE SPEED	– 4.75 CM/SEC.
POWER OUTPUT	– 12 WATTS.
SPEAKER IMPEDANCE	– 4 OHMS.
POWER INPUT	– 12 V NEGATIVE TO EARTH.
CURRENT	– .75 AMP. APPROX.
SEMICONDUCTORS	– 5 IC's 1 Transistor 4 Diodes.

BLOCK DIAGRAM (AUDIO)

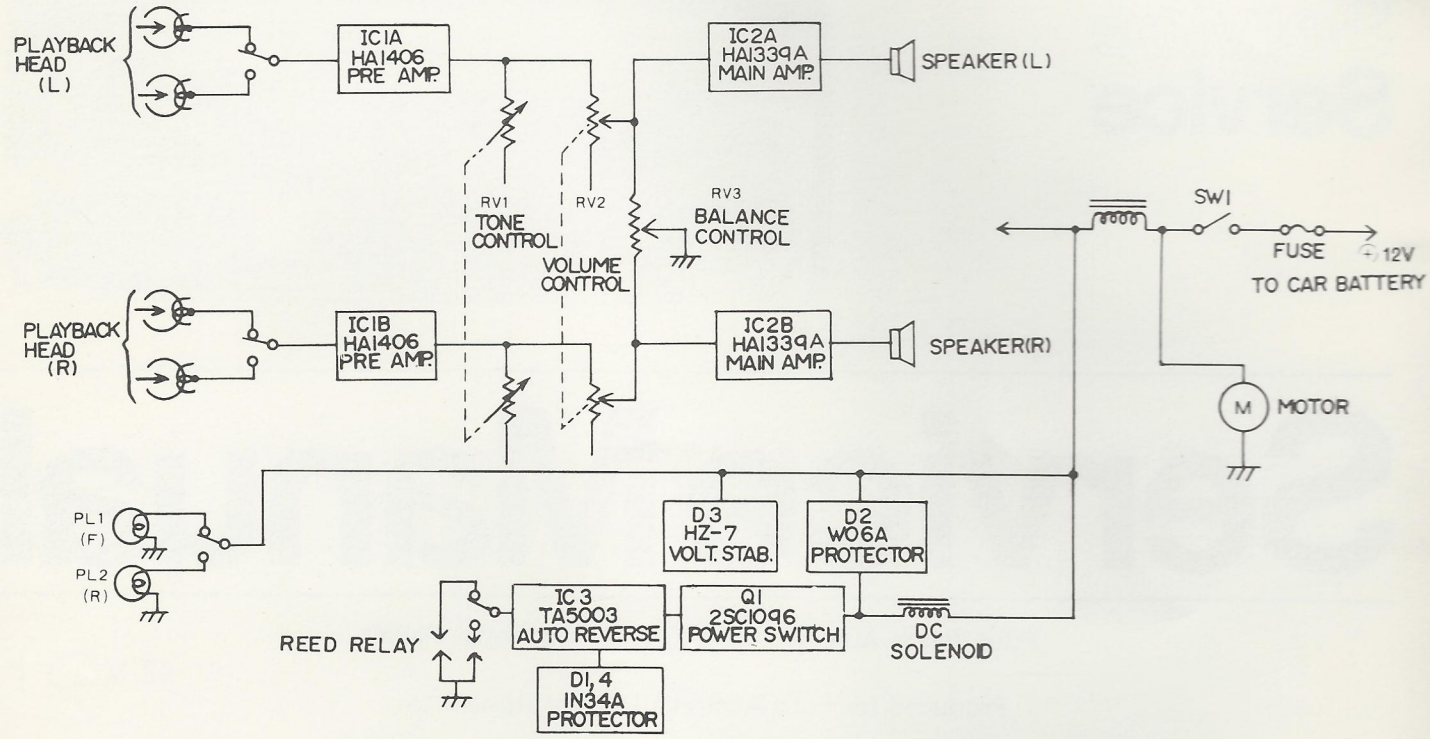

Fig. 1

MECHANICAL OPERATION

1. **Drive System.**
   In this unit a belt/gear drive is used instead of the conventional belt/idler drive. The operating sequences of this system are shown in the block diagrams below.

1) IN PLAYBACK (See Fig. 2)

◁ FORWARD PLAY

MOTOR → FLYWHEEL BELT → FLYWHEEL → TU BELT → TAKE-UP PULLEY → TU GEAR → TURNTABLE GEAR → TAPE TAKE-UP

FLYWHEEL → CAPSTAN → PINCH ROLLER → TAPE START

▷ REVERSE PLAY

MOTOR → FLYWHEEL BELT → FLYWHEEL → TU BELT → TAKE-UP PULLEY → TU GEAR → IDLER GEAR → TURNTABLE GEAR → TAPE TAKE-UP

FLYWHEEL → CAPSTAN → PINCH ROLLER → TAPE START

2) IN FAST FORWARD (See Fig. 3)

◁ ◁ FORWARD F.F

▷ ▷ REVERSE F.F

MOTOR → FLYWHEEL BELT → FLYWHEEL → IDLER B → IDLER A → TURNTABLE → TAPE TAKE-UP

Con . p.3

2. **Auto Reverse Mechanism** (refer to fig. 2)

When the tape is fully wound, the turntable stops revolving and this causes the Reed Relay circuit to operate the solenoid plunger as follows:–

(i) Tape end during Play (forward or reverse).

a. The solenoid plunger moves the changeover cam in the direction of the arrow (1).

b. The changeover slider moves in the direction of the arrow (2) and causes the RH and LH pinchroller arms to pivot. The RH pinchroller is released from the capstan and the LH pinchroller is pressed against the capstan.

c. The take-up arm springs cause the take-up arm to move in the direction of the arrow (3). The take-up gear disengages from the idler gear and engages with the left turntable gear. Play direction is thus reversed.

(ii) Tape End during FF (refer to fig. 3).

a. The solenoid is activated moving the FF lock plate in the direction of the arrow (1) thus releasing the left FF slider.

b. The left FF slider and left FF arm move in the direction of the arrow (2). The pressures between the left flywheel and idler "B" and the turntable and idler "A" are released.

c. The FF function plate and FF slider move in the direction of the arrow (3).

d. The head plate moves, and the take-up gear engages the turntable in the forward direction play mode. The solenoid then operates again to engage the reverse direction play mode.

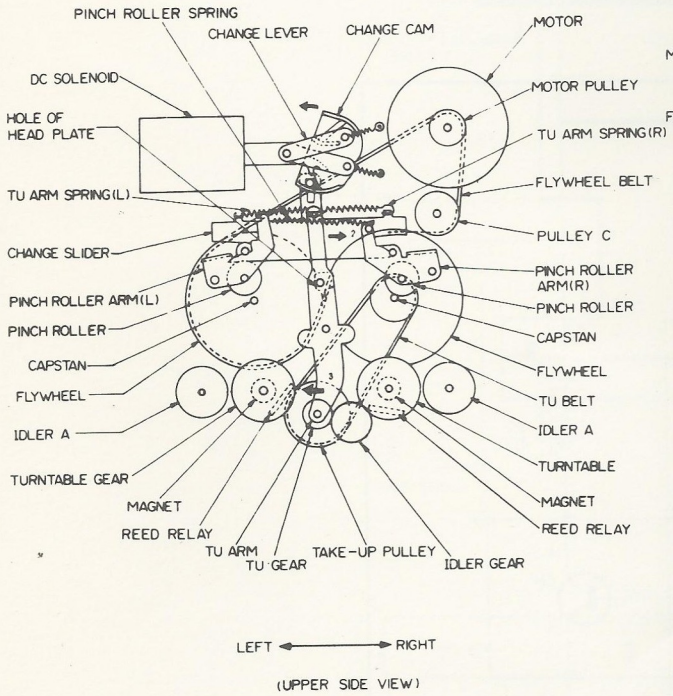

Fig. 2

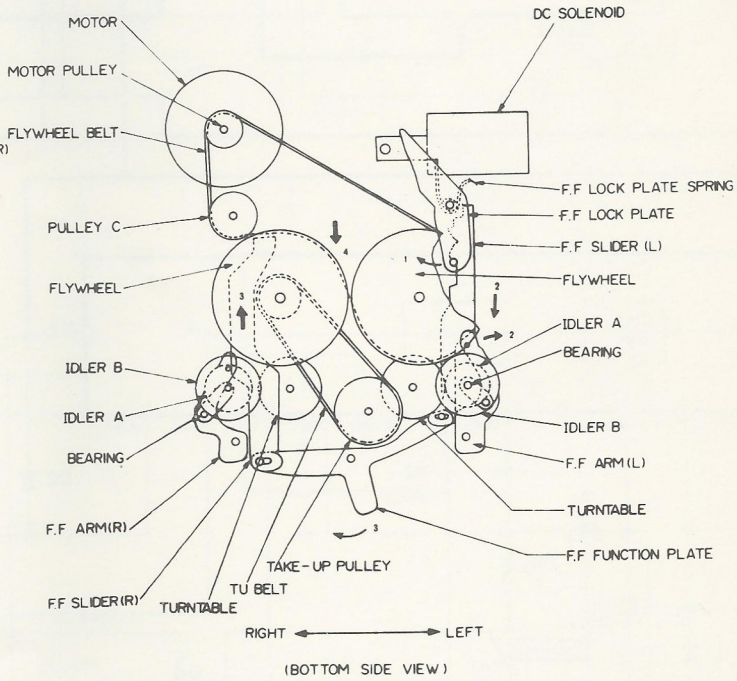

Fig. 3

DISASSEMBLY

1. Removal of escutcheon (See Fig. 4)

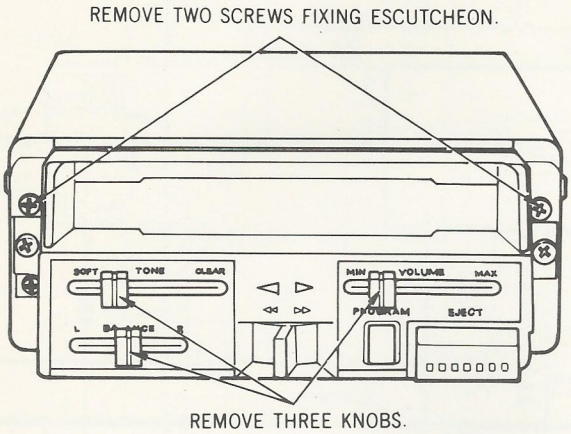

Fig. 4

2. Removal of upper cover (See Fig. 5)

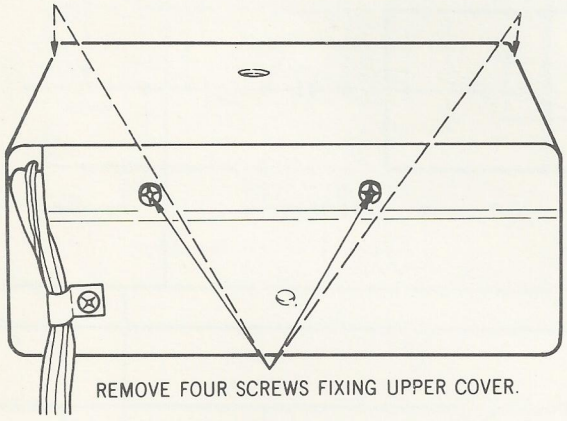

Fig. 5

3. Removal of bottom cover (See Fig. 6)

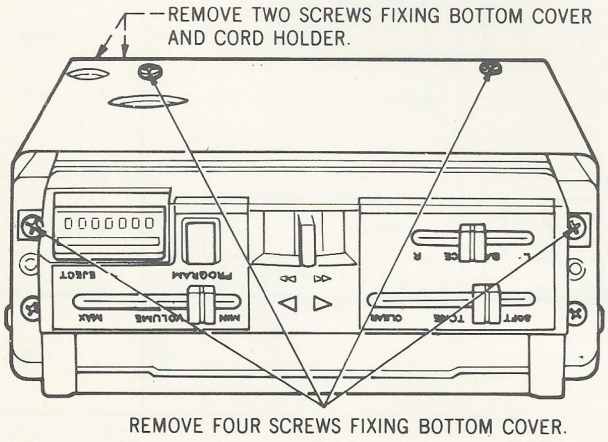

Fig. 6

4. Removal of circuit board (See Fig. 7, 8, 9)

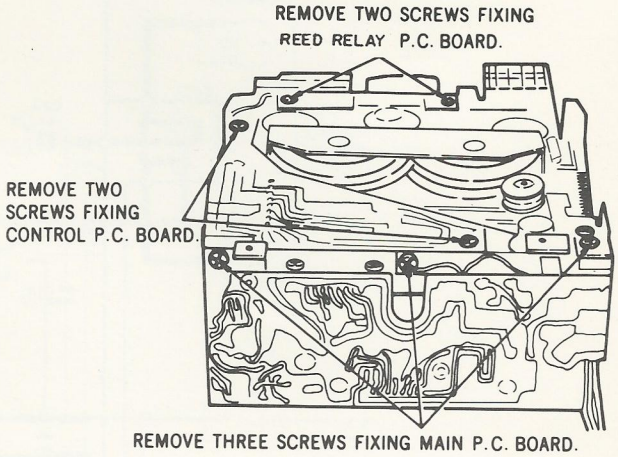

Fig. 7

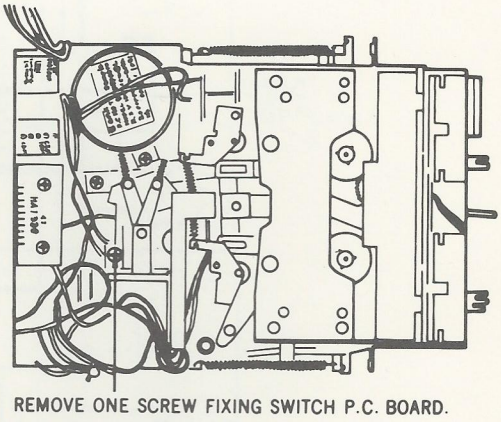

Fig. 8

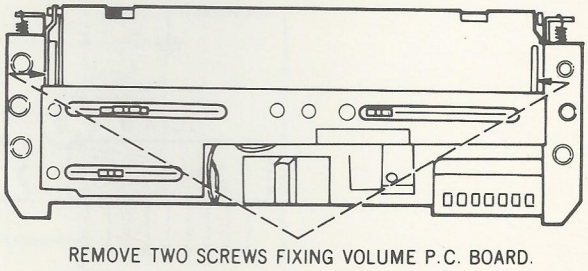

Fig. 9

SCHEMATIC DIAGRAM

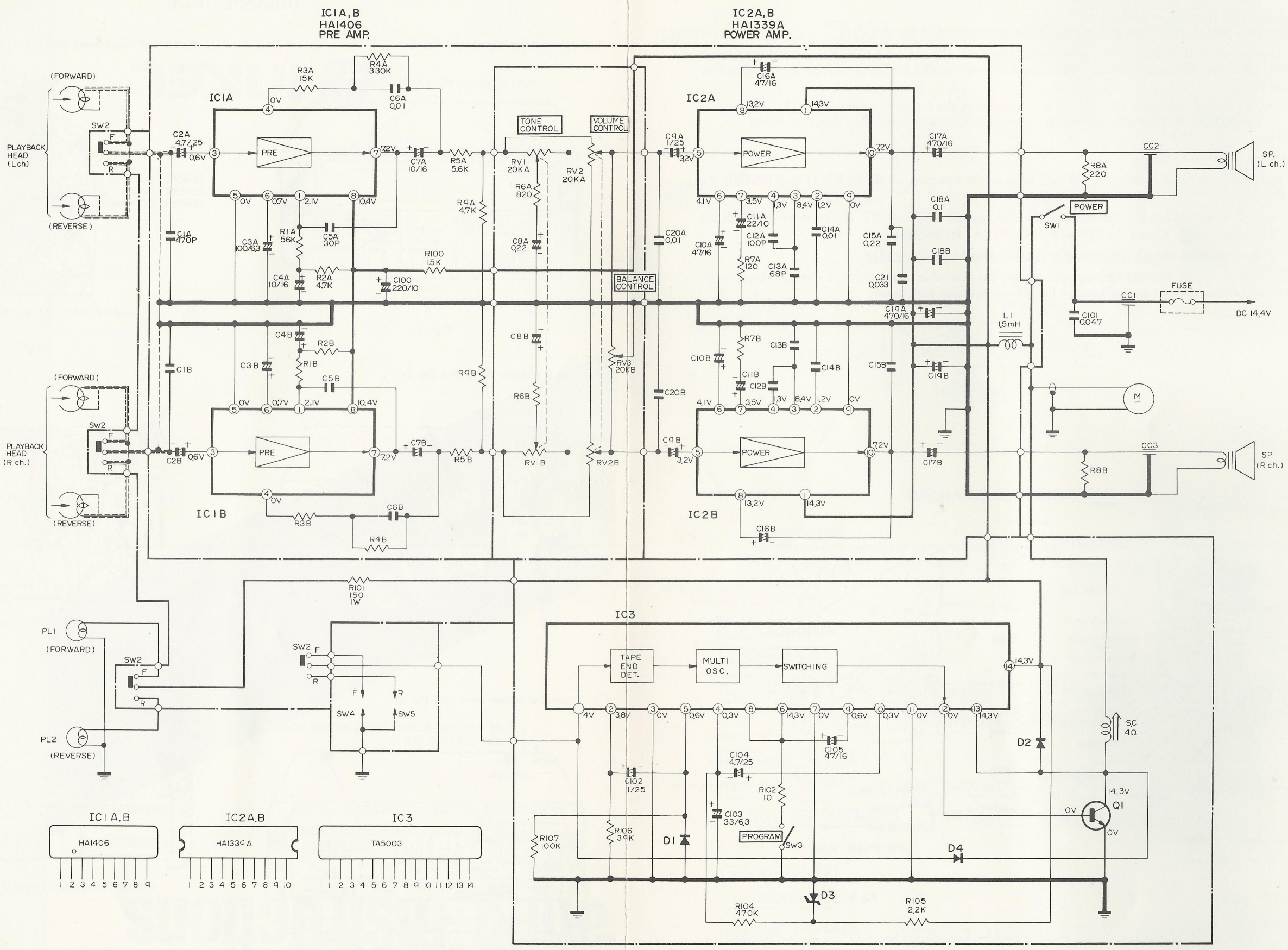

CIRCUIT BOARD DIAGRAM

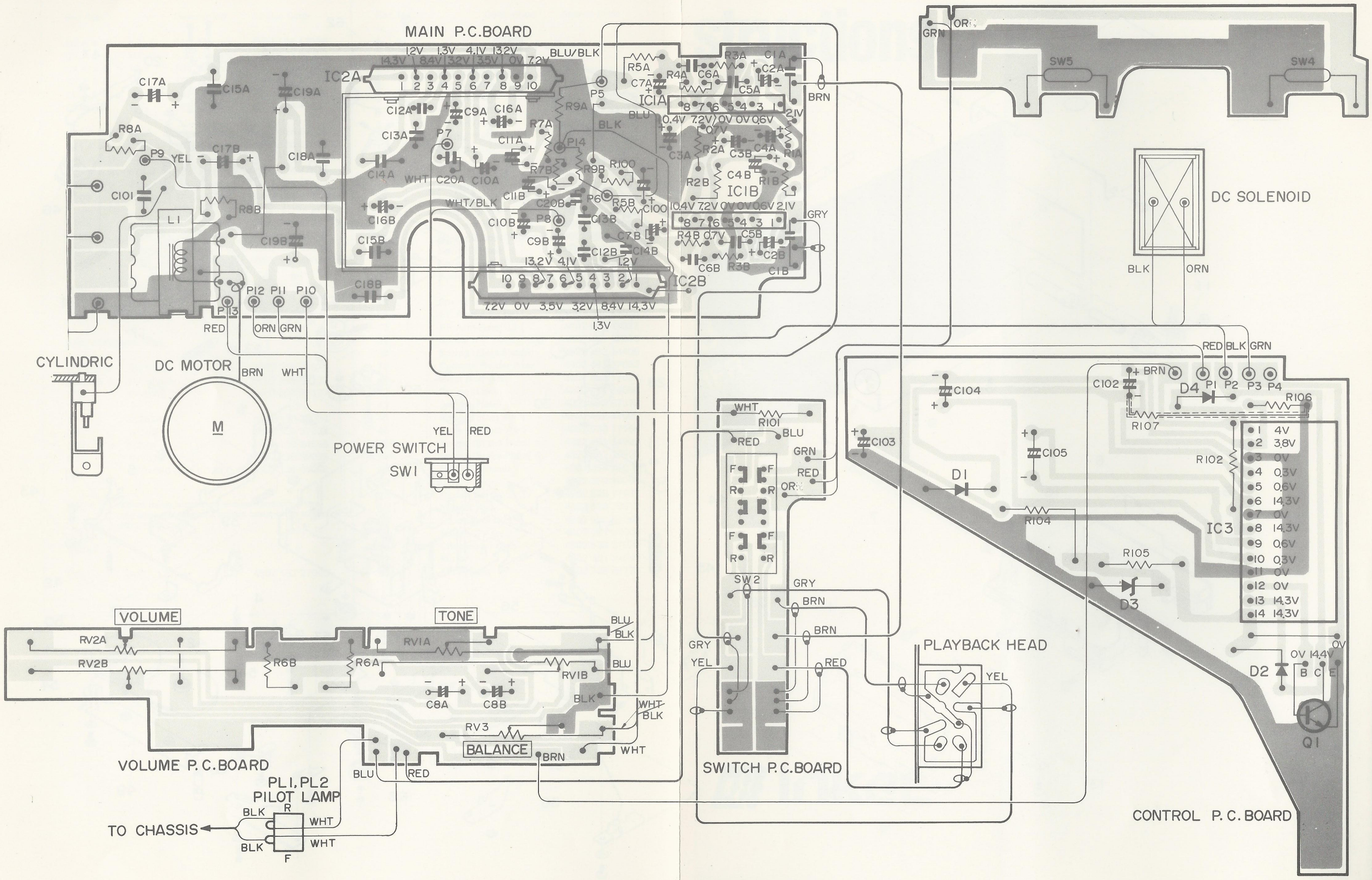

EXPLODED VIEW

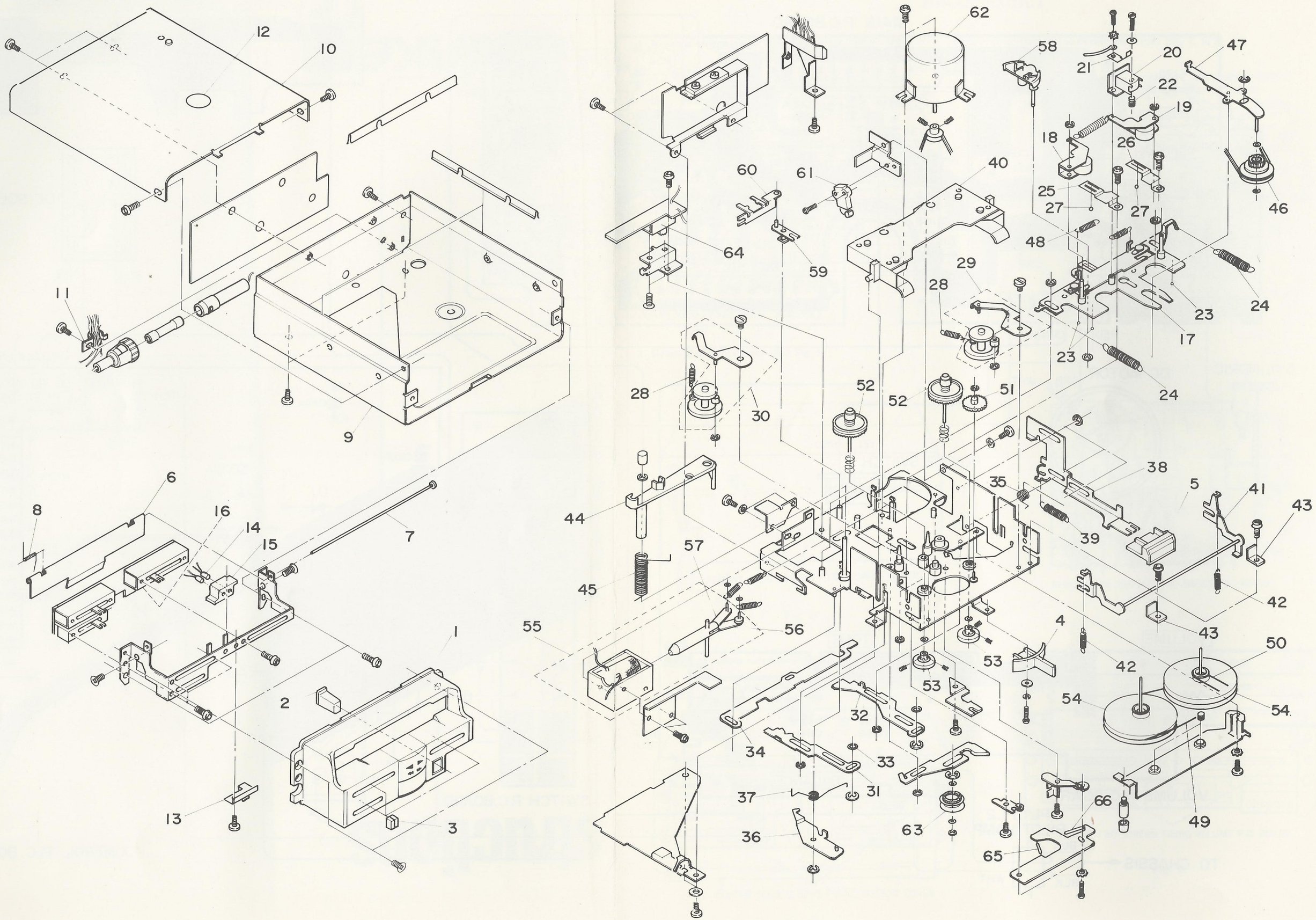

REPLACEMENT PARTS LIST

Ref. No.	Description	Service Code
C2.A & B	4.7μF 25V Electro	4802 124 47034
C3.A & B	100μF 6.3V Electro	4802 124 40753
C4.A & B	10μF 16V Electro	4802 124 47044
C7.A & B	10μF 16V Electro	4802 124 47044
C8.A & B	.22μF 25V Electro	4802 124 47076
C9.A & B	1μF 25V Electro	4802 124 47037
C10.A & B	47μF 16V Electro	4802 124 47025
C11.A & B	22μF 10V Electro	4802 124 47009
C16 A & B	47μF 16V Electro	4802 124 47025
C17 A & B	470μF 16V Electro	4802 124 47024
C19 A & B	470μF 16V Electro	4802 124 47024
C100	220μF 10V Electro	4802 124 47006
C102	1μF 25V Electro	4802 124 47037
C103	33μF 6.3V Electro	4802 124 47058
C104	4.7μF 25V Electro	4802 124 47034
C105	47μF 16V Electro	4802 124 47025
RV1	Tone Control	4802 105 17112
RV2	Vol. Control	4802 105 17112
RV3	Balance Control	4802 105 17111

SEMICONDUCTORS

ICI A & B	HA1406	4802 209 87077
IC2 A & B	HA1339A	4802 209 87137
IC3	TA5003	4802 209 87127
D1	IS2074H	4802 130 37033
D2	WO6A	4802 130 37022
D3	HZ7A	5322 130 34255
D4	IN2076	4822 130 30009
Q1	2SC1096 (Use BD203)	5322 130 44325

*Note: When using substitute semiconductors check the base connections before assembling to the PC board.

COILS

L1	AFC. 1.5mH	4802 152 27005

Ref. No.	Description	Service Code

MECHANICAL

1	Escutcheon Assy	4802 459 57073
2	Button (Programme)	4802 411 57061
3	Knob (Slide)	4802 411 57059
4	Knob. FF/Rew	4802 411 57058
5	Button (Eject)	4802 410 37025
8	Spring (Flap)	4802 492 47036
13	Plate Spring	4802 492 67383
14	Lamp	4802 134 47072
18	Pressure Roller Assy (L)	4802 403 27071
19	Pressure Roller Assy (R)	4802 403 27069
—	Spring for Item 19	4802 492 37172
20	Playback Head	4802 249 37015
21	Spring (Cassette Holder)	4802 492 67382
22	Spring (Head)	4802 492 57028
24	Spring (Head Plate)	4822 492 34011
25	Spring (Head Plate Holder)	4802 492 67381
28	Spring (FF Arm)	4822 492 34036
29	FF Arm Assy (R)	4802 403 47028
30	FF Arm Assy (L)	4802 403 47027
37	Spring (FF Lock Plate)	4802 492 47093
39	Spring (Eject Slider)	4822 492 34406
40	Cassette Holder Assy	4802 443 67052
41	Eject Rod Assy	4802 403 17054
42	Spring (Lock)	4822 492 34066
43	Spring (Plate)	4802 492 67379
45	Spring (Eject Arm)	4802 492 47092
46	Take Up Gear Assy	4802 528 17155
48L	Spring (Brake Plate) L	4822 492 34025
48R	Spring (Brake Plate) R	4822 492 30828
49	Belt (Flywheel)	4802 358 37039
50	Belt	4822 358 30065
52	Clutch Assy	4802 528 17082
53	Magnet Assy	4802 526 27012
54	Flywheel Assy	4802 528 67069
55	Solenoid Assy	4802 281 57009
58	Changeover Cam	4802 528 37025
62	Motor	4802 361 27044
63	Pulley Assy	4802 528 87173

LUBRICATION

Thoroughly clean all moving parts before lubricating the unit. During lubrication be careful not to get oil or grease on the Playback Head, Pressure Roller, Capstan or Drive Belt.

H	MOLYKOTE DX	4822 390 20027
W	SILICON GREASE MS4	4822 390 20023
P	BP SUPER VISCO STATIC 20W/50	4822 390 10069

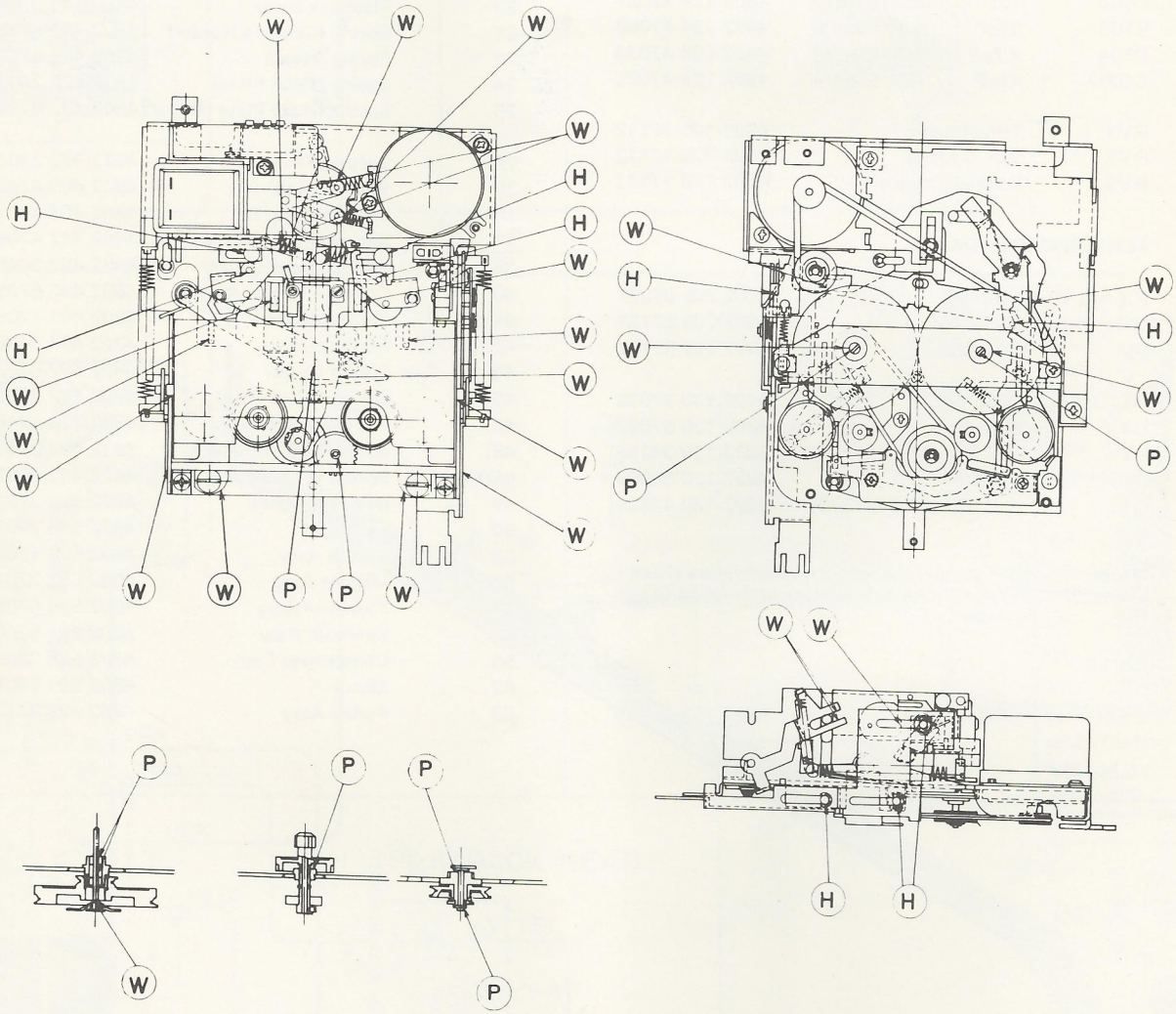

Fig. 10