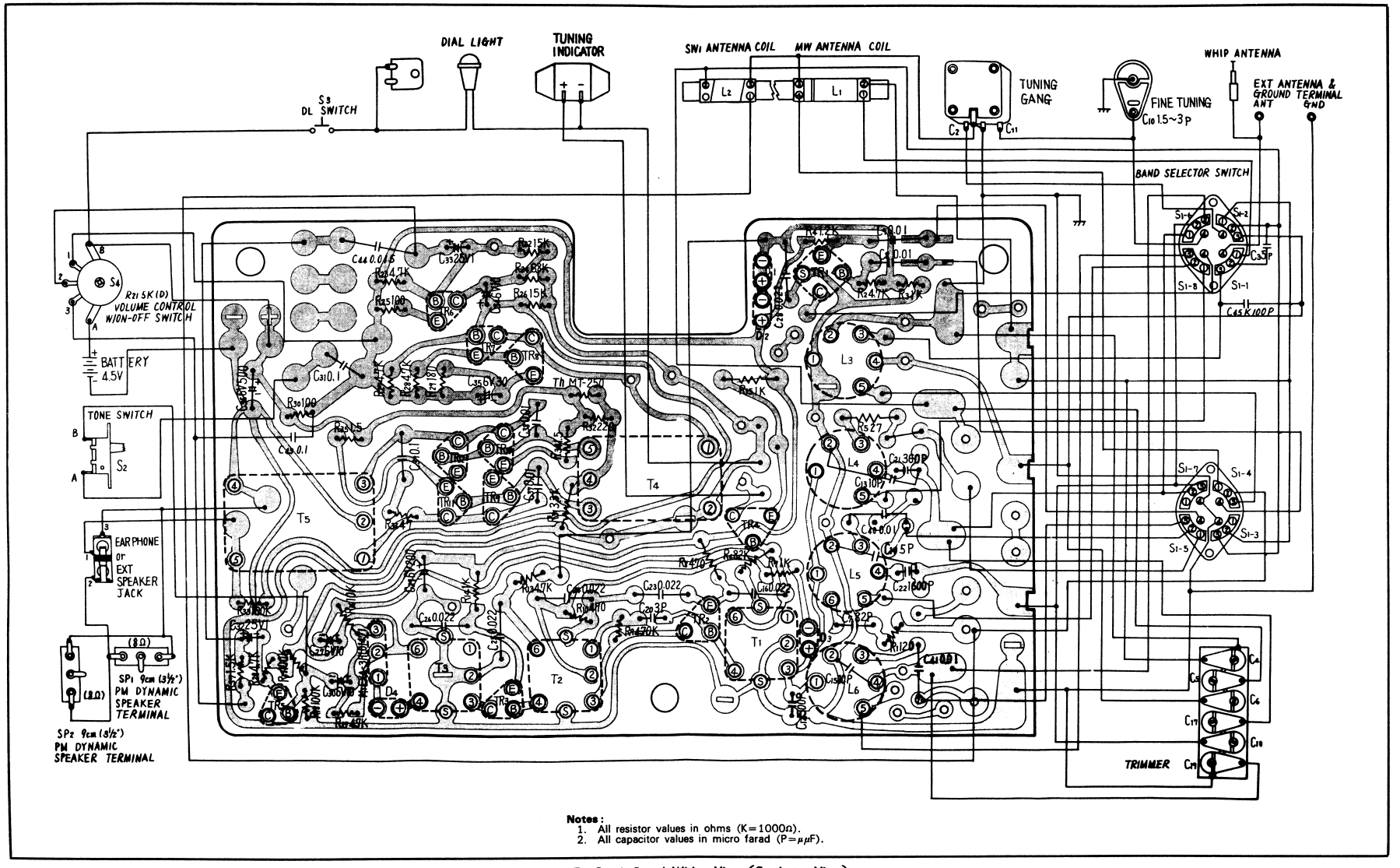

Notes:
1. All resistor values in ohms (K=1000Ω).
2. All capacitor values in micro farad (P=μμF).

Fig. 7 Circuit Board Wiring View (Conductor View).

Notes:
1. Dial cord length is 85cm (33⅝").
2. Tuning gang is positioned at capacity.
3. Arrow marks (1~9) indicate correct order and direction of setting dial cord.
4. Cement dial cord ends.

To Mount Dial Pointer

1. Set tuning gang fully closed position.
2. Set dial pointer to start point of dial back plate.
3. Attach dial cord to dial pointer.

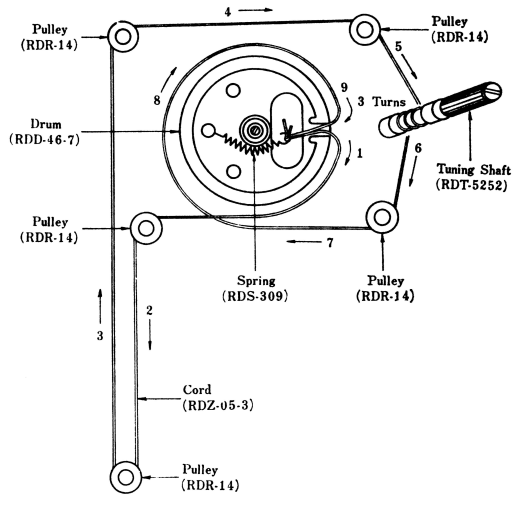

Fig. 3 Dial Cord Stringing Guide.

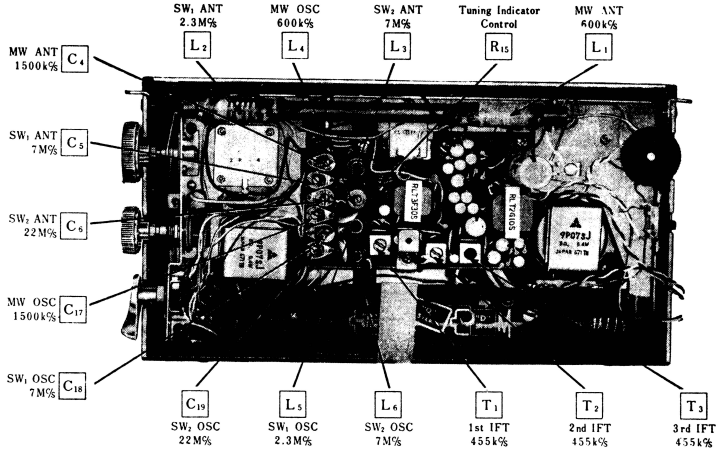

Fig. 4 Top View - Alignment Points.

ALIGNMENT INSTRUCTIONS

FREQUENCY & DISTANCE ON DIAL SCALE

To accurately align proper frequencies to the dial scale, refer to Table and mark the edge of the dial scale plate accordingly using the "Start Point" mark on the dial scale as a reference point.

TABLE

Band	Frequency	Distance from "Start Point"	
MW	600 kc/s	14.7 mm	⅝"
	1500 kc/s	63.5 mm	2½"
SW1	2.3 Mc/s	2.2 mm	1/16"
	7 Mc/s	67.9 mm	2⅝"
SW2	7 Mc/s	2.2 mm	1/16"
	22 Mc/s	67.9 mm	2⅝"

ADJUSTMENT OF TUNING INDICATOR

1. Radio Receiver Setting
   - Set tuning gang to non-interference point (on/about 600 kc/s)
   - Set band selector switch to MW.
   - Set power source voltage to 4.5 V DC.
2. Adjustment Method
   - Adjust 5KΩ potentionmeter (R_{15}) so that the pointer of the tuning indicator stays as shown in Fig. 5.

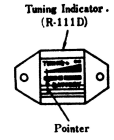

Fig. 5.

IF & RF ALIGNMENT

Output of signal generator should be no higher than necessary to obtain an output reading.
Set volume control to maximum.
Set tone switch to high.
Set fine tuning control to center.
Set power source voltage to 4.5 volts DC.

	Band Switch Position	SIGNAL GENERATOR COUPLING	SIGNAL GENERATOR FREQUENCY	RADIO DIAL SETTING	INDICATOR	ADJUST	REMARKS
1	MW	Fashion loop of several turns of wire and radiate signal into loop of receiver.	455 kc/s (400~ Mod.)	Point of non-interference (on/about 600 kc/s)	Output meter across voice coil.	T_1 (1st IFT) T_2 (2nd IFT) T_3 (3rd IFT)	Adjust for maximum output.
2	MW	〃	600 kc/s (400~ Mod.)	600 kc/s	〃	L_4 (OSC Coil) L_1 (ANT Coil)	Adjust for maximum output by sliding coil (L_1) along ferrite core.
3	MW	〃	1500 kc/s (400~ Mod.)	1500 kc/s	〃	C_{17} (OSC Trimmer) C_4 (ANT Trimmer)	Adjust for maximum output. Repeat steps (2) and (3).
4	SW1	〃	2.3 Mc/s (400~ Mod.)	2.3 Mc/s	〃	L_5 (OSC Coil) L_2 (ANT Coil)	Adjust for maximum output by sliding coil (L_2) along ferrite core.
5	SW1		7 Mc/s (400~ Mod.)	7 Mc/s	〃	C_{18} (OSC Trimmer) C_5 (ANT Trimmer)	Adjust for maximum output by Repeat steps (4) and (5).
6	SW2	Connect to EXT antenna jack through ceramic capacitor (10PF). Common to EXT ground jack.	7 Mc/s (400~ Mod.)	7 Mc/s	〃	L_6 (OSC Coil) L_3 (ANT Coil)	Adjust for maximum output.
7	SW2	〃	22 Mc/s (400~ Mod.)	22 Mc/s	〃	C_{19} (OSC Trimmer) C_6 (ANT Trimmer)	Adjust for maximum output. Repeat steps (6) and (7).

Note: Cement antenna bobbin with wax after completing alignment.

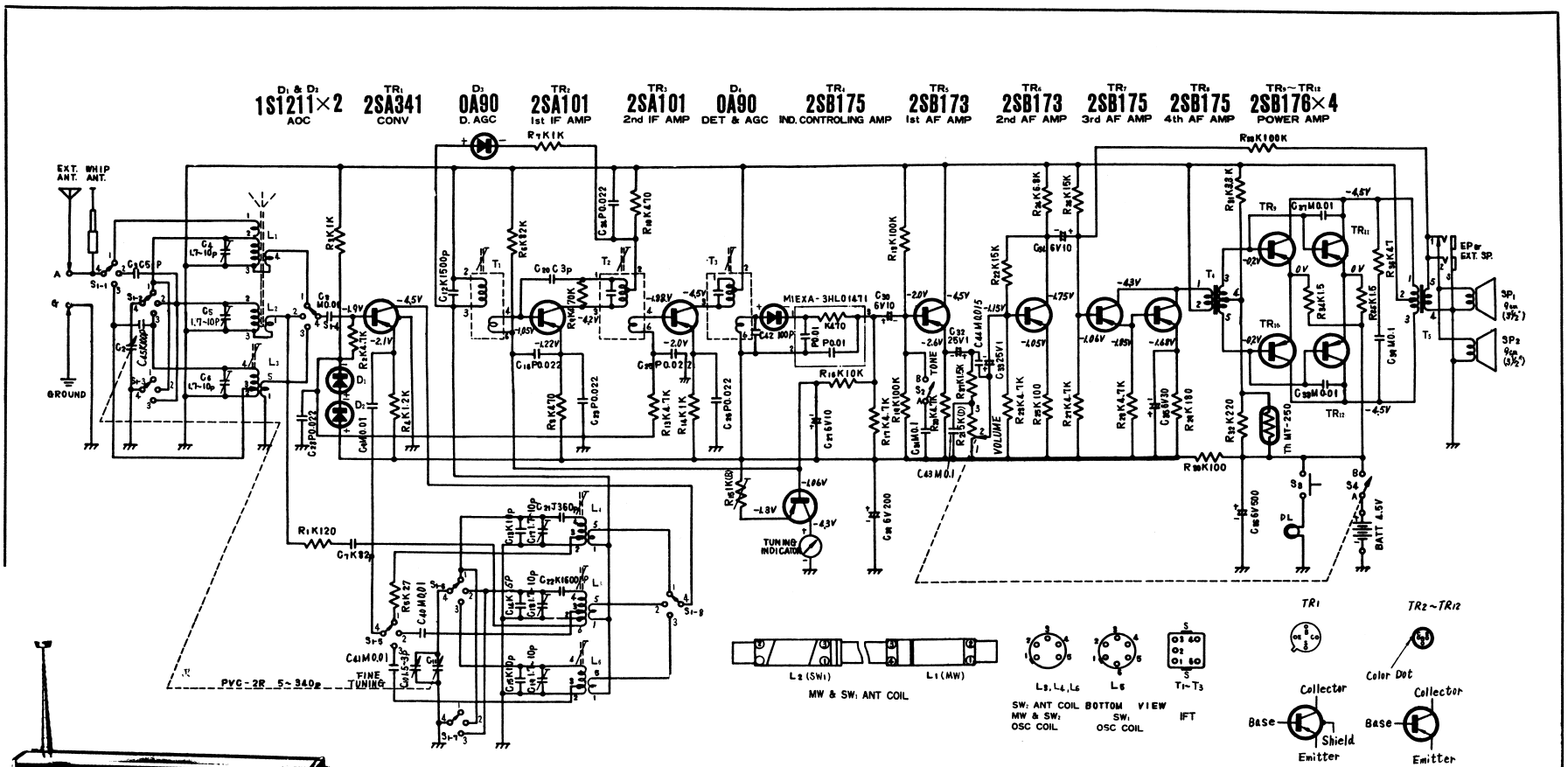

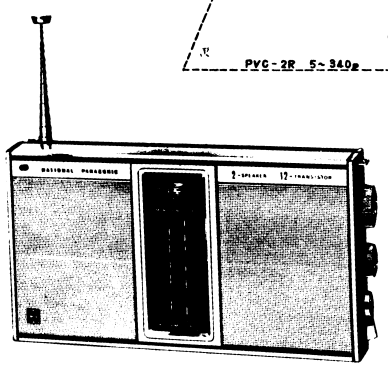

Notes:

1. S_{1-1}~S_{1-8}: Band selector switch in "MW" position.
2. S_2 : Tone switch in "HIGH" position.
3. S_3 : Dial light switch in "OFF" position.
4. S_4 : Power source switch in "OFF" position.
5. DC Voltage measurements are taken with circuit tester (10KΩ/V) from positive terminal of battery.
6. Capital letters (M, K, J, P, C, D) in the circuit diagram show allowable tolerances of resistors and capacitors as follows:
   M=±20% K=±10% J=±5% P=+100% − 0%
   C=±0.25PF D=±0.5PF
7. Battery current: No signal..... 23mA
   Maximum output..... 235mA
8. PF=pico farad=mmf
   μF=micro farad=MF
9. All resistor values in ohms (K=1000Ω).
10. All capacitor values in micro farads (P=μμF).

Fig. 6 Schematic Diagram.

Notes:
1. Dial cord length is 85cm (33⅝").
2. Tuning gang is positioned at capacity.
3. Arrow marks (1~9) indicate correct order and direction of setting dial cord.
4. Cement dial cord ends.

To Mount Dial Pointer

1. Set tuning gang fully closed position.
2. Set dial pointer to start point of dial back plate.
3. Attach dial cord to dial pointer.

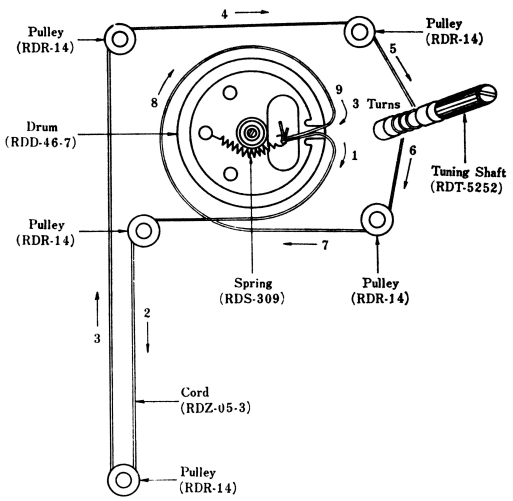

Fig. 3 Dial Cord Stringing Guide.

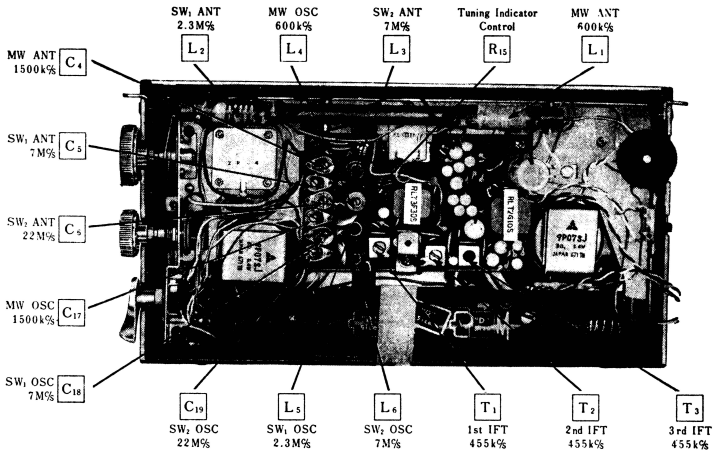

Fig. 4 Top View - Alignment Points.

ALIGNMENT INSTRUCTIONS

FREQUENCY & DISTANCE ON DIAL SCALE

To accurately align proper frequencies to the dial scale, refer to Table and mark the edge of the dial scale plate accordingly using the "Start Point" mark on the dial scale as a reference point.

TABLE

Band	Frequency	Distance from "Start Point"	
MW	600 kc/s	14.7 mm	⅝"
	1500 kc/s	63.5 mm	2½"
SW1	2.3 Mc/s	2.2 mm	⅛"
	7 Mc/s	67.9 mm	2⅝"
SW2	7 Mc/s	2.2 mm	⅛"
	22 Mc/s	67.9 mm	2⅝"

ADJUSTMENT OF TUNING INDICATOR

1. Radio Receiver Setting
   - Set tuning gang to non-interference point (on/about 600 kc/s)
   - Set band selector switch to MW.
   - Set power source voltage to 4.5 V DC.
2. Adjustment Method
   - Adjust 5KΩ potentionmeter (R_{15}) so that the pointer of the tuning indicator stays as shown in Fig. 5.

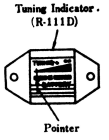

Fig. 5.

IF & RF ALIGNMENT

Output of signal generator should be no higher than necessary to obtain an output reading.
Set volume control to maximum.
Set tone switch to high.
Set fine tuning control to center.
Set power source voltage to 4.5 volts DC.

	Band Switch Position	SIGNAL GENERATOR COUPLING	SIGNAL GENERATOR FREQUENCY	RADIO DIAL SETTING	INDICATOR	ADJUST	REMARKS
1	MW	Fashion loop of several turns of wire and radiate signal into loop of receiver.	455 kc/s (400~ Mod.)	Point of non-interference (on/about 600 kc/s)	Output meter across voice coil.	T_1 (1st IFT) T_2 (2nd IFT) T_3 (3rd IFT)	Adjust for maximum output.
2	MW	〃	600 kc/s (400~ Mod.)	600 kc/s	〃	L_4 (OSC Coil) L_1 (ANT Coil)	Adjust for maximum output by sliding coil (L_1) along ferrite core.
3	MW	〃	1500 kc/s (400~ Mod.)	1500 kc/s	〃	C_{17} (OSC Trimmer) C_4 (ANT Trimmer)	Adjust for maximum output. Repeat steps (2) and (3).
4	SW1	〃	2.3 Mc/s (400~ Mod.)	2.3 Mc/s	〃	L_5 (OSC Coil) L_2 (ANT Coil)	Adjust for maximum output by sliding coil (L_2) along ferrite core.
5	SW1		7 Mc/s (400~ Mod.)	7 Mc/s	〃	C_{18} (OSC Trimmer) C_5 (ANT Trimmer)	Adjust for maximum output by Repeat steps (4) and (5).
6	SW2	Connect to EXT antenna jack through ceramic capacitor (10PF). Common to EXT ground jack.	7 Mc/s (400~ Mod.)	7 Mc/s	〃	L_6 (OSC Coil) L_3 (ANT Coil)	Adjust for maximum output.
7	SW2	〃	22 Mc/s (400~ Mod.)	22 Mc/s	〃	C_{19} (OSC Trimmer) C_6 (ANT Trimmer)	Adjust for maximum output. Repeat steps (6) and (7).

Note: Cement antenna bobbin with wax after completing alignment.

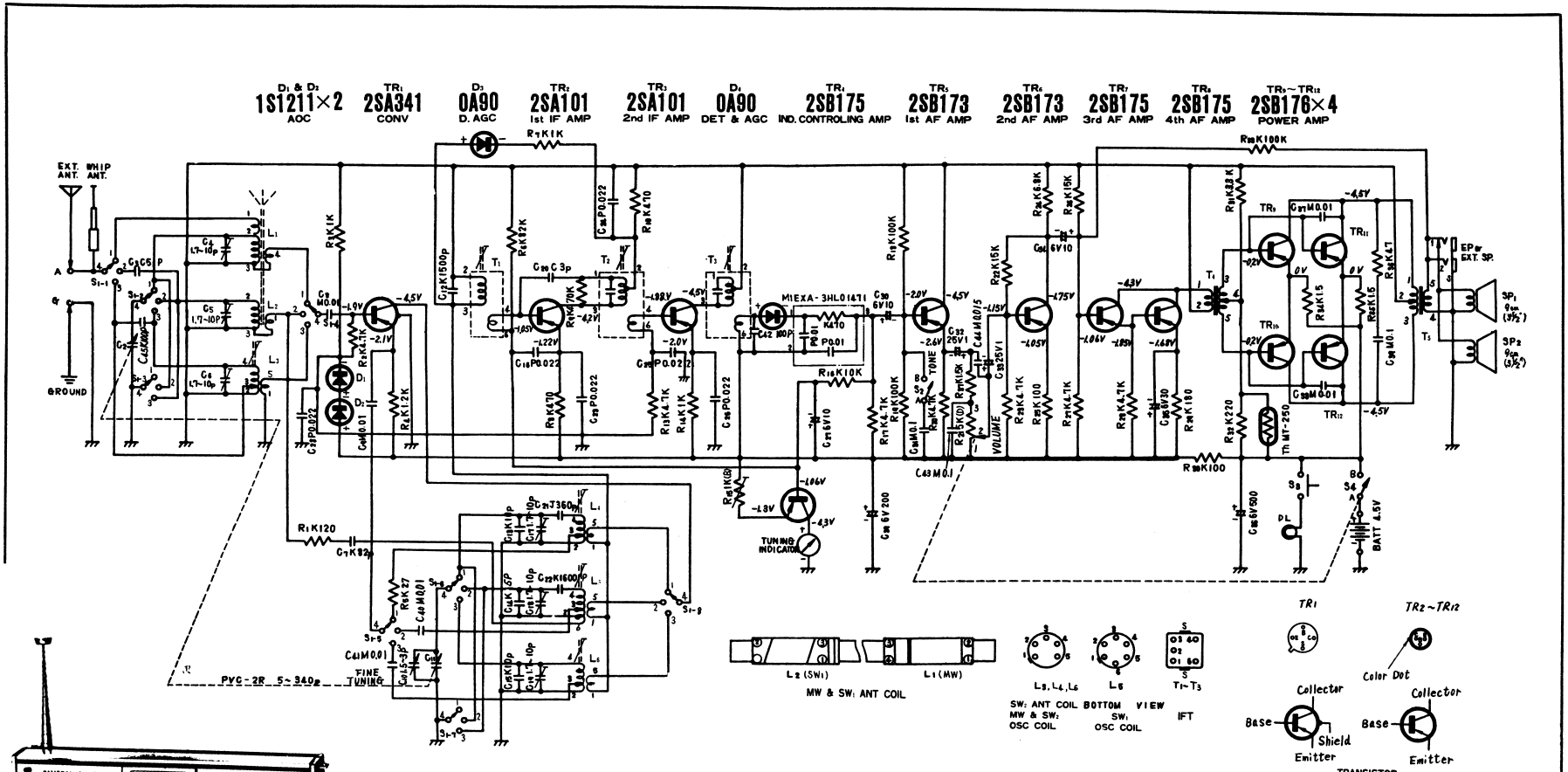

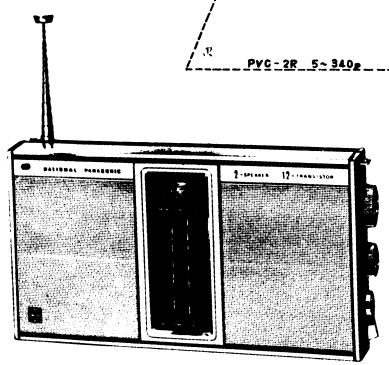

Notes:

1. S1-1~S1-8 : Band selector switch in "MW" position.
2. S2 : Tone switch in "HIGH" position.
3. S3 : Dial light switch in "OFF" position.
4. S4 : Power source switch in "OFF" position.
5. DC Voltage measurements are taken with circuit tester (10KΩ/V) from positive terminal of battery.
6. Capital letters (M, K, J, P, C, D) in the circuit diagram show allowable tolerances of resistors and capacitors as follows:
   M=±20% K=±10% J=±5% P=+100% − 0%
   C=±0.25PF D=±0.5PF
7. Battery current: No signal..... 23mA
   Maximum output..... 235mA
8. PF=pico farad=mmf
   μF=micro farad=MF
9. All resistor values in ohms (K=1000Ω).
10. All capacitor values in micro farads (P=μμF).

Fig. 6 Schematic Diagram.

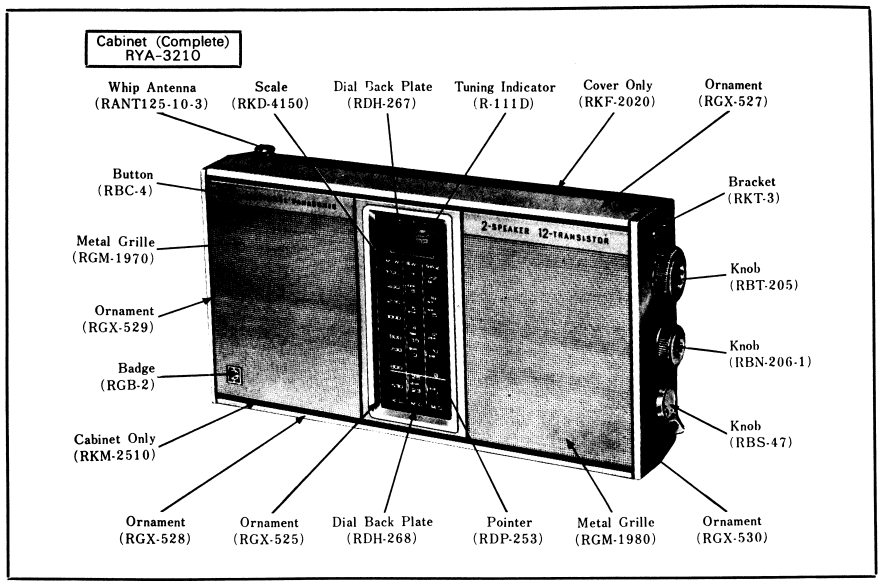

Fig. 1 Cabinet & Appearance - Parts Identification.

Notes:

1. Dial cord length is 85cm (33½).
2. Tuning gang is positioned at capacity.
3. Arrow marks (1~9) indicate correct order and direction of setting dial cord.
4. Cement dial cord ends.

To Mount Dial Pointer

1. Set tuning gang fully closed position.
2. Set dial pointer to start point of dial back plate.
3. Attach dial cord to dial pointer.

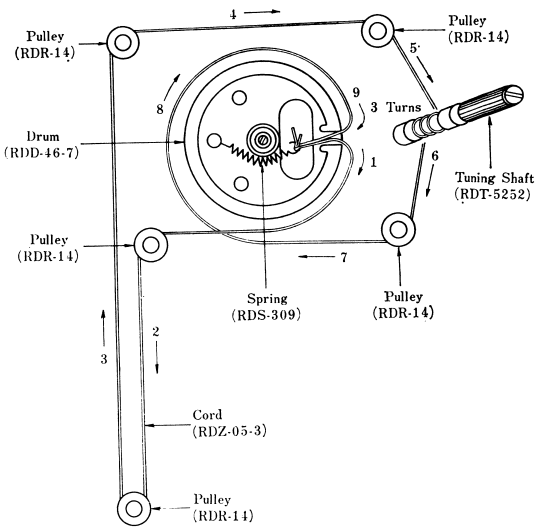

Fig. 3 Dial Cord Stringing Guide.

To Remove Chassis (Refer to Fig. 2)

1. Remove cabinet back cover mounting screw.
2. Remove seven (7) red chassis mounting screws, Nos. 1~7, as illustrated in Fig. 2.
3. To remove chassis completely, unsolder leadwires to speaker, dial light switch and EXT antenna & ground jack terminals.
4. To reassemble, reverse the above procedure.

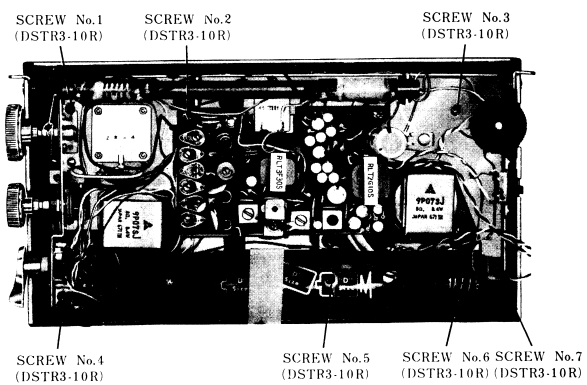

Fig. 2 Top View - Disassembly Points.

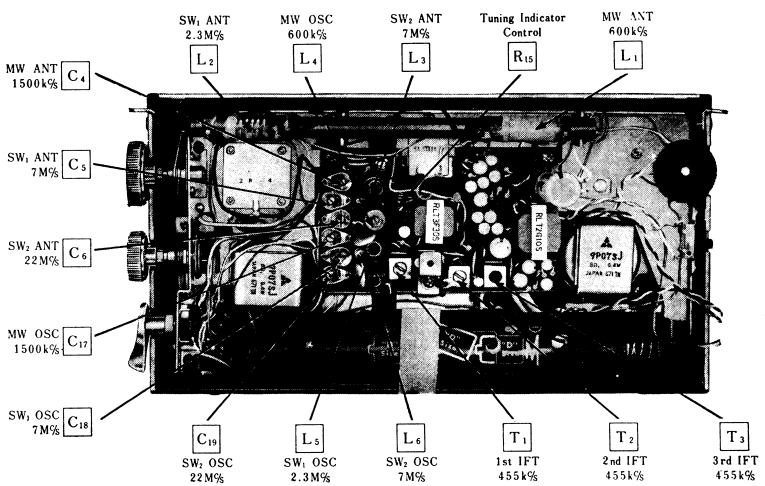

Fig. 4 Top View - Alignment Points.

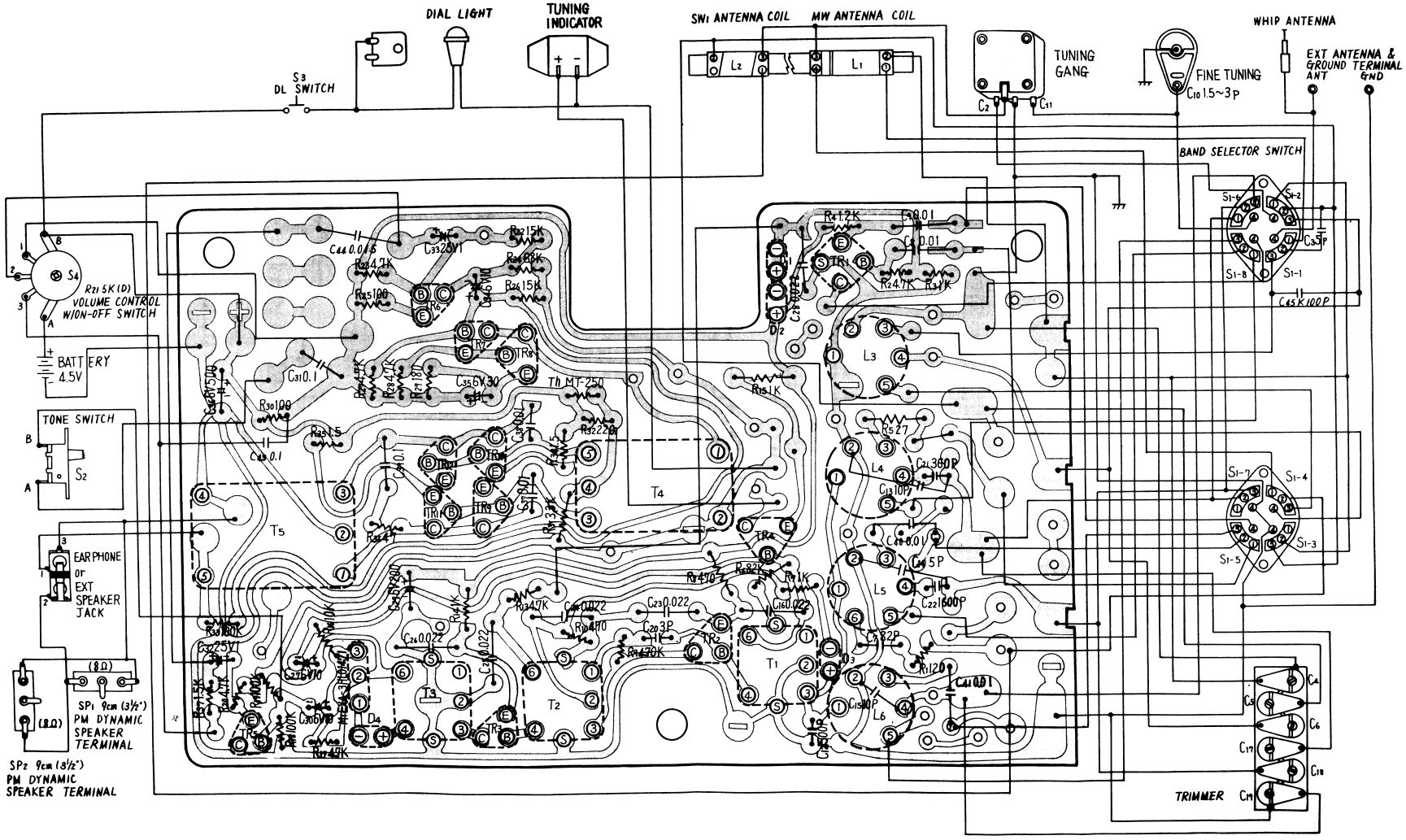

Notes:
1. All resistor values in ohms (K=1000Ω).
2. All capacitor values in micro farad (P=μμF).

Fig. 7 Circuit Board Wiring View (Conductor View).

NATIONAL MODEL R-357 N150

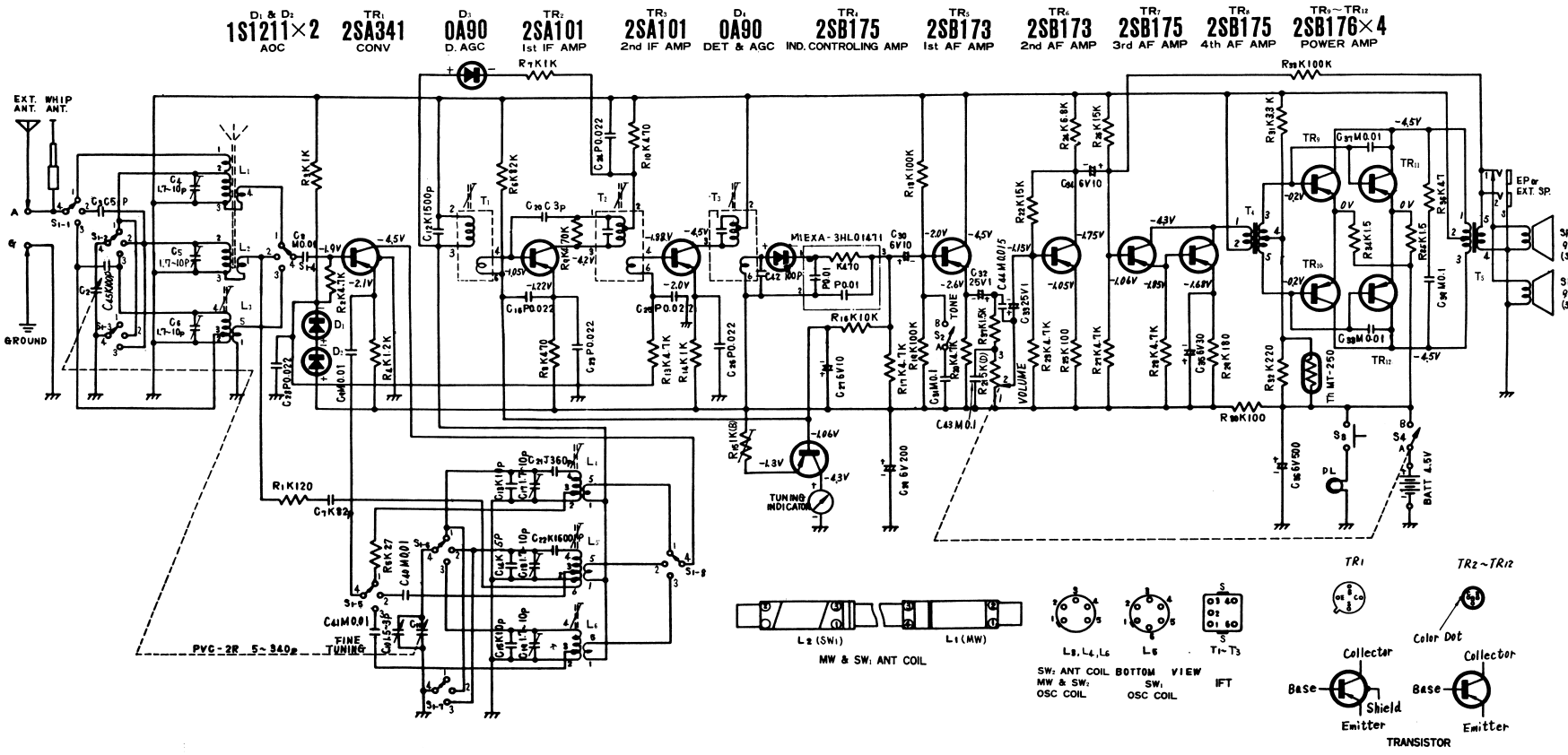

Notes:

1. S_{1-1}~S_{1-8} : Band selector switch in "MW" position.
2. S_2 : Tone switch in "HIGH" position.
3. S_3 : Dial light switch in "OFF" position.
4. S_4 : Power source switch in "OFF" position.
5. DC Voltage measurements are taken with circuit tester (10KΩ/V) from positive terminal of battery.
6. Capital letters (M, K, J, P, C, D) in the circuit diagram show allowable tolerances of resistors and capacitors as follows:
   M=±20% K=±10% J=±5% P=+100%
   C=±0.25PF D=±0.5PF − 0%
7. Battery current: No signal..... 23mA
   Maximum output..... 235mA
8. PF=pico farad=mmf
   μF=micro farad=MF
9. All resistor values in ohms (K=1000Ω).
10. All capacitor values in micro farads (P=μμF).

Fig. 6 Schematic Diagram.

NATIONAL PANASONIC
Service Manual

3-BAND 12-TRANSISTOR PORTABLE RADIO

MODEL R-357

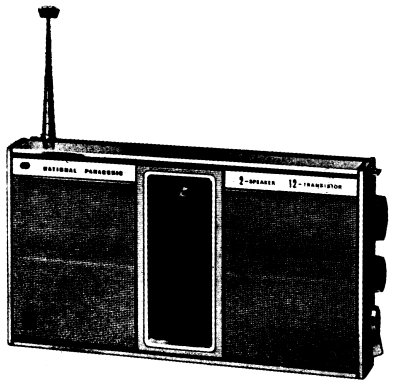

SPECIFICATIONS

Frequency Range:	MW 525~1605 kc/s (571~187m) SW1 2.3~7 Mc/s (130~42.9m) SW2 7~22 Mc/s (42.9~13.6m)	Diodes:	1S1211, 1S1211 Operation Compensator OA90 D. AGC OA90 Detector & AGC
Intermediate Frequency:	455 kc/s	Sensitivity:	MW 70μV/m for 50mW Output SW1 50μV/m for 50mW Output SW2 50μV/m for 50mW Output
Transistors:	2SA341 Converter 2SA101 1st IF Amplifier 2SA101 2nd IF Amplifier 2SB175 Indicator Controling Amplifier 2SB173 1st AF Amplifier 2SB173 2nd AF Amplifier 2SB175 3rd AF Amplifier 2SB175 4th AF Amplifier 2SB176, 2SB176, 2SB176, 2SB176 Power Amplifier (Parallel push-pull)	Power Output:	400mW Undistorted 700mW Maximum
		Batteries:	4.5V (Three "D" size flashlight batteries) (NATIONAL UM-1 or equivalent)
		Speakers:	Two 9cm (3½") PM Dynamic Speaker, 8Ω
		Cabinet Dimensions:	272 (Wide) × 145 (High) × 59 (Deep) mm (10 9/32" × 5 23/32" × 2 5/16")
		Weight:	1.5kg. (3 lb. 5 oz.) with Batteries

MODEL R-357

ALIGNMENT INSTRUCTIONS

FREQUENCY & DISTANCE ON DIAL SCALE

To accurately align proper frequencies to the dial scale, refer to Table and mark the edge of the dial scale plate accordingly using the "Start Point" mark on the dial scale as a reference point.

TABLE

Band	Frequency	Distance from "Start Point"	
MW	600 kc/s	14.7 mm	19/32"
	1500 kc/s	63.5 mm	2½"
SW1	2.3 Mc/s	2.2 mm	3/32"
	7 Mc/s	67.9 mm	2 21/32"
SW2	7 Mc/s	2.2 mm	3/32"
	22 Mc/s	67.9 mm	2 21/32"

ADJUSTMENT OF TUNING INDICATOR

1. Radio Receiver Setting
   - Set tuning gang to non-interference point (on/about 600 kc/s)
   - Set band selector switch to MW.
   - Set power source voltage to 4.5 V DC.
2. Adjustment Method
   - Adjust 5KΩ potentionmeter (R_{15}) so that the pointer of the tuning indicator stays as shown in Fig. 5.

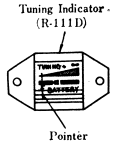

Fig. 5.

IF & RF ALIGNMENT

Output of signal generator should be no higher than necessary to obtain an output reading.
Set volume control to maximum.
Set tone switch to high.
Set fine tuning control to center.
Set power source voltage to 4.5 volts DC.

	Band Switch Position	SIGNAL GENERATOR COUPLING	SIGNAL GENERATOR FREQUENCY	RADIO DIAL SETTING	INDICATOR	ADJUST	REMARKS
1	MW	Fashion loop of several turns of wire and radiate signal into loop of receiver.	455 kc/s (400~ Mod.)	Point of non-interference (on/about 600 kc/s)	Output meter across voice coil.	T_1 (1st IFT) T_2 (2nd IFT) T_3 (3rd IFT)	Adjust for maximum output.
2	MW	〃	600 kc/s (400~ Mod.)	600 kc/s	〃	L_4 (OSC Coil) L_1 (ANT Coil)	Adjust for maximum output by sliding coil (L_1) along ferrite core.
3	MW	〃	1500 kc/s (400~ Mod.)	1500 kc/s	〃	C_{17} (OSC Trimmer) C_4 (ANT Trimmer)	Adjust for maximum output. Repeat steps (2) and (3).
4	SW1	〃	2.3 Mc/s (400~ Mod.)	2.3 Mc/s	〃	L_5 (OSC Coil) L_2 (ANT Coil)	Adjust for maximum output by sliding coil (L_2) along ferrite core.
5	SW1	〃	7 Mc/s (400~ Mod.)	7 Mc/s	〃	C_{18} (OSC Trimmer) C_5 (ANT Trimmer)	Adjust for maximum output by Repeat steps (4) and (5).
6	SW2	Connect to EXT antenna jack through ceramic capacitor (10PF). Common to EXT ground jack.	7 Mc/s (400~ Mod.)	7 Mc/s	〃	L_6 (OSC Coil) L_3 (ANT Coil)	Adjust for maximum output.
7	SW2	〃	22 Mc/s (400~ Mod.)	22 Mc/s	〃	C_{19} (OSC Trimmer) C_6 (ANT Trimmer)	Adjust for maximum output. Repeat steps (6) and (7).

Note: Cement antenna bobbin with wax after completing alignment.