NIVICO

No. 1065

SERVICE NOTE

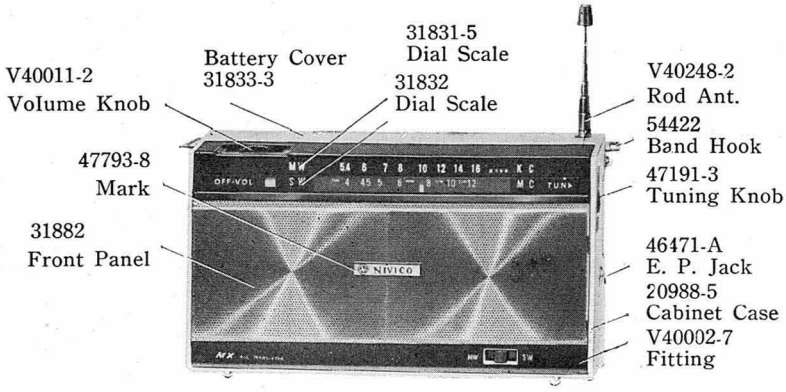

MODEL M·X

8 TRANSISTOR 2 BAND PORTABLE RADIO

DIMENSIONS: H—3 ½″ W—6 ½″ D—1 ¾″ **WEIGHT:** 1.2 lbs. (with batteries)

Note: The parts noted with (I) or (B) depends on the cabinet color, (I) for ivory, and (B) for blue.

SPECIFICATIONS

Frequency Range:	MW 535~1605 KC
	SW 3.9~12MC
Intermediate Frequency:	455KC
Antenna:	Ferrite Core Antenna, Rod Antenna
Transistor:	X_1 2SA103 Converter
	X_2 2SA101 I. F. Amp.
	X_3 2SA101 I. F. Amp.
	X_4 2SA101 Detector & A. G. C.
	X_5 2SB173 A. F. Amp.
	X_6 2SB171 or 2SB175 A. F. Amp.
	$X_{7,8}$ 2SB 172×2 Power Amp.
Thermistor:	Th. MT170 Automatic Temperature Control
Speaker:	2½″ P.M. Speaker
Earphone:	NIVICO Magnetic Type
Power Output:	400mW
Battery:	6V D.C. 1.5V (JIS UM-3, Size ASA Designation "AA" Cell or Equivalent)×4

TO REMOVE CHASSIS (Refer to Fig. 1 & 2)

1. Unscrew the central ⊕ screw on cabinet cover.
2. Turn radio's face upwards, push the upper half of cabinet bottom side with both hands, simultaniously raise it upwards, then cabinet cover will be removed and the interior of set will be exposed as shown in Fig. 2.
3. And then, by removing 4 screws Ⓐ and special screw Ⓑ as indicated in Fig. 2, take the chassis out of the case.

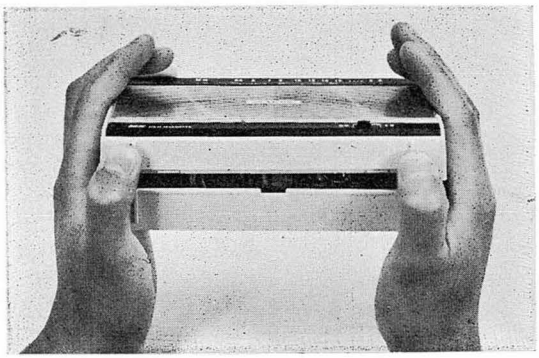

Fig. 1

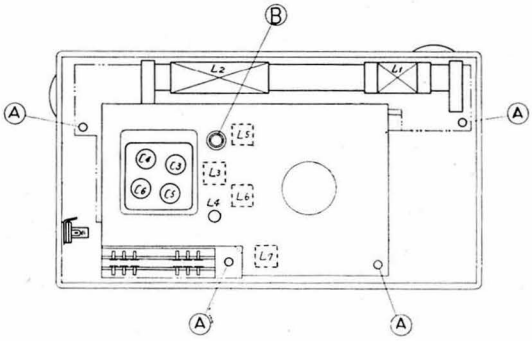

Fig. 2

TO FIT THE DIAL CORD (Refer to Fig. 3)

Fit the cord in accordance with arrow marks, setting variable capacitor on minimum capacity.

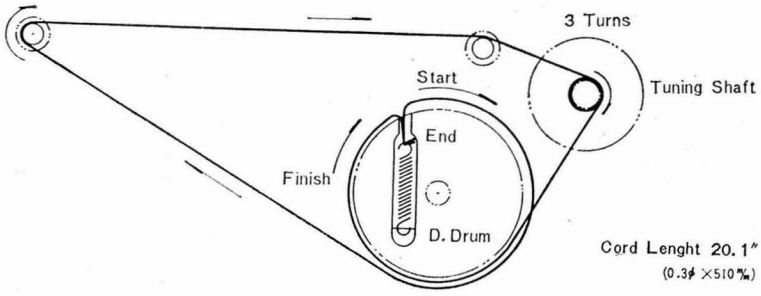

Fig. 3

TO ALIGN SET (Refer to Fig. 4)

Set as follows previously.

Power Source: D. C. 6V (Battery)

Volume Control: Maximum

Input Signal: Test oscillator modulated to 1000 c/s 30 %.

Output Measuring: Connect to secondary terminal (8Ω) of output transformer or voice coil terminal of speaker and align the set according to the following chart, keeping the output level on 10mW (0.28V/8Ω).

Step	Band Switch	Input Signal		Places to be aligned	Location of V. Capacitor
		Frequency	It is given to		
1	MW	455KC	X_1 Base through 0.01μF	L5, 6, 7,	Min. Capacitor
2		Repeat the step No. 1			
3	MW	525KC	Loop Antenna	L 3	Max. Cap.
4		1605KC		C 6	Min. Cap.
5		Repeat the step No. 3, 4			
6		620KC	Loop Antenna	L 1	620KC Signal
7		1400KC		C 4	1400KC Signal
8		Repeat the step No. 6, 7			
9	SW	3.85MC	Loop Antenna	L 4	Max. Cap.
10		13.0MC		C 5	Min. Cap.
11		Repeat the step No. 9, 10			
12		4MC	Loop Antenna	L 2	4MC Signal
13		11MC		C 3	11MC Signal
14		Repeat the step No. 12, 13			

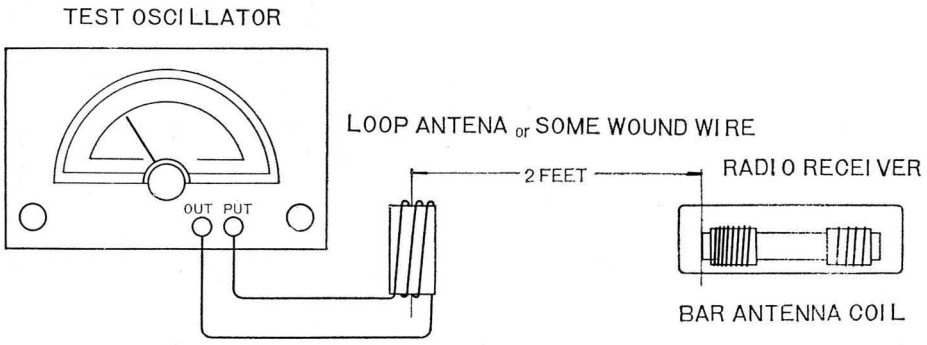

Matual position of each the antenna when alignment.

Fig. 4

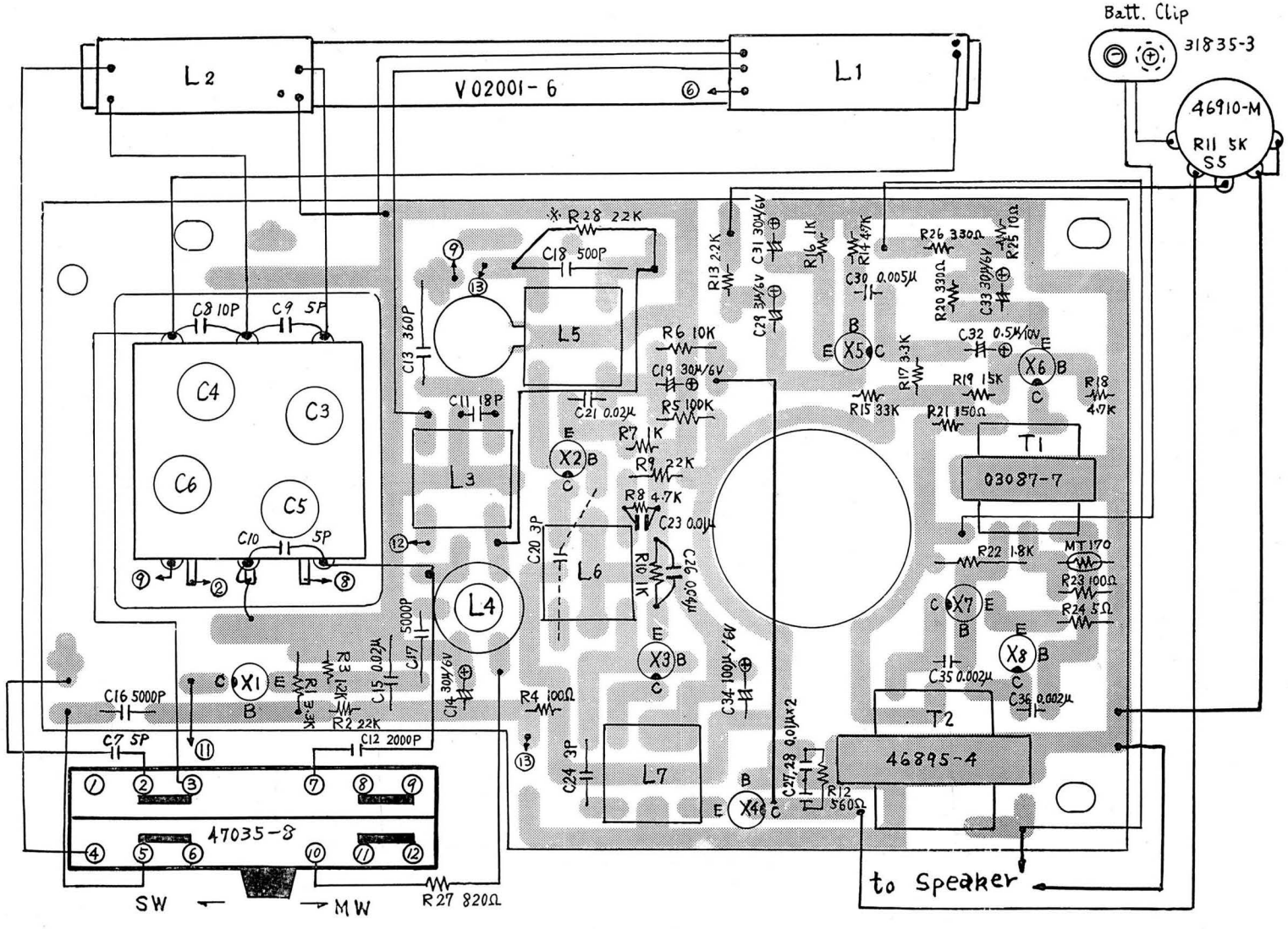

Fig. 5 Parts Arrangement & Wiring.

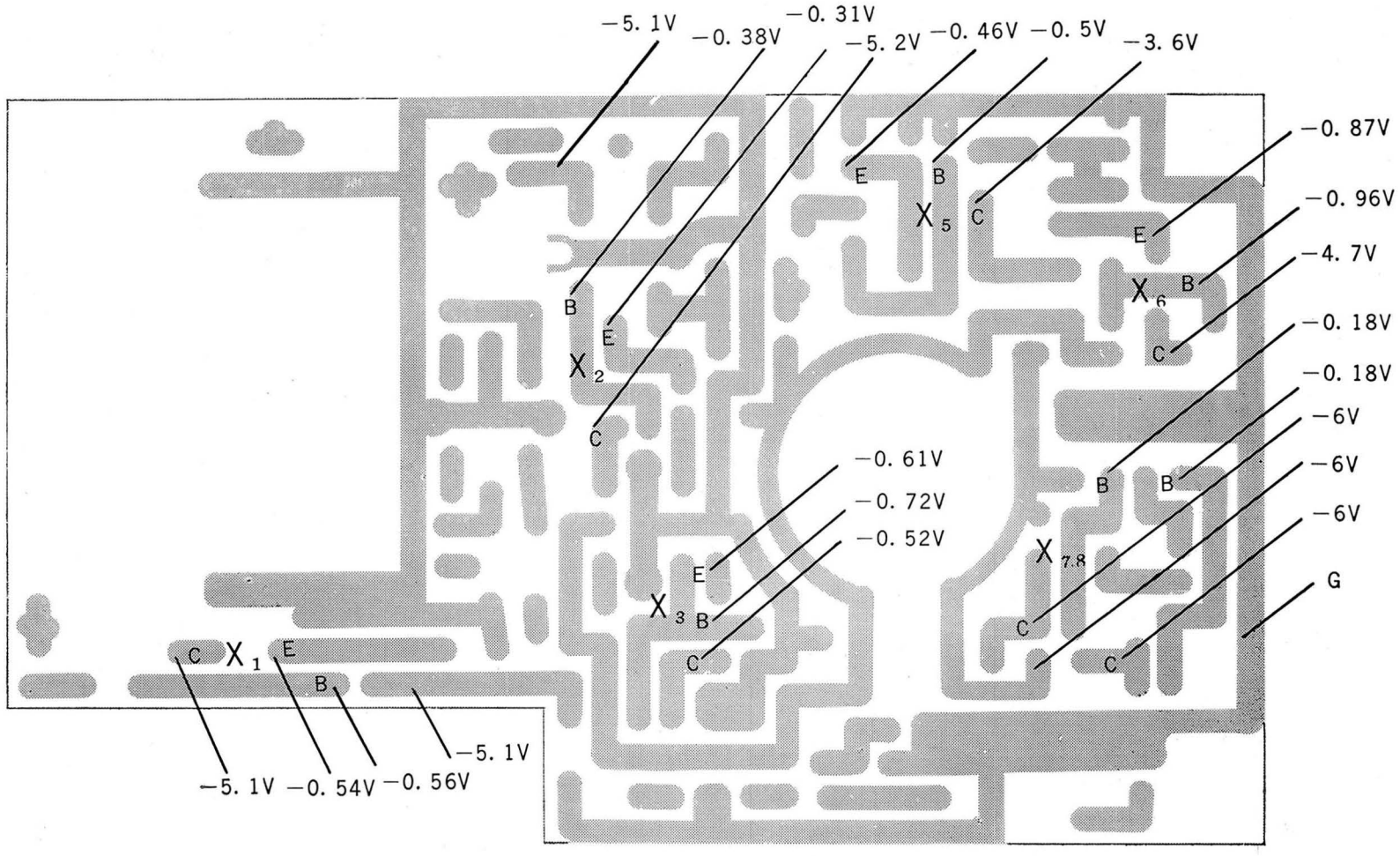

Voltages are negative to the G at non-signal.
Source Voltage: D. C. 6V

Fig. 6 Main Print Circuit Voltages

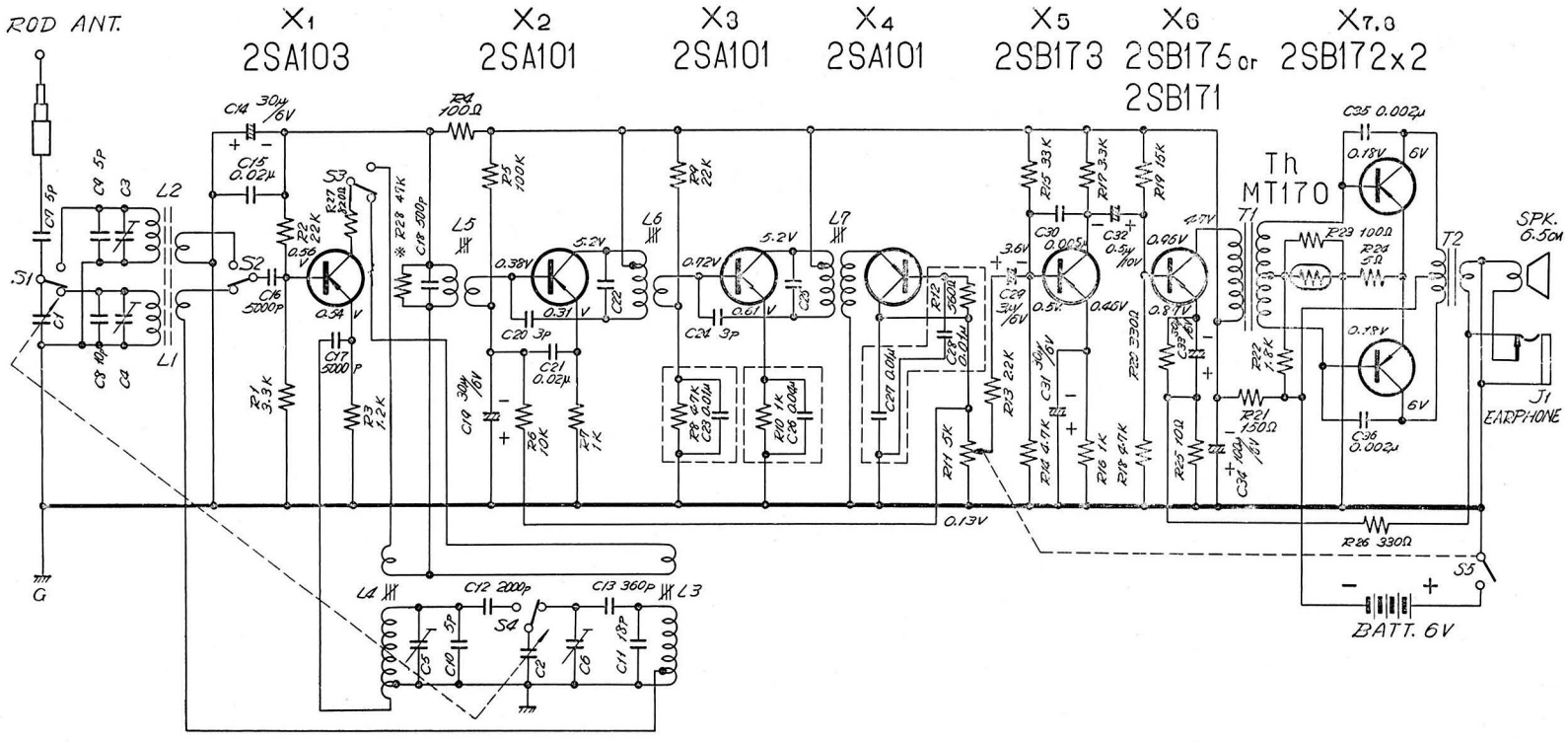

Note:
1. Schematic Diagram is shown in "MW" reception.
2. Each voltage is measured in non-signal and is negative to G potential.
3. $S_1 \sim_4$ is a gang switch.
4. ※ R_{28} is to be aligned.
5. Last number : R_{28}. C_{36}.

Schematic Diagram Model M・X

Subject to change without notice

Main Parts List for Replacement

Resistors & Capacitors

Parts No.	Parts Name	Description
Resistors		
※46912–	Carbon Resistors	(1/8 W, Resistance allowance ; ±10%) $R_{1\sim 7, 9, 13\sim 27}$
46910–M	Variable Resistor	R_{11} S_5 1/20W 5K± 20%
CR Blocks		
03126–3	CR Block	R_{10} 1/10W 1K±20%, C_{26} 0.04μF +80% −20%
〃 –4	〃	R_8 1/10W 4.7K±10%, C_{23} 0.01 μF +80% −20%
〃 –5	〃	R_{12} 1/10W 560Ω±10%, $C_{27, 28}$ 0.01μF +80% −20%
Capacitors		
03077–8	Variable Capacitor	$C_{1\sim 6}$ (Cap. 6~340PF)
※Q04305–	Ceramic Capacitors	$C_{7\sim 11, 20, 24}$
※Q46961–	〃 〃	$C_{13, 18}$ (Cap. allowance ±3%)
※Q46962–	〃 〃	$C_{15\sim 17, 21}$ (+100%,−0%)
Q04314–2000	Polyethylene Capacitor	C_{12} (2000pF±3%)
※04307–	Mylar Capacitors	$C_{30, 35, 36}$ (±20%)
※Q03133–	Electrolytic Capacitors	$C_{29, 34}$ (Working voltage: 6V)
Q03134–30	〃 〃	$C_{14, 19, 31, 33}$ (30μF/6V)
Q03135–0.5	〃 〃	C_{32} (0.5μF/10V)

Note : When you request the parts marked with ※, inscribe these resistance or capacitance value in addition to the head number. (For example : 46912–4.7K)

Parts No.	Parts Name	Description
Antennas		
V40248-2	Rod Antenna	
V02001-6	Bar Antenna	$L_{1,2}$
54349	Bar Antenna Holder	Left
54350	〃 〃	Right
Cabinet		
31833-3	Battery Cover	Ivory
〃 -4	〃 〃	Blue
47442-2	Handle	
V40003-10	Name Plate	
As for the other cabinet parts, refer to the picture in front page.		
Coils & Transformers		
46923-19	MW Oscillator Coil	L_3, Red core
03144-12	SW 〃 〃	L_4,
03064-10	IF Transformer	L_5, Yellow core
03064-2	〃 〃	L_6, C_{22} White core
03064-3	〃 〃	L_7, C_{25} Black core
03087-7	Input Transformer	T_1
46895-4	Output Transformer	T_2
Dial Parts		
47924	Driving Drum	
V40009-A	Dial Needle Ass'y	
53498-3	Dial Spring	In Driving Drum
Speaker		
SK-2116A	2½″ PM Speaker	
Switch		
47035-9	Slide Switch	For MW/SW Selector
Others		
46964-G	Magnetic Earphone Ass'y	
V20079-2	Leather Case	
31879-1	Shoulder Band	
31835-3	Battery Clip	

Requirement to Customers

For the purpose of prompt supply of service parts, inscribe the parts numbers by all means when you order.

Printed in Japan

—3909-0—