SANYO

Solid State Stereo Tuner Amp.

MODEL DC-90

SERVICE MANUAL

SANYO ELECTRIC CO., LTD.
INTERNATIONAL DIVISION: SANYO ELECTRIC TRADING CO., LTD.
OSAKA, JAPAN

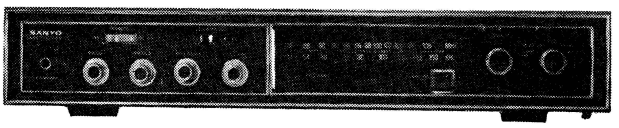

SPECIFICATIONS

General

FET ····· 2SK25×1
Transistors ····· 2SC668×3 2SC545×1 2SC537×7
2SC693×10 2SB186×1 2SD24 ×2
2SC931×2 2SB474×2
Diodes ····· 1S553×1 1S188×10 10D1 ×5
DS-410×3
Power source ····· AC 120V 60Hz
Power consumption ····· 20W (at 0-signal)
AC outlets ····· Unswitched 120W
Dimensions ····· 18⅛″(W)×12 11/16″(D)×3 5/16″(H)
460×320×85mm)
Weight ····· 12 lbs. (5.4kg.)

FM tuner section

Tuning range ····· 88–108 MHz
Intermediate frequency····· 10.7 MHz
Sensitivity ····· 5μV (IHF)
Antenna····· Input impedance 300 ohm, unbalanced
Total harmonic distortion··· 2%
Frequency response ····· 50–15,000 Hz ±3db

FM MPX section

Channel separation ····· 20db at 1,000 Hz
Total harmonic distortion··· 3%
Stereo frequency response··· 50–15,000 Hz ±3db

AM tuner section

Tuning range ····· 535-1,605 KHz
Intermediate frequency····· 455 KHz
Sensitivity ····· 600μV/m (IHF)
Antenna····· Ferrite loop stick
Harmonic distortion ····· 3%

Audio amplifier section

Output power ····· 30W total peak music power
20W IHF total music power (10%)
5W IHF continuous power per channel (0.8%)
Frequency response ····· 30—20,000 Hz ±3db
Power band width ····· 20–20,000 Hz (10%)
Total harmonic distortion··· 0.4% (at 1 watt)
Input sensitivity ····· MAG 3mV 50K ohm
X'TAL 100mV 500K ohm
PLAYBACK 100mV 100K ohm
Speaker impedance····· 4–16 ohm (Recommended 8 ohm)
Tone controls ····· BASS ±10db at 100 Hz
TREBLE ±10db at 10K Hz

DIAL CORD STRINGING

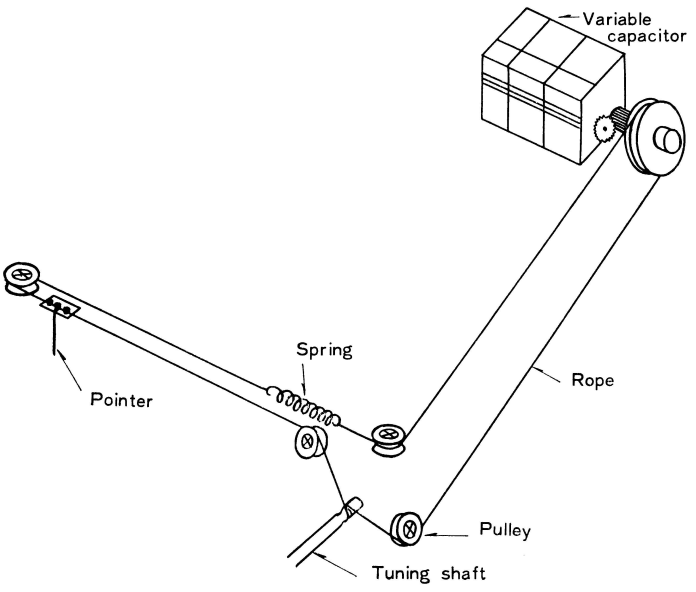

Ranks of Field Effect Transistor (TR1 2SK25)

Field Effect Transistor (TR1 2SK25) used in front end of FM circuitry is classified into either one of many ranks in respect to its characteristics. So the value of resistor (R102) should be adapted to the rank of 2SK25 as shown below;

Rank of TR1	Marking on TR1	Value of R102
D	K25D	100 ohms
E	K25E	390 ohms
F	K25F	1000 ohms

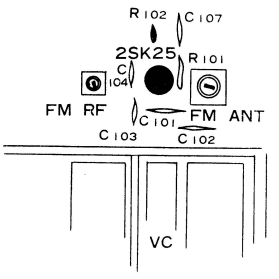

CIRCUIT DIAGRAM

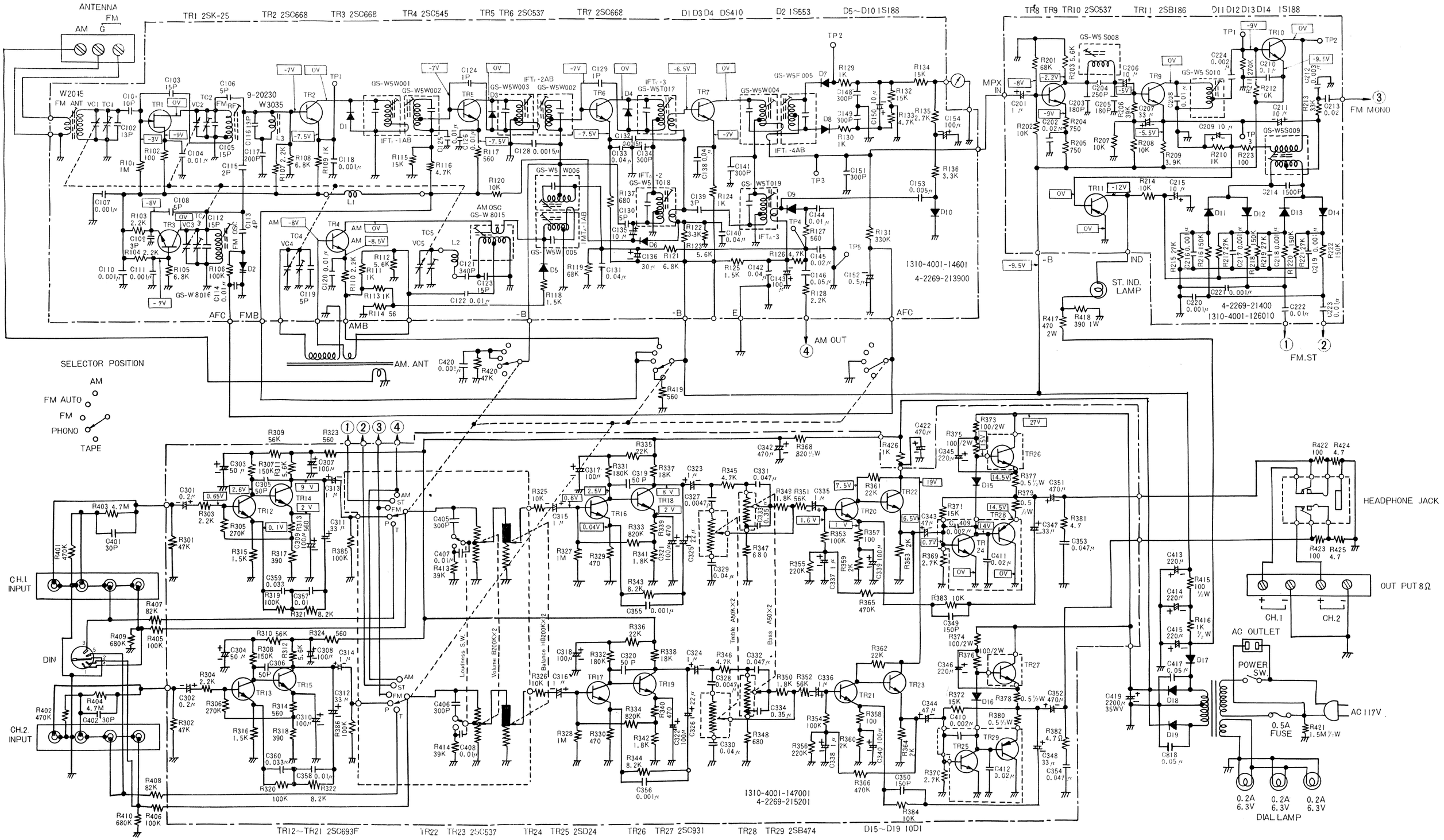

AF AMP CIRCUIT SECTION

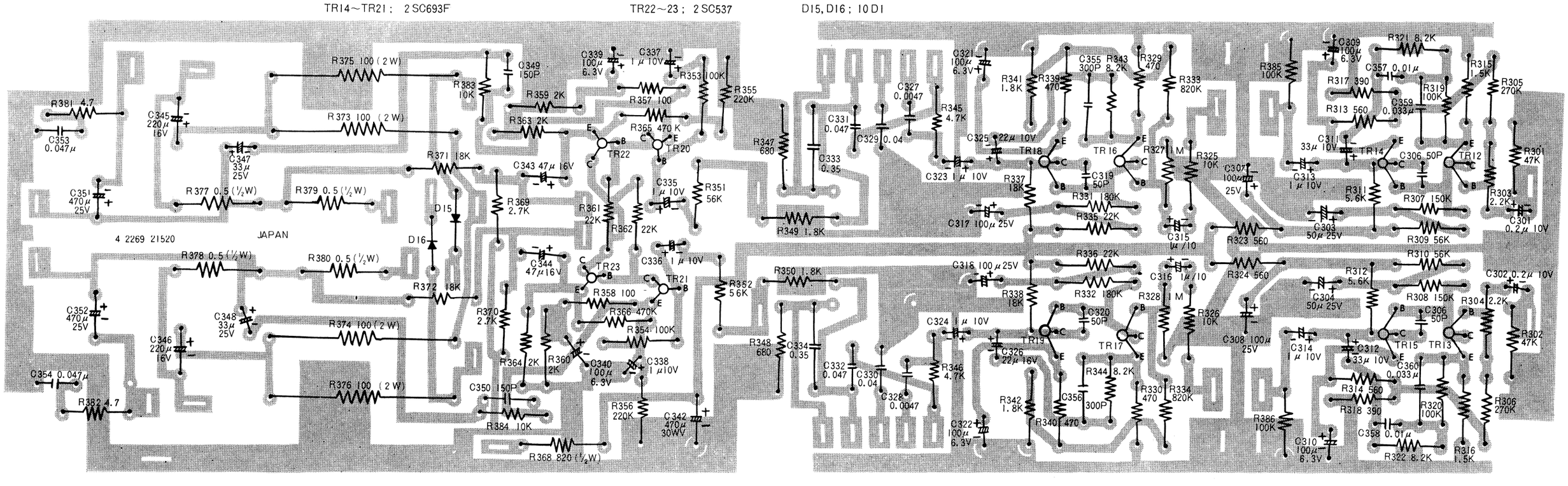

Ref. No.	Parts No.	Description	Q'ty
Electrical Parts			
*3	1310-4001-14700	PCB Assy-AF Circuit	1
	4-2269-21520	Printed Circuit Board	1
	4-2379-20530	Tab	40
	4-2369-20090	Receptacle	40
TR12, TR13, TR14, TR15, TR16, TR17, TR18, TR19, TR20, TR21		Transistor-2SC693	10
TR22, TR23		Transistor-2SC537	2
D15, D16		Diode-10D1	2
Resistors			
R301, R302		Carbon R Type, 47 Kohm, ±10%, ¼W	2
R303, R304		Carbon R Type, 2.2 Kohm, ±10%, ¼W	2
R305, R306		Carbon R Type, 270 Kohm, ±10%, ¼W	2
R307, R308		Carbon R Type, 150 Kohm, ±10%, ¼W	2
R355, R356		Carbon R Type, 220 Kohm, ±10%, ¼W	2
R309, R310, R351, R352		Carbon R Type, 56 Kohm, ±10%, ¼W	4
R311, R312		Carbon R Type, 5.6 Kohm, ±10%, ¼W	2
R323, R324, R313, R314		Carbon R Type, 560 ohm, ±10%, ¼W	4
R317, R318		Carbon R Type, 390 ohm, ±10%, ¼W	2
R319, R320, R385, R386, R353, R354		Carbon R Type, 100 Kohm, ±10%, ¼W	6
R321, R322, R343, R344		Carbon R Type, 8.2 Kohm, ±10%, ¼W,	4

Ref. No.	Description	Q'ty
Resistors		
R341, R342, R349, R350	Carbon R Type, 1.8 Kohm, ±10%, ¼W	4
R325, R326, R383, R384	Carbon R Type, 10 Kohm, ±10%, ¼W	4
R327, R328	Carbon R Type, 1 Megohm, ±10%, ¼W	2
R331, R332	Carbon R Type, 180 Kohm, ±10%, ¼W	2
R329, R330, R339, R340	Carbon R Type, 470 ohm, ±10%, ¼W	4
R335, R336, R361, R362	Carbon R Type, 22 Kohm, ±10%, ¼W	4
R333, R334	Carbon R Type, 820 Kohm, ±10%, ¼W	2
R337, R338, R371, R372	Carbon R Type, 15 Kohm, ±10%, ¼W	4
R345, R346	Carbon R Type, 4.7 Kohm, ±10%, ¼W	2
R347, R348	Carbon R Type, 680 ohm, ±10%, ¼W	2
R315, R316	Carbon R Type, 1.5 Kohm, ±10%, ¼W	2
R357, R358	Carbon R Type, 100 ohm, ±10%, ¼W	2
R359, R360, R363, R364	Carbon R Type, 2 Kohm, ±10%, ¼W	4
R365, R366	Carbon R Type, 470 Kohm, ±10%, ¼W	2
R369, R370	Carbon R Type, 2.7 Kohm, ±10%, ¼W	2
R381, R382	Carbon R Type, 4.7 ohm, ±10%, ¼W	2
R368	Carbon R Type, 820 ohm, ±10%, ½W	1
R373, R374, R375, R376	Metal Film Type, 100 ohm, ±10%, 2W	4
R377, R378, R379, R380	Wire Wound Type, 0.5 ohm, ±10%, ½W	4

Ref. No.	Description	Q'ty
Capacitors		
C313, C314, C315, C316, C323, C324, C335, C336	Aluminum Solid, 1μF, −20%−+40%, 10WV	8
C301, C302	Aluminum Solid, 0.2μF, −20%−+40%, 10WV	2
C359, C360	Mylar, 0.033μF, ±20%, 50WV	2
C357, C358	Mylar, 0.01μF, ±20%, 50WV	2
C327, C328	Mylar, 0.0047μF, ±20%, 50WV	2
C329, C330	Mylar, 0.04μF, ±20%, 50WV	2
C331, C332, C353, C354	Mylar, 0.047μF, ±20%, 50WV	4
C333, C334	Mylar, 0.35μF, ±20%, 50WV	2
C355, C356	Ceramic SL, 300μμF, ±10%, 10WV	2
C349, C350	Ceramic SL, 150μμF, ±10%, 50WV	2
C305, C306, C319, C320	Ceramic SL, 50μμF, ±10%, 50WV	4
C303, C304	Electrolytic, 50μF, −0%−+150%, 25WV	2
C307, C308, C317, C318	Electrolytic, 100μF, −0%−+150%, 25WV	4
C311, C312	Electrolytic, 33μF, −0%−+150%, 10WV	2
C309, C310, C321, C322, C339, C340	Electrolytic, 100μF, −0%−+150%, 6.3WV	6
C325, C326	Electrolytic, 22μF, −0%−+150%, 16WV	2
C343, C344	Electrolytic, 47μF, −0%−+150%, 16WV	2
C337, C338	Electrolytic, 1μF, −0%−+150%, 10WV	2
C342	Electrolytic, 470μF, −0%−+150%, 30WV	1
C351, C352	Electrolytic, 470μF, −0%−+150%, 25WV	2
C345, C346	Electrolytic, 220μF, −0%−+150%, 16WV	2
C348, C347	Electrolytic, 33μF, −0%−+150%, 25WV	2

Ref. No.	Parts No.	Description	Q'ty
Electrical Parts			
*1	1310-4001-14600	PCB Assy-RF, IF Circuit	1
	4-2269-21390	Printed Circuit Board	1
	4-2579-20470	Antenna Coil FM	1
	4-2599-20230	RF Coil	1
	4-2589-20460	OSC Coil FM	1
	4-2539-20070	IF Trap	1
	4-2539-20020	Heater Choke	1
	4-2539-20060	RF Filter Choke	1
	4-2249-20310	Trimer Capacitor-1~10μF	1
	4-2569-20430	IF Trans FM-FM IF 1st	1
	4-2569-20440	IF Trans FM-FM IF 1st, FM IF 2nd	2
	4-2569-20450	IF Trans FM-FM IF 2nd	1
	4-2569-20460	IF Trans FM-FM IF 3rd	1
	4-2569-20470	IF Trans FM-FM Det.	1
	4-2569-20480	IF Trans FM-FM Det.	1
	4-2589-20450	OSC Coil AM	1
	4-2249-20380	Variable Capacitor	1
	4-2569-20490	IF Trans AM-AM IF 1st	1
	4-2569-20500	IF Trans AM-AM IF 1st	1
	4-2569-20510	IF Trans AM-AM IF 2nd	1
	4-2569-20520	IF Trans AM-AM IF 3rd	1
	4-2379-20630	Tab	20
TR1		Transistor-2SK25 or MK-10	1
TR2, TR3, TR7		Transistor-2SC668	3
TR4		Transistor-2SC545	1
TR5, TR6		Transistor-2SC537	2
D5, D6, D7, D8, D9, D10		Diode-1S188	6
D1, D3, D4		Diode-DS410	3
D2		Diode-1S553	1
Resistors			
R114	Carbon ELR Type, 56 ohm, ±10%, ¼W		1
R102	Carbon ELR Type, 100 ohm, ±10%, ¼W		1
R135	Carbon ELR Type, 2.7 Kohm, ±10%, ¼W		1
R117, R127	Carbon ELR Type, 560 ohm, ±10%, ¼W		2
R137	Carbon ELR Type, 680 ohm, ±10%, ¼W		1
R111, R113	Carbon R Type, 1 Kohm, ±10%, ¼W		2
R109, R124, R129, R130	Carbon ELR Type, 1 Kohm, ±10%, ¼W		4
R118	Carbon R Type, 1.5 Kohm, ±10%, ¼W		1
R125	Carbon ELR Type, 1.5 Kohm, ±10%, ¼W		1
R103, R104, R107, R110, R128	Carbon ELR Type, 2.2 Kohm, ±10%, ¼W		5

Pef. No.	Description	Q'ty
Resistors		
R122, R136	Carbon ELR Type, 3.3 Kohm, ±10%, ¼W	2
R116, R126, R133	Carbon ELR Type, 4.7 Kohm, ±10%, ¼W	3
R112, R123	Carbon ELR Type, 5.6 Kohm, ±10%, ¼W	2
R105, R108, R121	Carbon ELR Type, 6.8 Kohm, ±10%, ¼W	3
R115, R132, R134	Carbon ELR Type, 15 Kohm, ±10%, ¼W	3
R120	Carbon R Type, 10 Kohm, ±10%, ¼W	1
R119	Carbon ELR Type, 68 Kohm, ±10%, ¼W	1
R106	Carbon ELR Tvpe, 100 Kohm, ±10%, ¼W	1
R101	Carbon ELR Type, 1 Megohm, ±10%, ¼W	1
R131	Carbon ELR Type, 330 Kohm, ±10%, ¼W	1
Capacitors		
C124, C129	Ceramic SL, 1μμF, ±0.25μμF, 50WV	2
C115	Ceramic SL, 2μμF, ±0.25μμF, 50WV	1
C109, C139	Ceramic SL, 3μμF, ±0.25μμF, 50WV	2
C113	Ceramic SL, 4μμF, ±0.25μμF, 50WV	1
C106, C108, C119, C130	Ceramic SL, 5μμF, ±0.25μμF, 50WV	4
C101	Ceramic SL, 10μμF, ±5%, 50WV	1
C102, C116	Ceramic SL, 13μμF, ±5%, 50WV	2
C112	Ceramic N1400, 15μμF, ±5%, 50WV	1
C123, C103, C105	Ceramic SL, 15μμF, ±5%, 50WV	3
C117	Ceramic SL, 200μμF, ±10%, 50WV	1
C134, C141, C151, C148, C149	Ceramic SL, 300μμF, ±10%, 50WV	5
C107, C110, C111, C118	Ceramic SL, 0.001μF, ±10%, 25WV	4
C128, C132	Ceramic YY, 0.0015μF, ±10%, 25WV	2
C153	Ceramic YZ, 0.005μF, ±10%, 25WV	1
C104, C114, C125, C126, C120, C122	Ceramic SL, 0.01μF, ±20%, 50WV	6
C131, C133, C142, C138, C140	Ceramic SL, 0.04μF, ±20%, 50WV	5
C121	Plastic Film, 340μμF, ±5%, 35WV	1
C144	Mylar, 0.01μF, ±20%, 50WV	1
C145	Mylar, 0.02μF, ±20%, 50WV	1
C146	Mylar, 0.05μF, ±20%, 50WV	1
C152	Aluminum Solid, 0.5μF, ±20%, 10WV	
C135, C150	Electrolytic, 10μF, −0% −+ 150%, 10WV	2
C136	Electrolytic, 30μF, −0% −+ 150%, 10WV	1
C143, C154	Electrolytic, 100μF, −0% −+ 150%, 6WV	2

POWER CIRCUIT SECTION

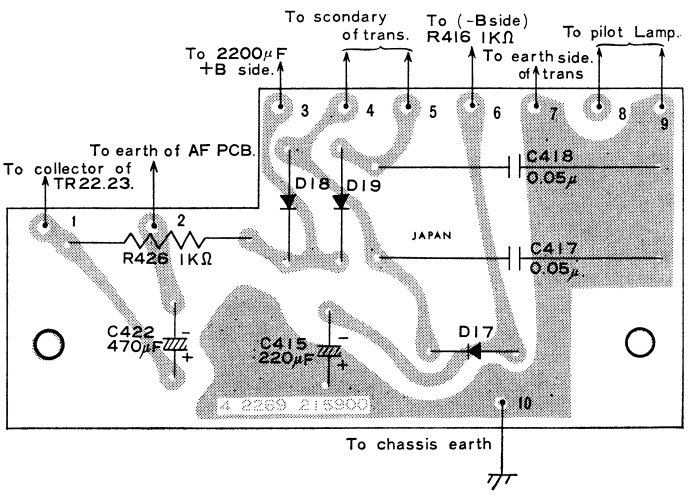

Ref. No.	Parts No.	Description	Q'ty
Electrical Parts			
*4	1310-4001-15600	PCB Assy-Power Circuit	1
	4-2269-21590	Printed Circuit Board	1
D17, D18, D19		Diode-10D1	3
Resistor & Capacitors			
R426	Resistor-Carbon R Type, 1 Kohm, ±10%, ½W		1
C422	Capacitor-Electrolytic, 470μF, −0% −+150%, 30WV		1
C415	Capacitor-Electrolytic, 220μF, −0% −+150%, 30WV		1
C417, C418	Capacitor-Oil Tuber, 0.05μF, ±20%, 400WV		2

EXPLODED VIEW

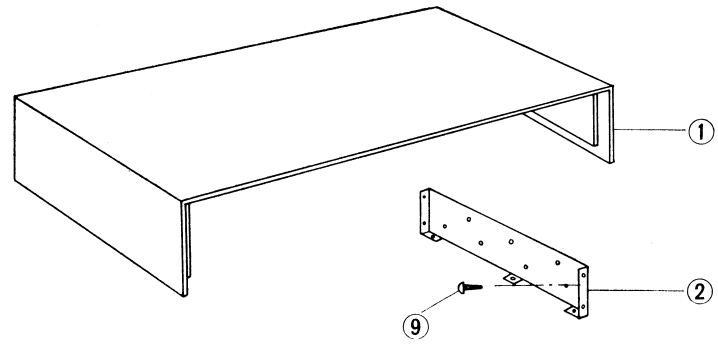

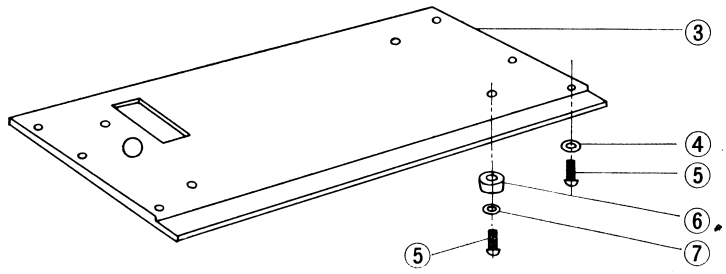

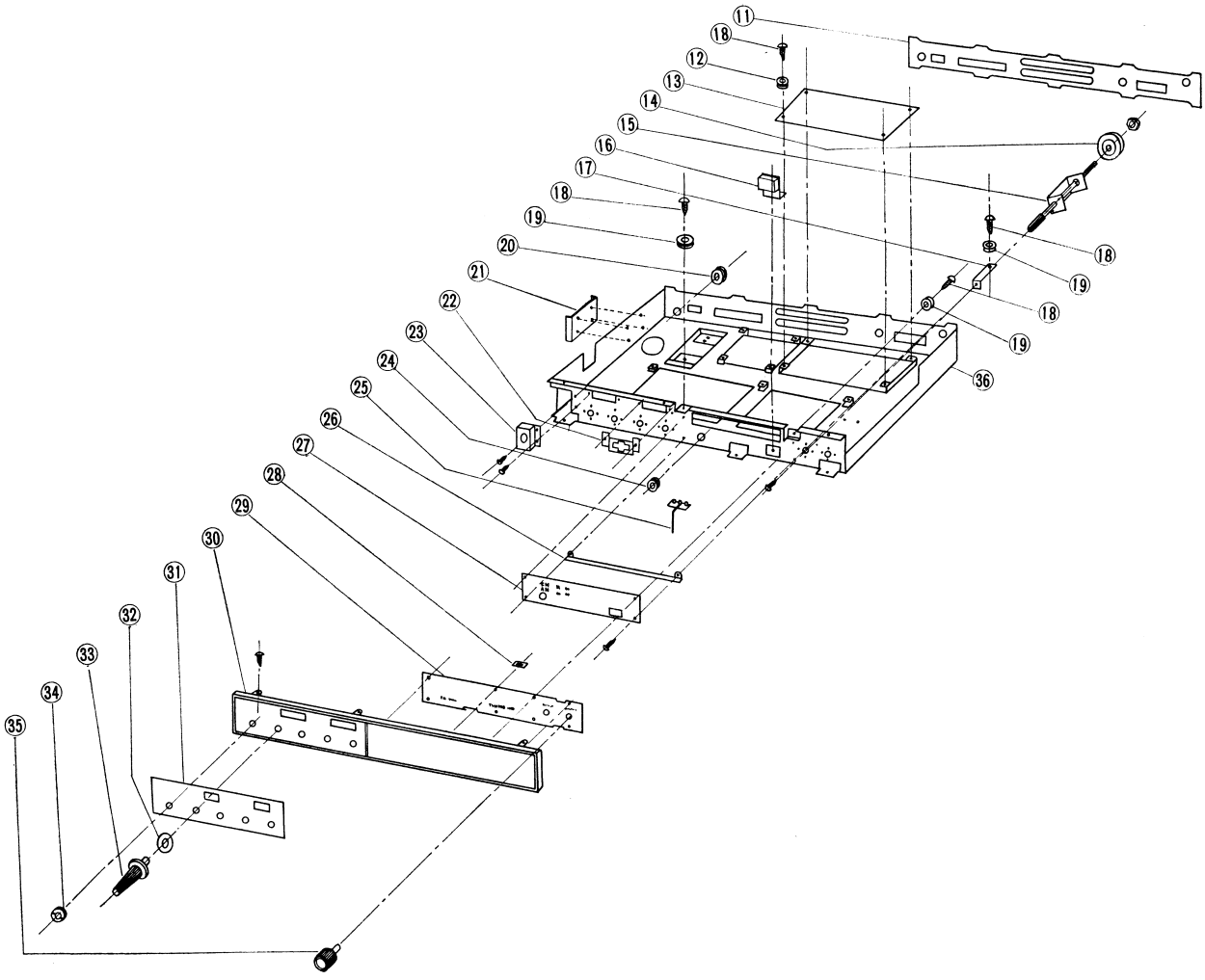

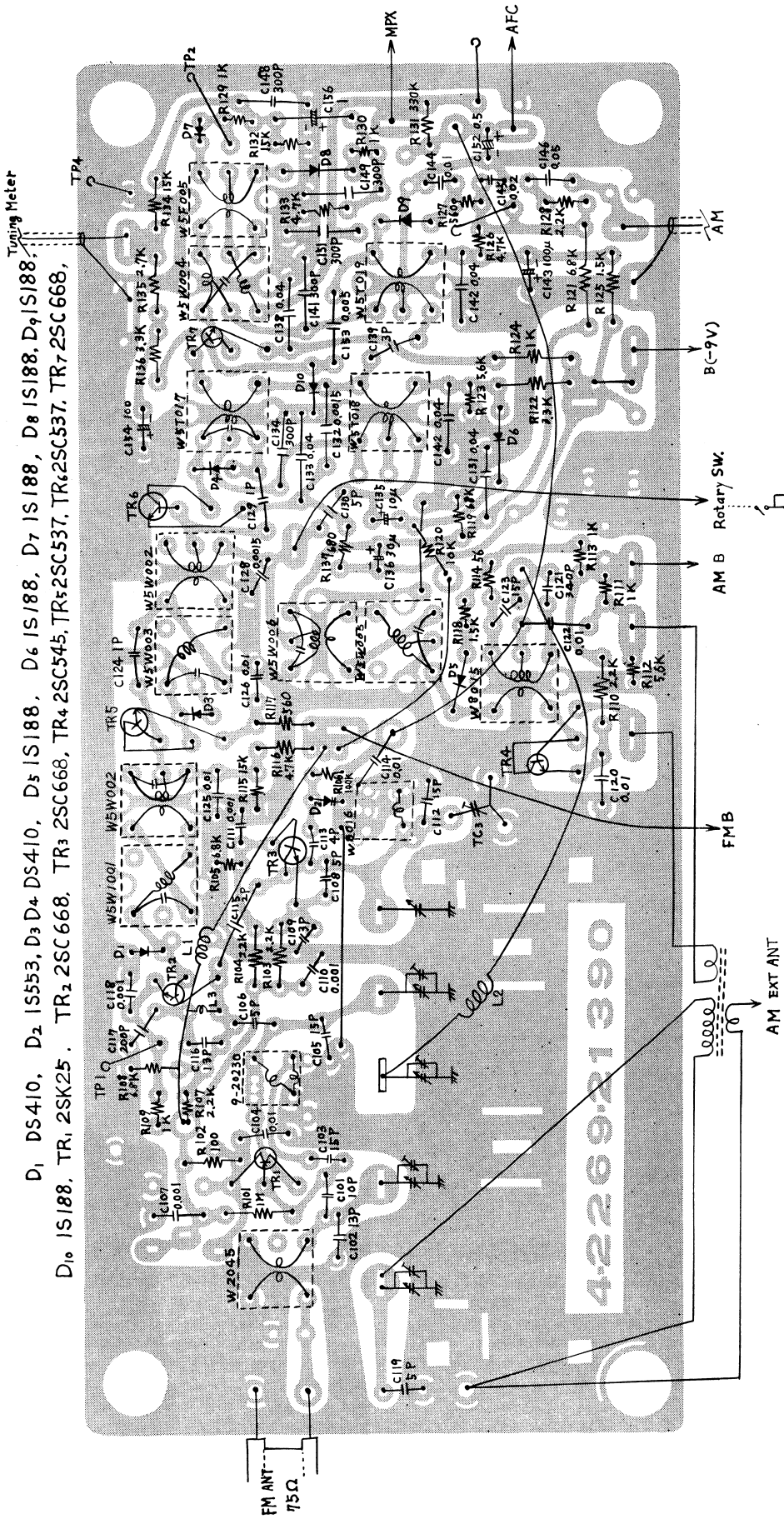
D1 DS410, D2 1S53, D3 D4 DS410, D5 1S188. D6 1S188, D7 1S188, D8 1S188, D9 1S188,
D10 1S188. TR1 2SK25. TR2 2SC668. TR3 2SC668. TR4 2SC545, TR5 2SC537, TR6 2SC537. TR7 2SC668,
Tuning Meter
MPX
AFC
AM
B(-9V)
Rotary SW.
AM B
FMB
AM EXT ANT
FM ANT 75Ω

Ref. No.	Parts No.	Description	Q'ty
Cabinet			
	-	Cabinet Assy	1
1	-1312-1101-16400	Cabinet	1
2	-1312-3101-11000	Metal Mount	2
9	-NAMO-2.7 x 8	Screw-2.7×8	12
3	-1312-1105-11100	Plate Bottom	1
4	-KOWA-4.5x16x1	Washer-4.5×16×1	4
5	-NABE-4×16	Screw 4×16	4
6	-1312-1804-10300	Leg Rubber	4
7	-KOWA-4.5x12x1	Washer-4.5×12×1	4
5	-NABE-4×16	Screw-4×16	4
35	1312-1601-16100	Knob-TUNING, SELECTOR	2
32	1312-1611-12000	Sheet Knob-BASS, TREBLE, BALANCE, VOLUME	4
33	1312-1601-16200	Knob-BASS, TREBLE, BALANCE, VOLUME	4
Chassis			
36	—1312-3301-15600	Chassis	1
11	—1312-7102-10700	Name plate Rear	1
17	-1312-4106-12501	Metal Mount Pulley	1
19	-1312-4107-10000	Pulley	1
18	-1312-4108-10000	Spindle Pulley	1
19	-NABE-3×6	Screw-3×6	1
18	-1312-4107-10000	Pulley	3
	-1312-4108-10000	Spindle Pulley	3
22	-1312-3604-12500	Metal Mount Switch-POWER, LOUDNESS	2
	-NATA-3×6	Screw-3×6	4
23	-1312-3601-11700	Metal Mount Socket-HEADPHONE	1
	-NATA-3×6	Screw-3×6	2
16	-1312-3406-10400	Metal Mount Indicator-TUNING INDICATOR	1
	-1312-2903-10300	Rubber Pad	1
	-NATA-3×6	Screw-3×6	1
21	—1312-6201-14000	Plate Heat Sink-Power TR	1
	-1312-3103-00101	Metal Fix Rear cover-Power PCB Assy	2
	-NABE-3x6	Screw-3×6	2
	-1312-3603-12000	Metal Mount Antenna	1
	-NATA-3x6	Screw-3×6	2
12	-1312-6111-10000	Bushing-RF, IF PCB Assy	4
18	-1312-4108-10000	Spindle Pulley	4
24	—1312-5201-10200	Bushing-FM Stereo Indicator	1
	—1312-3607-10000	Bushing-Antenna Lead	1
20	—1312-6111-10000	Bushing-AC Cord	1
27	-1312-1201-16800	Plate Dial	1
26	-1312-6110-11800	Shelter Light	1
	-NATA-3×8	Screw-3×8	4
30	-1312-1203 17700	Panel Control	1
29	-1312-1201-16700	Panel Dial	1
28	-SPEED NUT-2	Nut-2	8
31	-1312-1203-17800	Panel Control	1
	-NATA-3×6	Screw-3×6	5
25	—1310-3011-11000	Pointer Assy	1
15	1310-3003-11600	Shaft Dial Assy	1
	-	Shaft Dial	1
	-	Plate Reinf Metal	1
	-	Ring E	2
	-NATA-3×6	Screw-3×6	3
14	—1312-4116-10200	Flywheel	1
	—1312-4112-10001	Rope	1
	—1312-4111-00100	Spring Rope	1
	-1310-3002-10600	Drum Assy	1
	-	Boss Insert	1
	-	Drum	1
	-NABE-3×10	Screw-3×10	1
34	—1312-4202-11000	Nut	1

Ref. No.	Parts No.	Description	Q'ty
Electrical Parts (Chassis Section)			
	1310-4001-14600	P.C.B. Assy-RF, IF Circuit *1	1
	1310-4001-12601	P.C.B. Assy-MPX Circuit *2	1
	1310-4001-14700	P.C.B. Assy-AF Circuit *3	1
	4-2239-20332	Electrolytic Capacitor-2200 μF /35WV	1
	4-2519-21100	Power Trans	1
	4-2579-20770	Antenna Coil MW-Ferrite Loop Stick	1
	4-2319-21160	Switch Wave Cuide-POWER SWITCH	1
	4-2319-21120	Switch Wave Guide-LOUDNESS	1
	4-2359-20530	Headphone Jack	1
	4-2359-20190	Socket DIN	1
	4-2359-20330	Socket Phono 4P-Playback, Recorder & Phono Terminal	2
	4-2359-20940	Socket AC-AC OUTLET	1
	4-6129-20150	Pilot Lamp-FM Stereo Indicator, 6V, 25mA UL Type	1
	4-2379-20080	Terminal Lug 4P-Speaker Outpnt Terminal	1
	4-2379-20020	Terminal Lug 3P-Antenna Terminal, AM & FM	1
	4-2359-20870	Pilot Lamp Socket-Dial, UL Type	3
	4-2349-20180	Fuse, 0.5A, UL Type	1
	4-6129-20010	Pilot Lamp, 6.3V, 0.2A	3
	4-2439-20190	Power Cord, UL Type	1
	4-2379-20210	Terminal Lug 1-6P	2
	4-2379-20390	Terminal Lug 1-2P	2
	4-2229-21600	V.R.-BASS, TREBLE, 50 Kohm -A Type×2	2
	4-2229-21590	V.R. VOLUME, 200K ohm-B Type×2	1
	4-2229-21580	V.R.-BALANCE,200K ohm-HB Type×2	1
	4-2319-21460	Switch Rotary-SELECTOR	1
	4-5119-20070	Meter-TUNING METER	1
	4-2379-20410	Terminal Lug 1-4P	1
	4-2379-20270	Terminal Lug 1-2P	1
	1310-4001-15600	P.C.B Assy-Power Circuit *4	1
TR26, TR27		Transistor-2SC931	2
TR28, TR29		Transistor-2SB474	2
TR24, TR25		Transistor-2SD24	2

Resistors		
R417	Metal Film Type, 470 ohm, ±10%, 1W	1
R418	Metal Film Type, 390 ohm, ±10%, 1W	1
R416	Carbon R Type, 1 Kohm, ±10%, ½W	1
R415	Carbon R Type, 100 ohm, ±10%, ½W	1
R421	Solid, 1.5 Megohm, ±20%, ½W	1
R424, R425	Carbon R Type, 4.7 ohm, ±10%, ¼W	2
R422, R423	Metal Film, 100 ohm, ±10%, ½W	2
R401, R402	Carbon R Type, 470 Kohm, ±10%, ¼W	2
R403, R404	Carbon R Type, 4.7 Megohm, ±10%, ¼W	2
R407, R408	Carbon R Type, 82 Kohm, ±10%, ¼W	2
R409, R410	Carbon R Type, 680 Kohm, ±10%, ¼W	2
R405, R406	Carbon R Type, 100 Kohm, ±10%, ¼W	2
R420	Carbon R Type, 47 Kohm, ±10%, ¼W	1
R419	Carbon R Type, 560 ohm, ±10%, ¼W	1
R413, R414	Carbon R Type, 39 Kohm, ±10%, ¼W	2
Capacitors		
C414	Electrolytic, 330μF, −0% −+150%, 16WV	1
C413	Electrolytic, 220μF, −0% −+150%, 16WV	1
C409, C410	Mylar, 0.002μF, ±20%, 50WV	2
C411, C412	Mylar, 0.02μF, ±20%, 50WV	2
C420	Mylar, 0.001μF, ±20%, 50WV	1
C407, C408	Mylar, 0.01μF, ±20%, 50WV	2
C405, C406	Ceramic SL, 300μμF, ±20%, 50WV	2
C401, C402	Ceramic SL, 30μμF, ±20%, 50WV	2

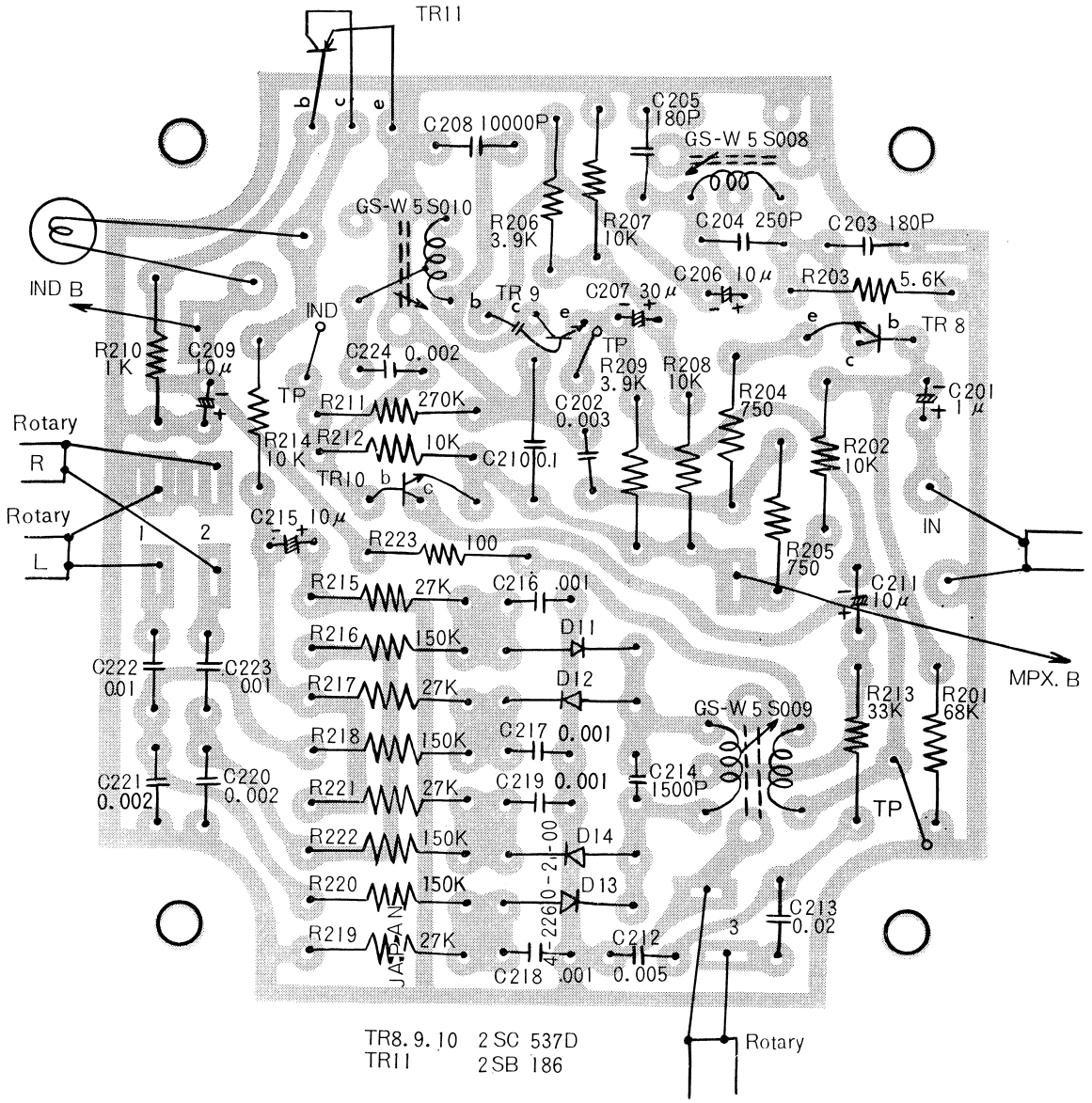

Ref. No.	Parts No.	Description	Q'ty
Electrical Parts			
*2	1310-4001-12601	PCB Assy-MPX Circuit	1
	4-2269-21400	Printed Circuit Board	1
	4-2659-20110	Multiplex Coil 38KHz	1
	4-2659-20120	Multiplex Coil 19KHz	1
	4-2659-20100	Multiplex Coil SCA	1
	4-2379-20630	Tab	9
	4-2369-20090	Receptacle	9
TR8, TR9, TR10		Transistor-2SC537	3
TR11		Transistor-2SB186	1
D11, D12, D31, D14		Diode-1S188	4
Resistors			
R223		Carbon R Type, 100 ohm, ±10%, ¼W	1
R204, R205		Carbon R Type, 750 ohm, ±10%, ¼W	2
R210		Carbon R Type, 1 Kohm, ±10%, ¼W	1
R206, R209		Carbon R Type, 3.9 Kohm, ±10%, ¼W	2
R203		Carbon R Type, 5.6 Kohm, ±10%, ¼W	1
R202, R207, R208, R212, R214		Carbon R Type, 10 Kohm, ±10%, ¼W	5
R213		Carbon R Type, 33 Kohm, ±10%, ¼W	1
R215, R217, R219, R221		Carbon R Type, 27 Kohm, ±10%, ¼W	4

Ref. No.	Description	Q'ty
Resistors		
R201	Carbon R Type, 68 Kohm, ±10%, ¼W	1
R216, R218, R220, R222	Carbon R Type, 150 Kohm, ±10%, ¼W	4
R211	Carbon R Type, 270 Kohm, ±10%, ¼W	1
Capacitors		
C207	Electrolytic, 30μF, −10%−+150%, 6WV	1
C211, C206, C209, C215	Electrolytic, 10μF, −10%−+150%, 10WV	4
C201	Aluminum Solid, 1μF, −20% −+40%, 10WV	1
C214	Plastic Film, 1500μμF, ±10%, 50WV	1
C208	Plastic Film, 10000μμF, ±10%, 35WV	1
C204	Ceramic, 250μμF, ±10%, 50WV	1
C205, C203	Ceramic, 180μμF, ±10%, 50WV	2
C216, C217, C218, C219, C221, C220	Mylar, 0.001μF, ±20%, 50WV	6
C212	Mylar, 0.003μF, ±20%, 50WV	1
C222, C223	Mylar, 0.01μF, ±20%, 50WV	2
C210	Mylar, 0.1μF, ±20%, 50WV	1
C224	Mylar, 0.002μF, ±20%, 50WV	1
C202, C213	Mylar, 0.02μF, ±20%, 50WV	2

ADJUSTMENT

AM ADJUSTMENT

Step	Adjusting circuit	Connections		SG. frequency	Position of tuning dial	Adjustment	V.T.V.M. Oscilloscope
		Input	Output				
1	IF	Connect sweep generator. to VC4.	Connect oscilloscope to test point TR4.	455 KHz (400 Hz, 30% modulation)	Near max. capacity of VC. at position with no unrequred signal.	IFTA-1AB IFTA-2 IFTA-3	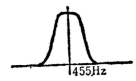
2	RF	Connect standard loop antenna to output terminals of SG. Place receiver 60 cm from loop antenna.	Connect V.T.V.M. to speaker terminals or test point TP4.	600 KHz (400 Hz 30% modulation)	600 KHz.	AM ANT AM OSC (GS-W8015)	Max.
3				1400 KHz (400 Hz 30% modulation)	1400 KHz	TC 4 TC 5	Max.
4	Repeatr adjustments.						

PREPARE
1. Variable capacitor completely closed.
2. Set the dial pointer to very left line dial scale.
3. Connect sweep generator. SG, V.T.V.M. and oscilloscope.
4. Selector switch to "AM"
5. VOLUME & TONE is max.
6. Use a screwdriver with plastic grip for all adjustments.

FM ADJUSTMENT

Step	Adjusting circuit	Connections		SG frequency	Position of tuning dial	Adjustment	V.T.V.M. Oscilloscope
		Input	Output				
1	IF	Connect sweep generator to tost point TP1 through 0.01μF.	Connect oscilloscope to test point TP_2.	10.7 MHz (non modulation)	Near max. capacity of VC. at position with no unrequred signal.	IFTF-1AB IFTF-2AB IFTF-3 IFTF-4AB (primary)	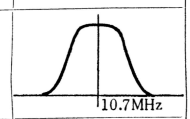
2	Ratio Det.		Connect oscilloscope to test point TP_3.			IFTF-4 AB (secondary)	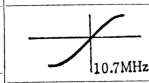
3	RF	Connect FM SG. to FM ANT. terminals.	Connect V.T.V.M. to test point TP_2.	90 MHz (400 Hz 30% modulation)	90 MHz	FM ANT FM RF FM OSC	Max.
4				106 MHz (400 Hz 30% modulation)	106 MHz	TC 1 TC 2 TC 3	Max.
5	Repeat adjustments.						

PREPARE
1. Variable capacitor completely closed.
2. Set the dial pointer to very left line of dial scale.
3. Connect sweep generator, FM SG, V.T.V.M. and oscilloscope. FM antena input impedance is 300 ohm.
4. Selector switch to "FM"
5. Use a screwdriver with plastic grip for all adjustments.

FM MPX ADJUSTMENT

Step	Adjusting circuit	Connections		Position of tuning dial	Adjustment	V.T.V.M.
		Input	Output			
1	SCA signal filter	Add SCA signal to FM stereo SG. to FM ANT. terminals. FM stereo signal OFF.	Connect V.T.V.M. to C204, C205 & C206 (+) terminals.	Near max. capacity of VC. at position with no unrequred signal.	GS-W5S008	Min.
2	19 KHz pilot signal	Connect FM stereo SG. to FM ANT terminals. 19 KHz signal ON. SCA signal OFF.	Connect V.T.V.M. to tast point TP1 (On the MPX PCB).		GS-W5S010	Max.
3	FM stereo signal separation	Connect FM stereo SG to FM ANT terminals. 19 KHz signal ON. Main channel, sub channel signal ON. Add 1000Hz signal from L CH.	Connect V.T.V.M. to MPX PCB output(Right side +) or Right speaker terminal.		GS-W5S009 GS-W5S010	Min.
4		Connect FM stereo SG to FM ANT terminals. 19KHz signal ON. Main channel, sub channel signal ON. Add 1000 Hz signal from R CH.	Connet V.T.V.M. to MPX PCB. output (Left side +) or Left speaker terminal.		GS-W5S009 GS-W5S010	Min.
5	Repeat steps 3,4. Set position with max. channel separation.					

PREPARE
1. Variable capacitor completely closed.
2. Connect FM stereo SG. V.T.V.M.
3. Selectors switch to "FM AUTO"
4. Use a screwdriver with plastic grip for all adjustments.
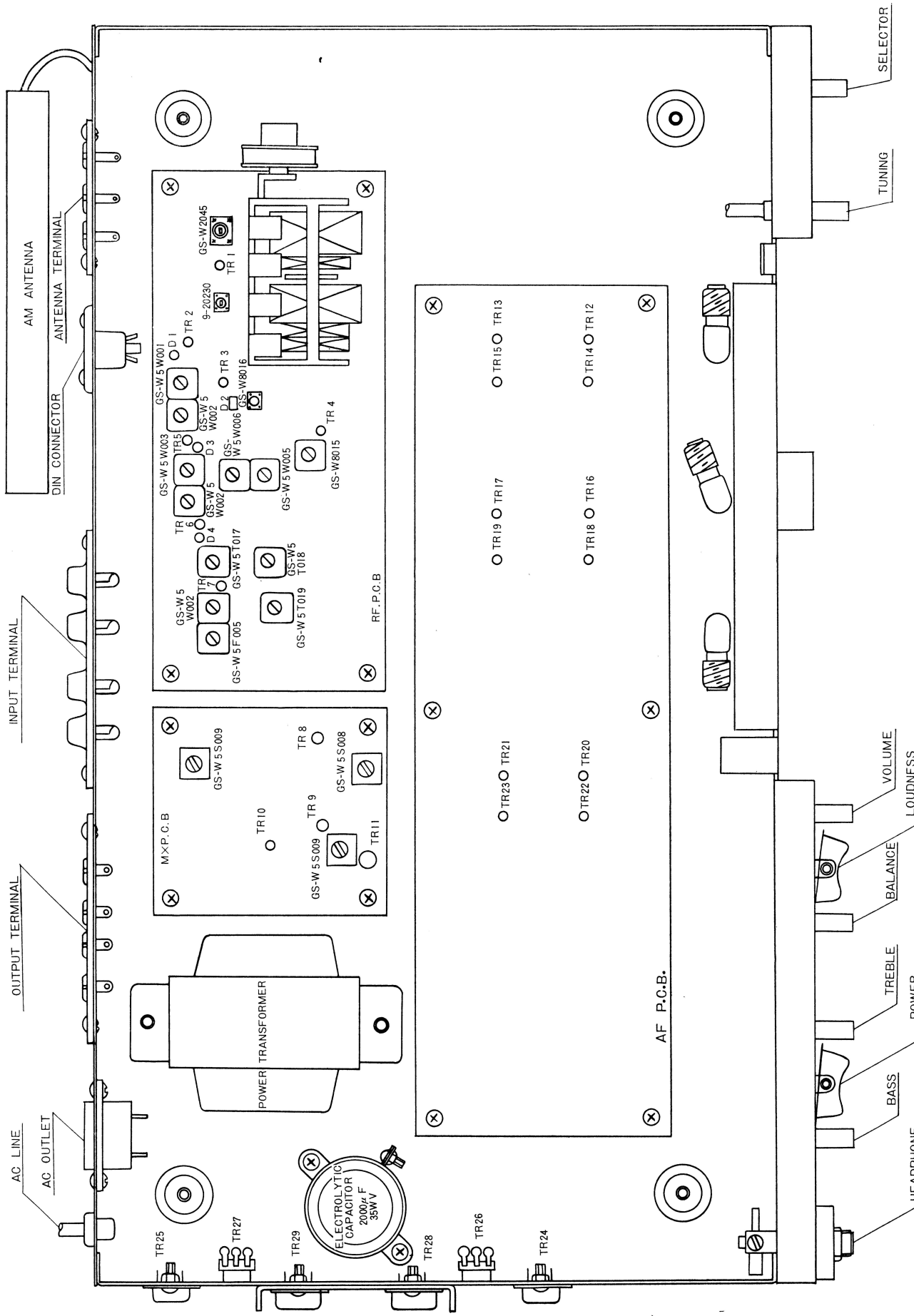
MAIN PARTS LOCATION