Supplement

CY-VMX6800U SYSTEM BLOCK

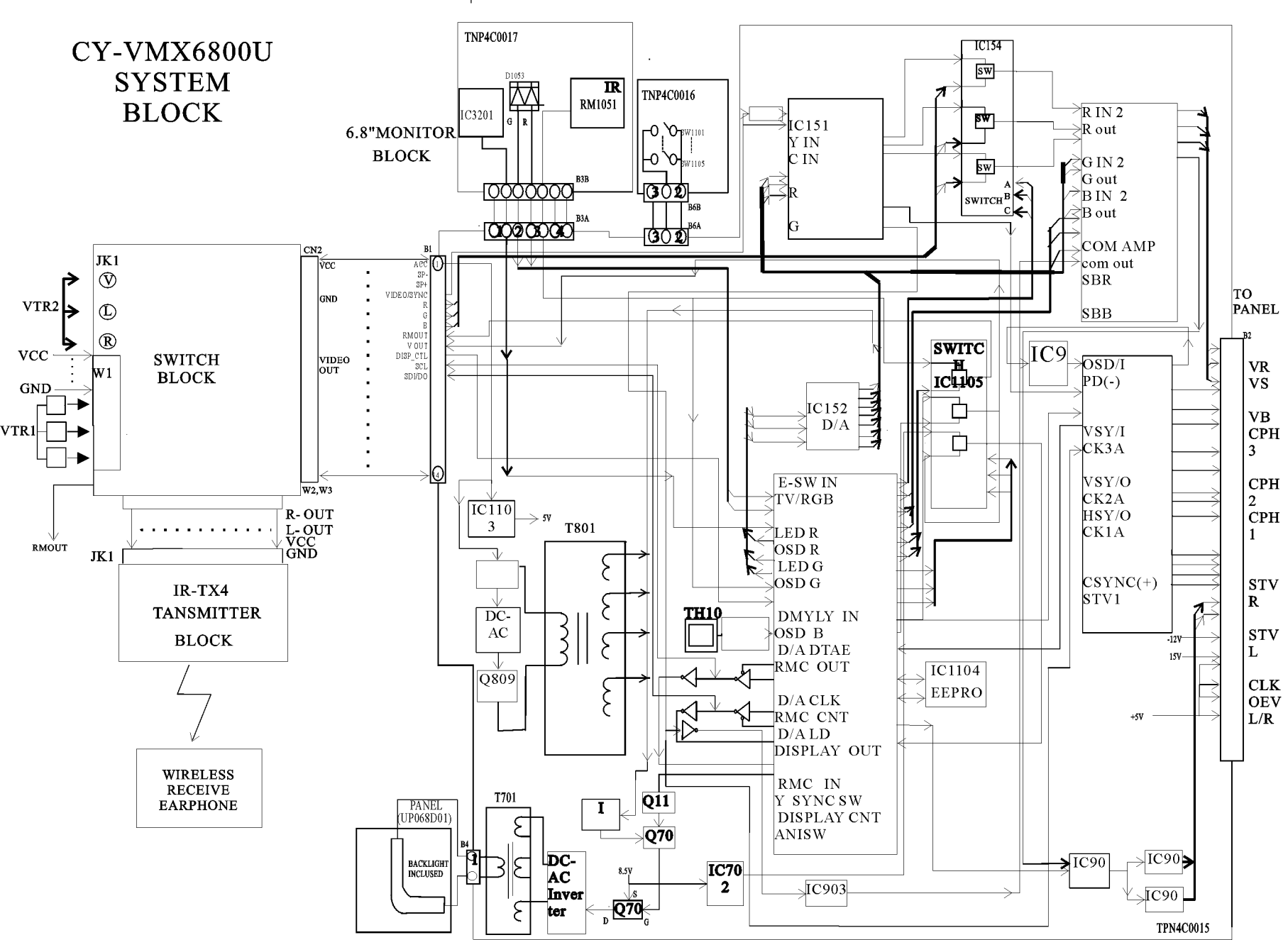

CY-VMX6800U SYSTEM BLOCK

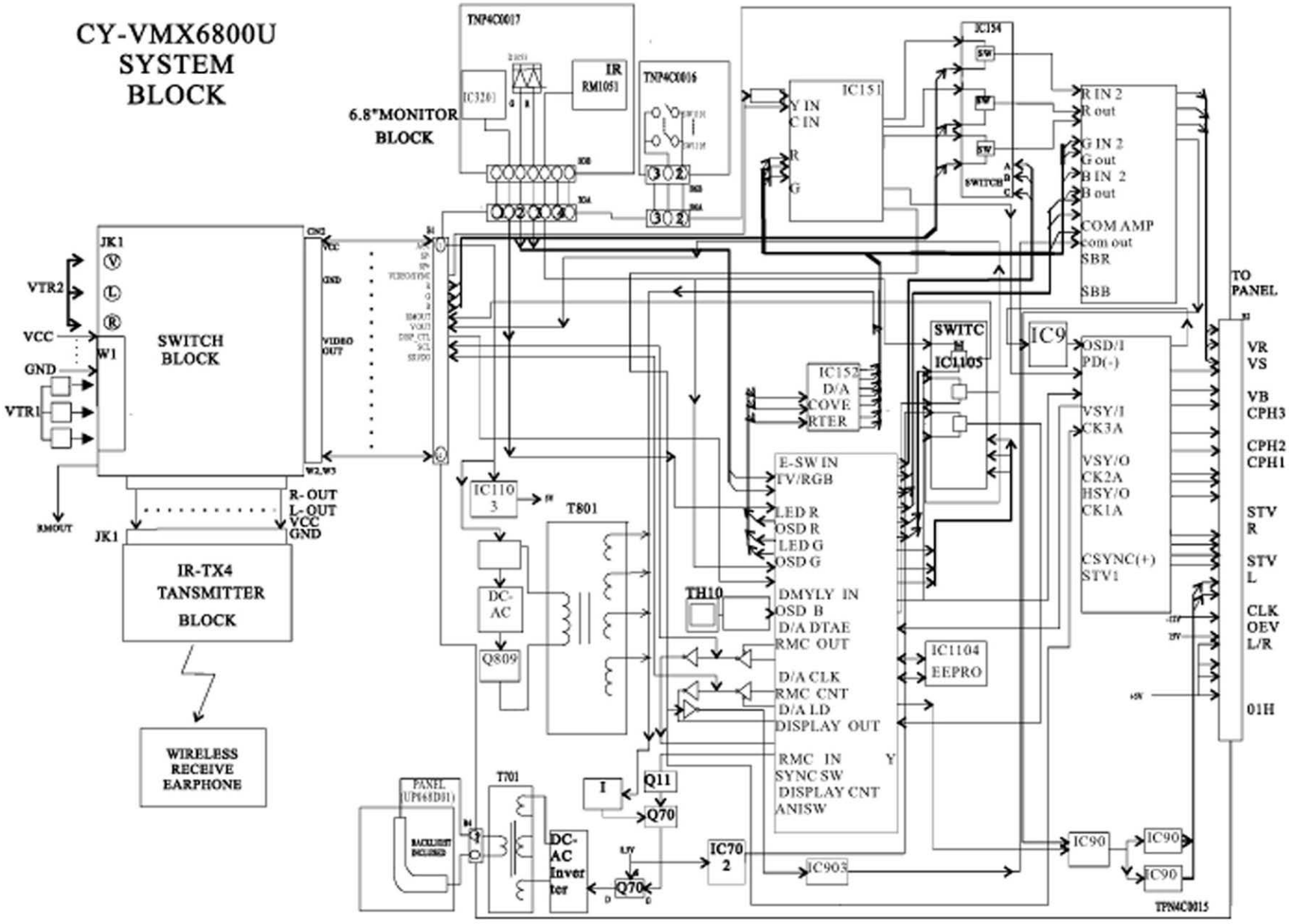

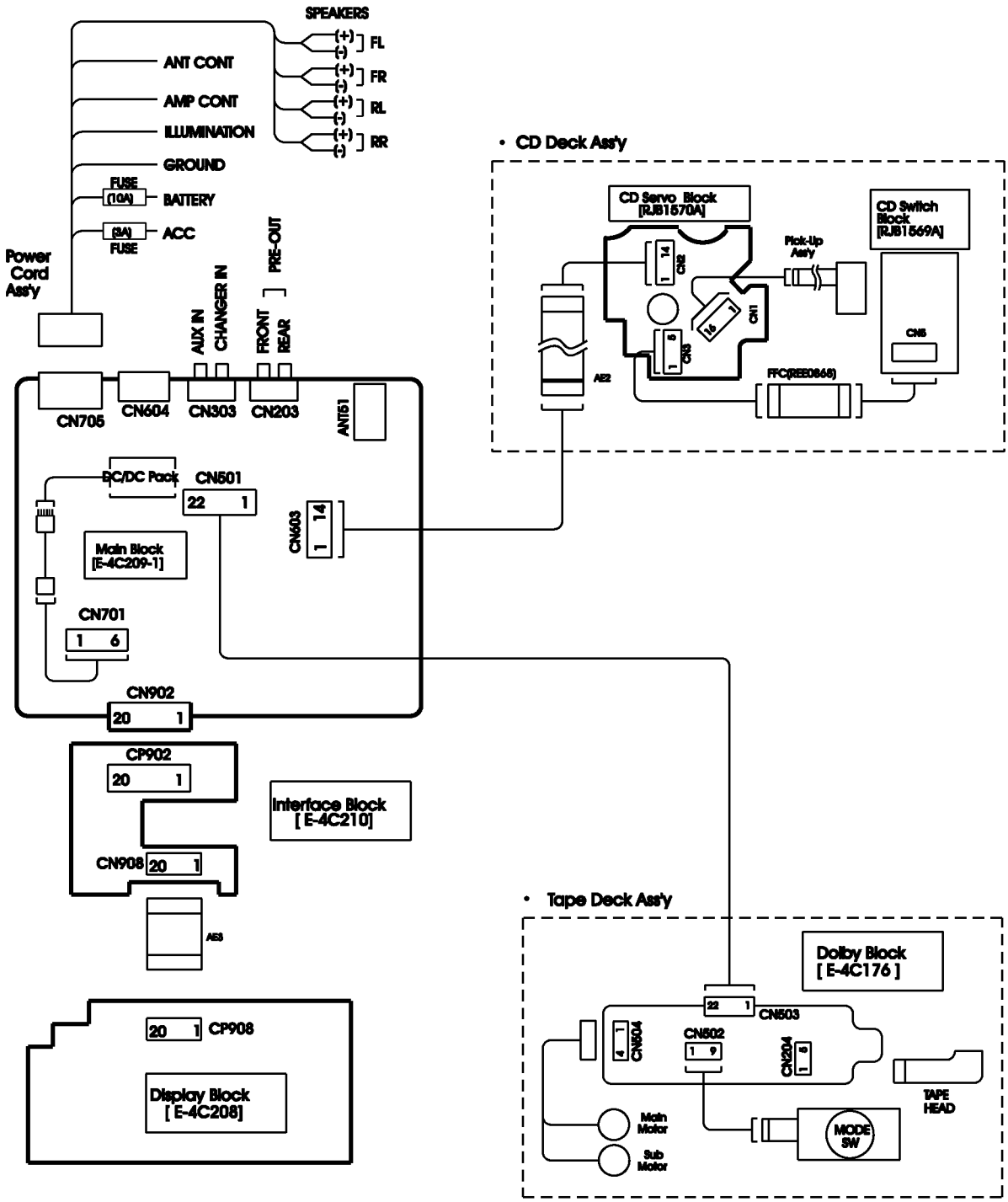
SPEAKERS
(+)
(-)
FL
FR
RL
RR
ANT CONT
AMP CONT
ILLUMINATION
GROUND
FUSE
(10A)
BATTERY
(3A)
FUSE
ACC
Power Cord Ass'y
AUX IN
CHANGER IN
PRE-OUT
FRONT
REAR
CN705
CN604
CN303
CN203
ANT51
DC/DC Pack
CN501
22
1
CN603
14
1
Main Block [E-4C209-1]
CN701
1
6
CN902
20
1
CP902
20
1
Interface Block [E-4C210]
CN908
20
1
AE3
20
1
CP908
Display Block [E-4C208]
• CD Deck Ass'y
CD Servo Block [RJB1570A]
CN2
14
1
CN1
16
1
CN3
9
1
Pick-Up Ass'y
CD Switch Block [RJB1569A]
CN5
AE2
FFC(REE0868)
• Tape Deck Ass'y
Dolby Block [E-4C176]
22
1
CN503
CN504
4
1
CN502
1
9
CN204
10
1
TAPE HEAD
Main Motor
Sub Motor
MODE SW

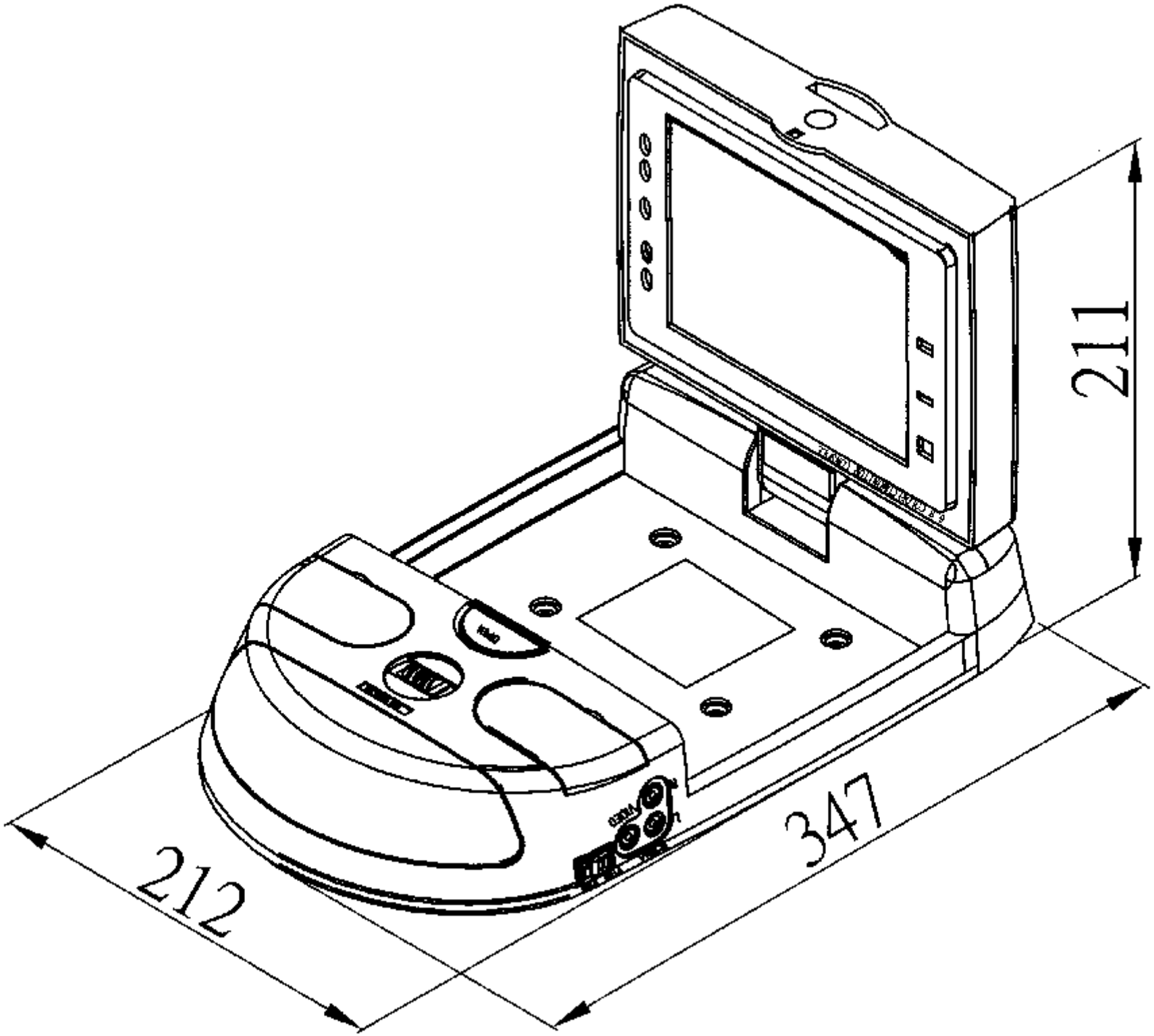
211
347
212

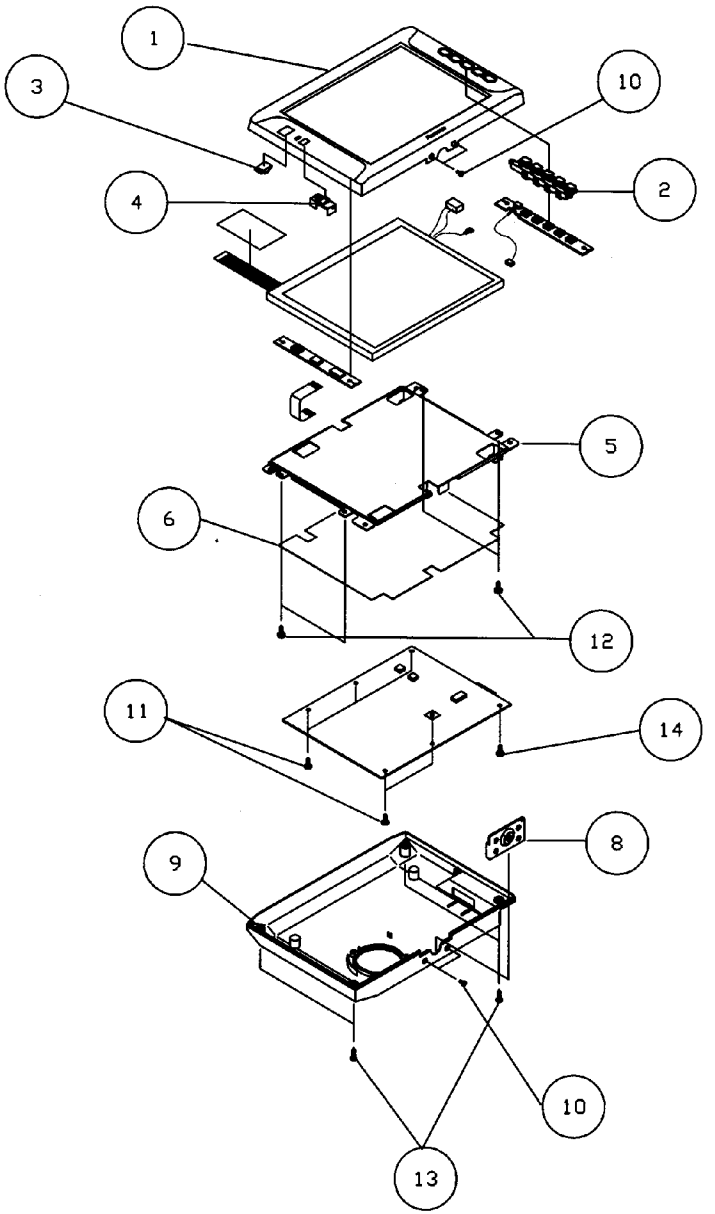
1
3
10
2
4
5
6
12
11
14
8
9
10
13

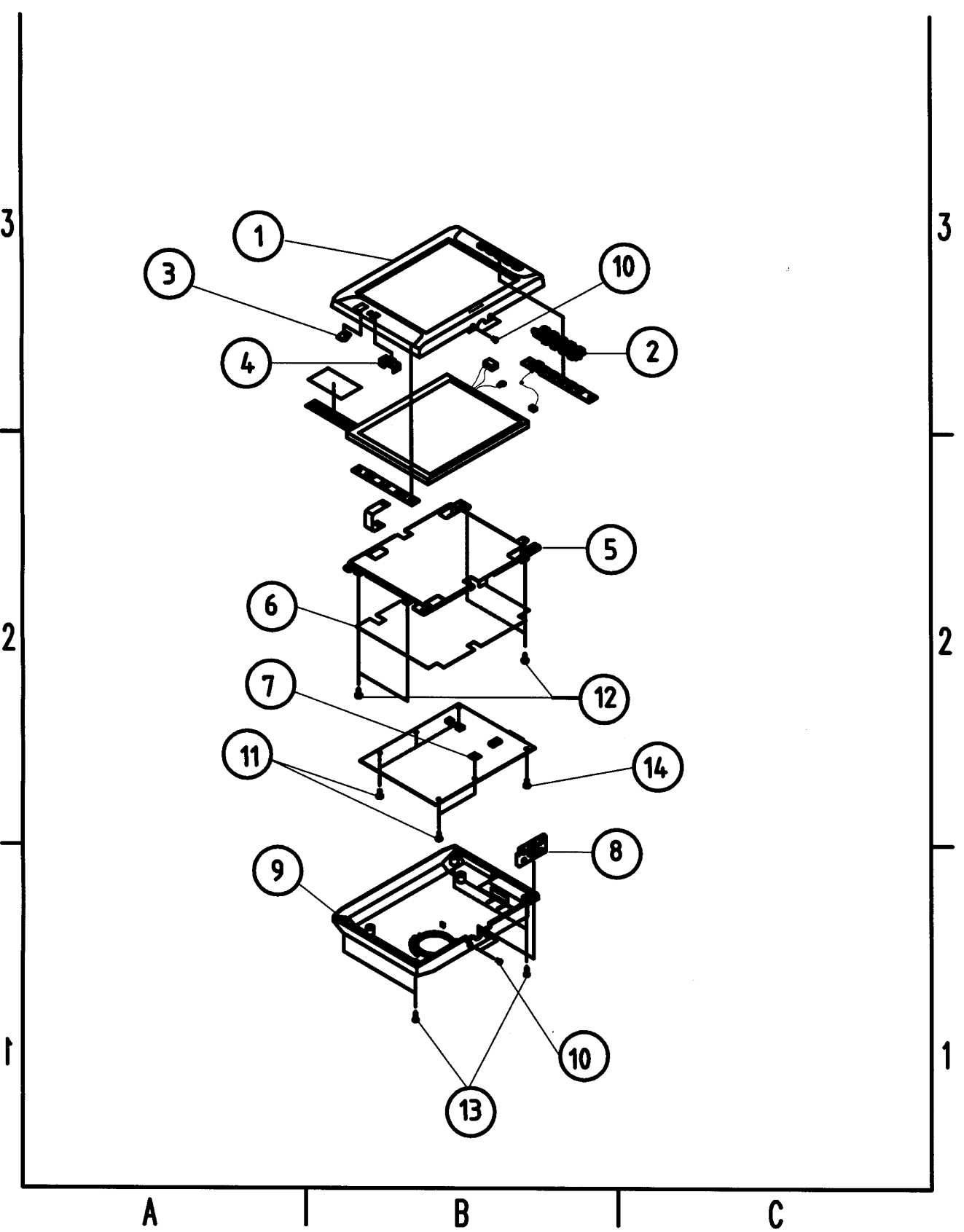
1
2
3
4
5
6
7
8
9
10
10
11
12
13
14
A
B
C
1
2
3

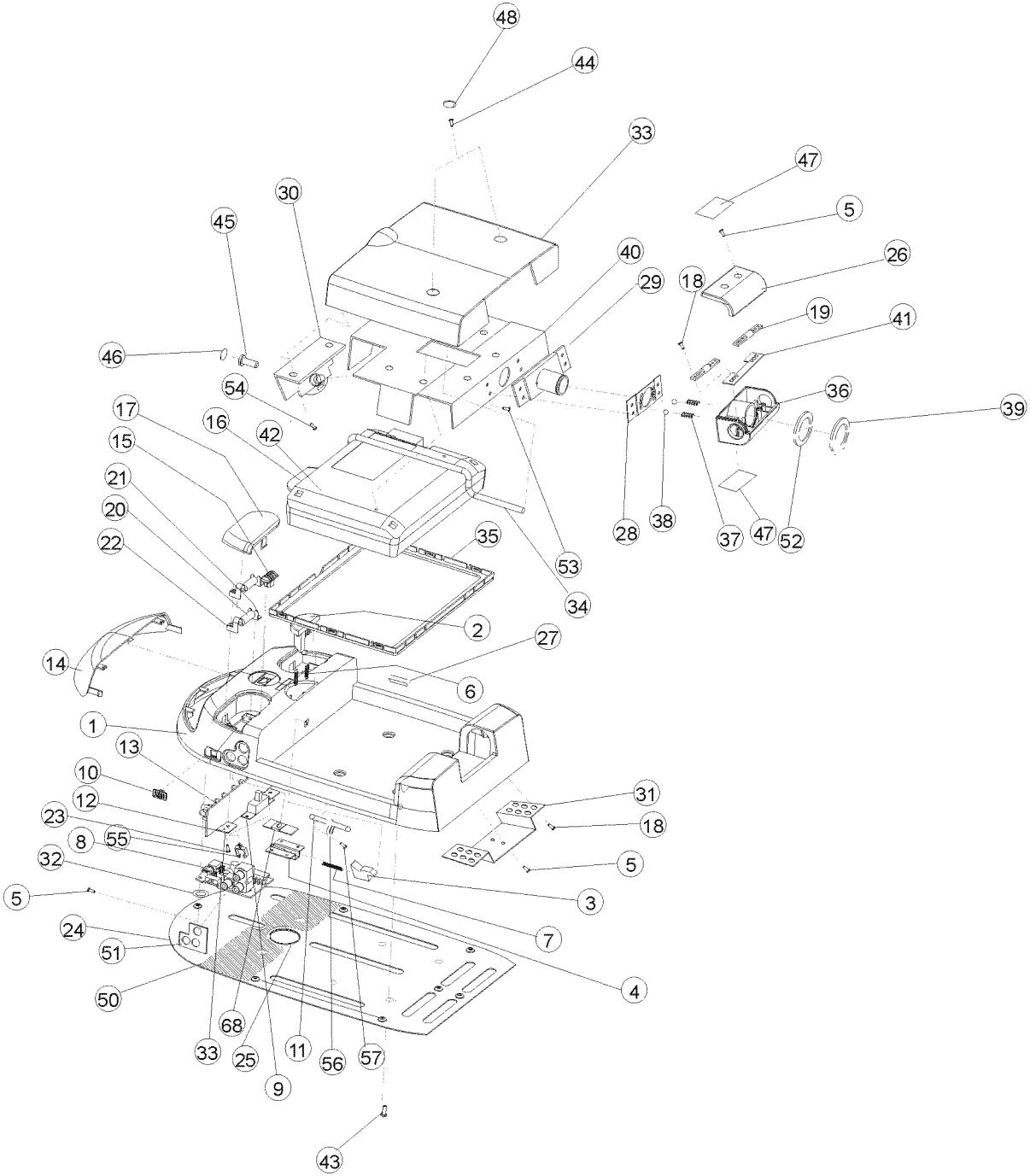
48
44
33
47
5
30
45
26
40
29
18
19
41
46
54
36
39
17
16
42
15
21
20
22
35
28
38
37
47
52
53
34
2
27
14
6
1
13
10
12
31
23
18
8
55
32
5
5
3
24
7
51
4
50
68
33
25
11
56
57
9
43

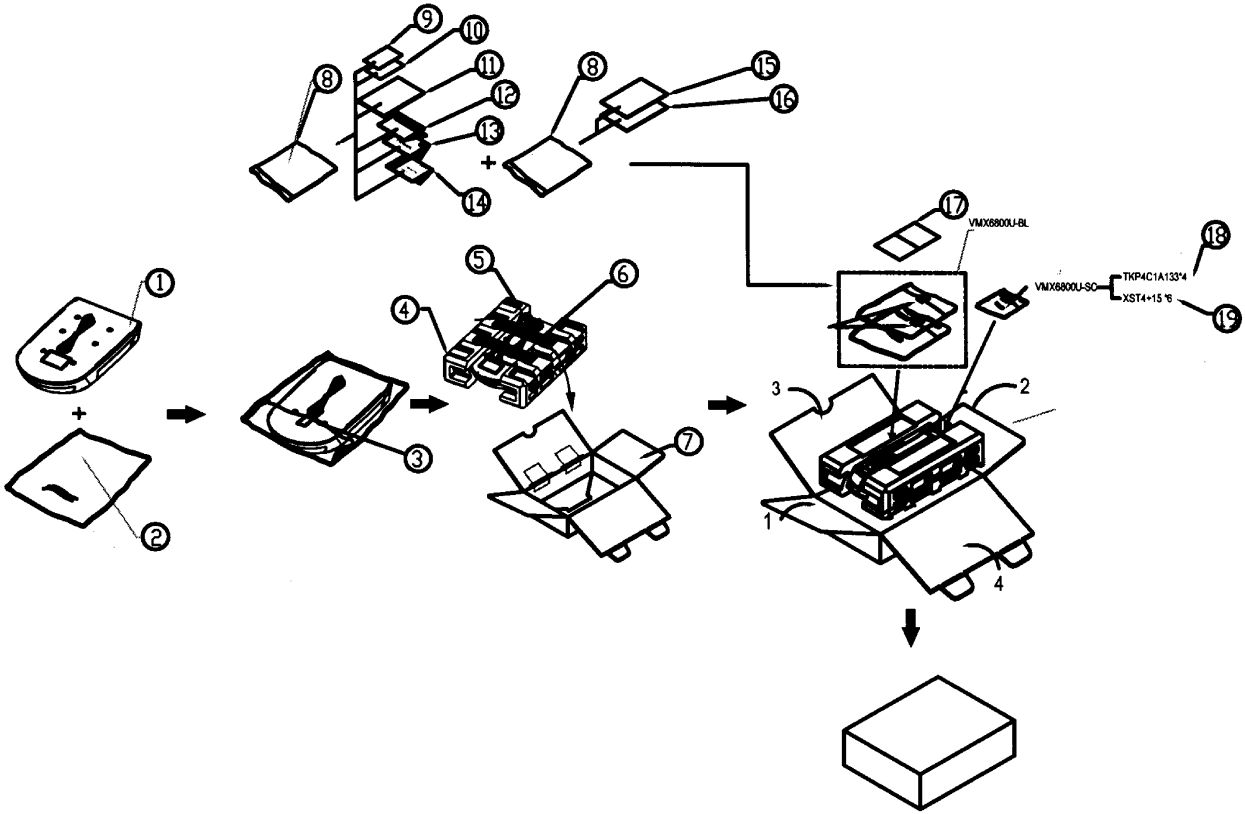

·Item number listed below should not order regular spare parts(not available)

NO.	PART NO.	PARTNAME&DESCRIPTION	REMARKS
1	CY-VMX6800U	6.8" COLOR LCD MONITOR	
2	TPE4C1A017	POLYLON	
3	B410-0080	TAPE(0.05M)*4	
4	TPD4C1A056	POLYLON	
5	TSX4C380	TPC4C1A320	
6	B410-0990	TAPE(0.25M)*2	
7	TPC4C1A320	PACKING CASE	
8	YEF4C190300	INSTRUCTION BOOK BAG*2	
9	TQD4C1A116	CIRCUIT LABEL	
10	TQF4C1A096	HP WARNING LABEL	
11	TQB4C1A238	INSTRUCTION BOOK	
12	YFM094C023ZA	SVC CARD(USA)	
13	YFM074C124ZA	WAYYANTY CARD	
14	YFM094C135ZA	WARRANTY	
15	YFM074C133ZA	WARRANTY CARD(CANADA)	
16	YFM024C196ZA	CANADA LABEL	
17	TKP4C1A133	SCREW SHEET	
18	XST4+15	SCREW*6	
19	YEF4C08120	SCREW BAG	

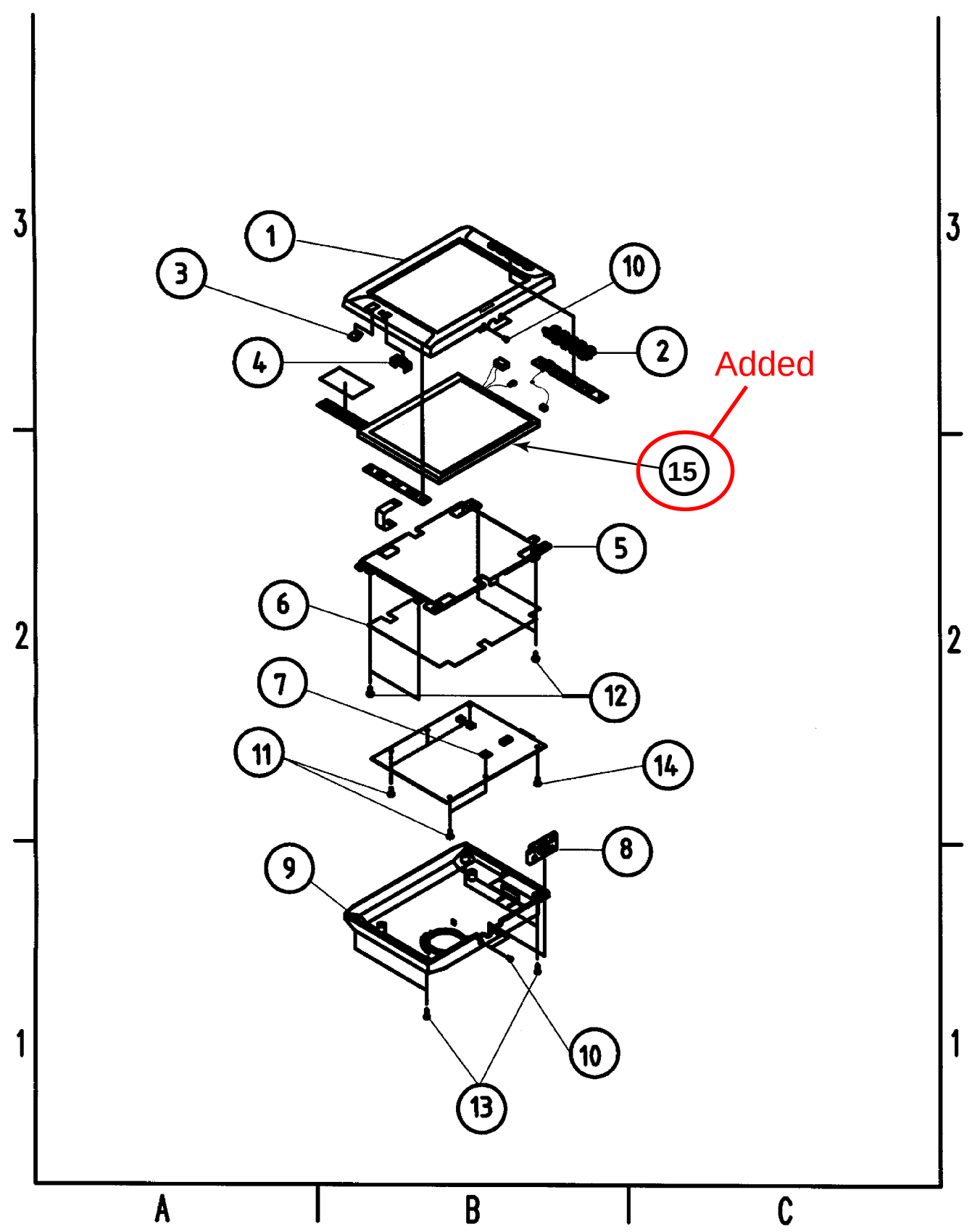
1
3
10
2
4
Added
15
5
6
12
7
11
14
8
9
10
13
3
2
1
A
B
C

TVSA0409

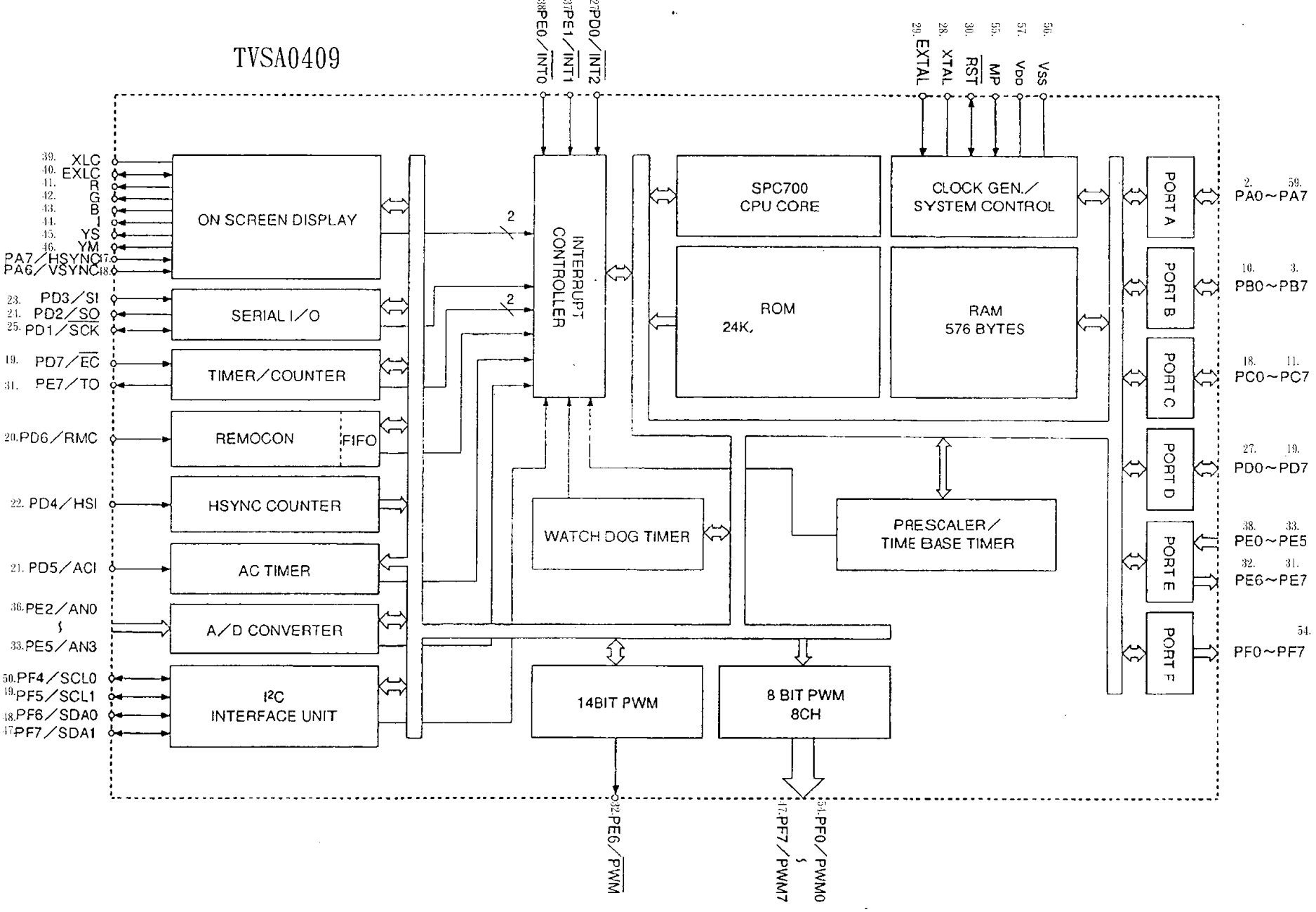
ON SCREEN DISPLAY
SERIAL I/O
TIMER/COUNTER
REMOCON
FIFO
HSYNC COUNTER
AC TIMER
A/D CONVERTER
I²C INTERFACE UNIT
INTERRUPT CONTROLLER
SPC700 CPU CORE
CLOCK GEN./ SYSTEM CONTROL
ROM 24K
RAM 576 BYTES
WATCH DOG TIMER
PRESCALER/ TIME BASE TIMER
14BIT PWM
8 BIT PWM 8CH
PORT A
PORT B
PORT C
PORT D
PORT E
PORT F
39. XLC
40. EXLC
41. R
42. G
43. B
44. I
45. YS
46. YM
PA7/HSYNC 17
PA6/VSYNC 18
23. PD3/SI
24. PD2/SO
25. PD1/SCK
19. PD7/EC
31. PE7/TO
20. PD6/RMC
22. PD4/HSI
21. PD5/ACI
36. PE2/AN0
33. PE5/AN3
50. PF4/SCL0
49. PF5/SCL1
48. PF6/SDA0
47. PF7/SDA1
38. PE0/INT0
37. PE1/INT1
27. PD0/INT2
29. EXTAL
28. XTAL
30. RST
55. MP
57. VDD
56. VSS
2. PA0~PA7 59.
10. PB0~PB7 3.
18. PC0~PC7 11.
27. PD0~PD7 19.
38. PE0~PE5 33.
32. PE6~PE7 31.
PF0~PF7 54.
32. PE6/PWM
47. PF7/PWM7
54. PF0/PWM0

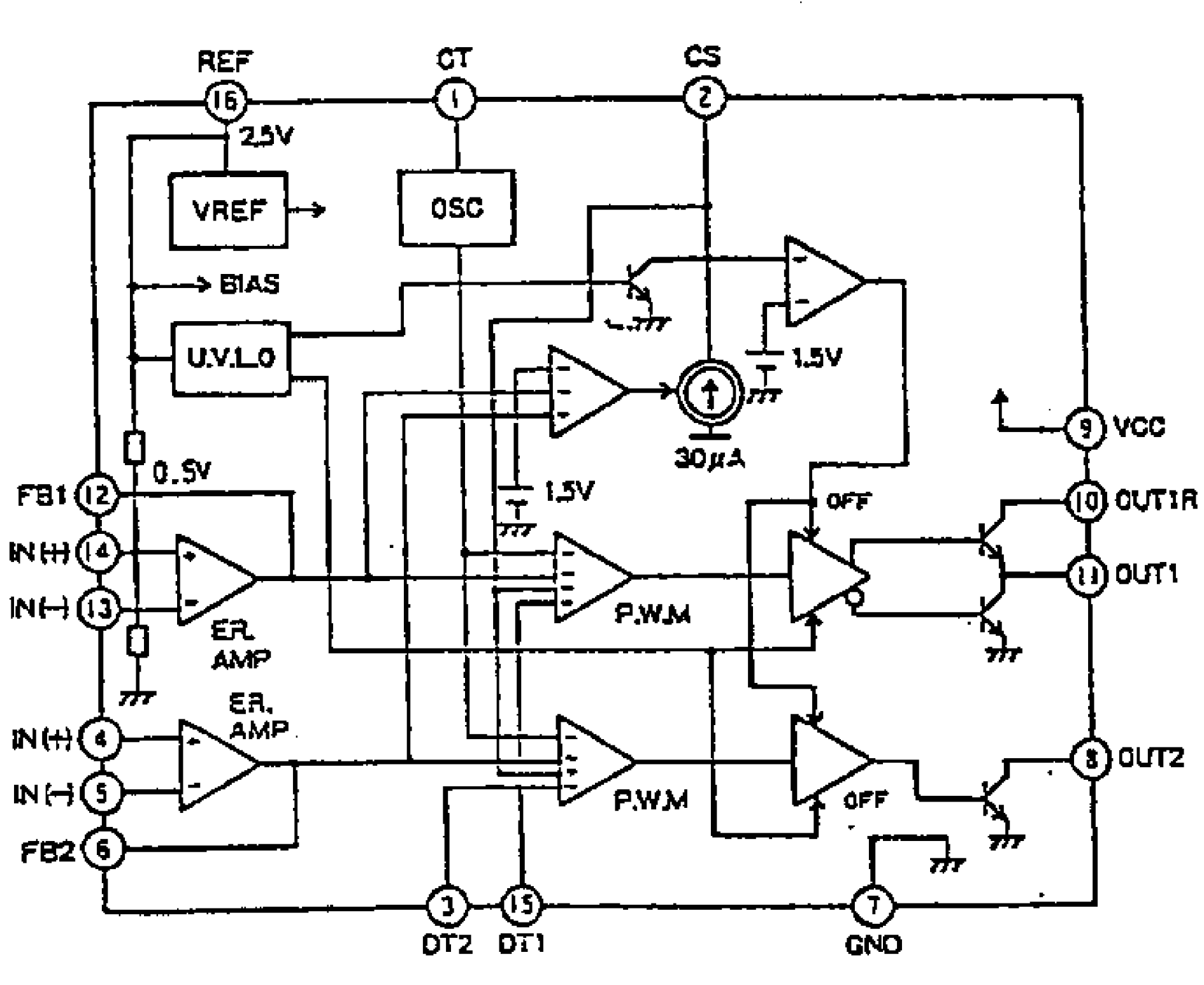
REF
CT
CS
16
1
2
2.5V
VREF
OSC
BIAS
U.V.L.O
1.5V
30μA
VCC
9
0.5V
FB1
12
1.5V
OFF
10
OUT1R
IN(+)
14
IN(-)
13
ER.
AMP
P.W.M
11
OUT1
ER.
AMP
IN(+)
4
IN(-)
5
P.W.M
OFF
8
OUT2
FB2
6
3
15
7
DT2
DT1
GND

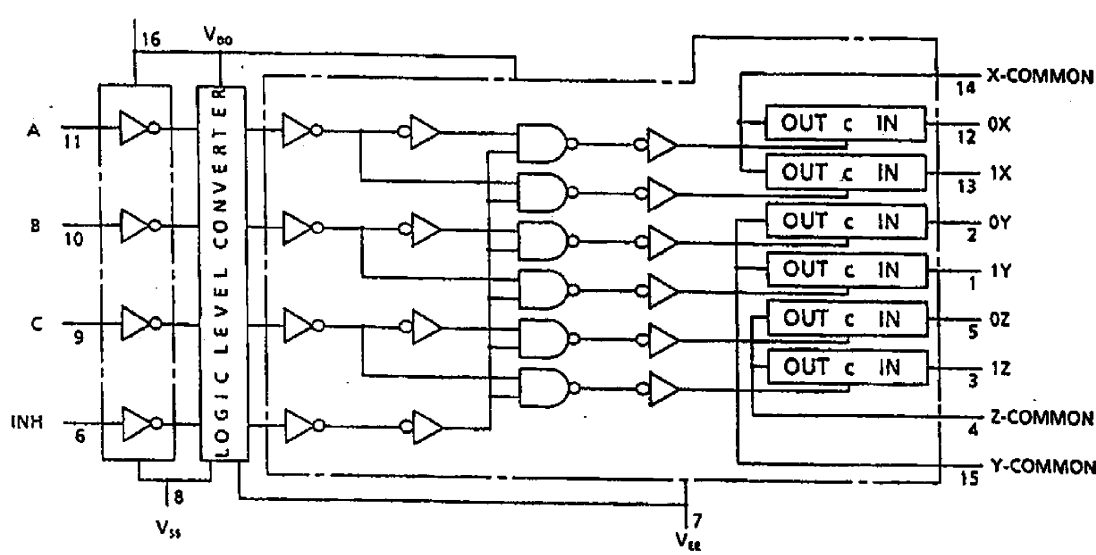
16
V_{DD}
A
11
B
10
C
9
INH
6
LOGIC LEVEL CONVERTER
8
V_{SS}
7
V_{EE}
OUT c IN
X-COMMON
14
0X
12
1X
13
0Y
2
1Y
1
0Z
5
1Z
3
Z-COMMON
4
Y-COMMON
15

IC1106
TC7W240FU

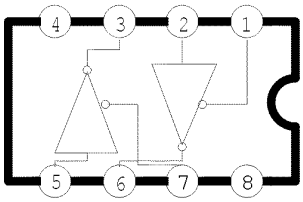

IC702
TA75S393F

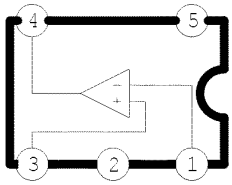

IC701
TA75W393FU

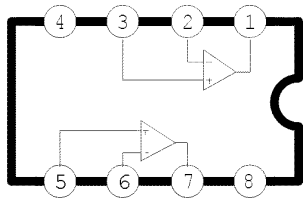

IC904
TA75W558FU

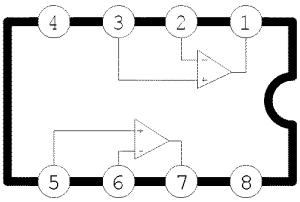

IC905
INZ1

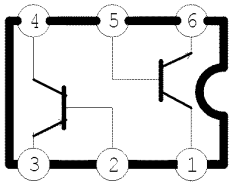

IC906
INZ1

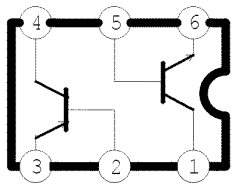

IC1108
TC7W14FU

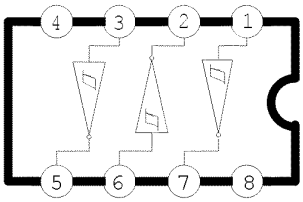

IC902
NJM2107F

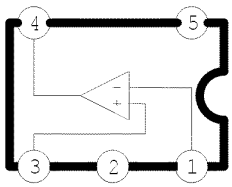

IC806
FMC4AT108

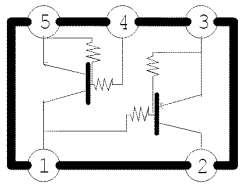

TA1107
TA75S393F

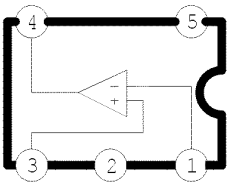

1R3Y26A1

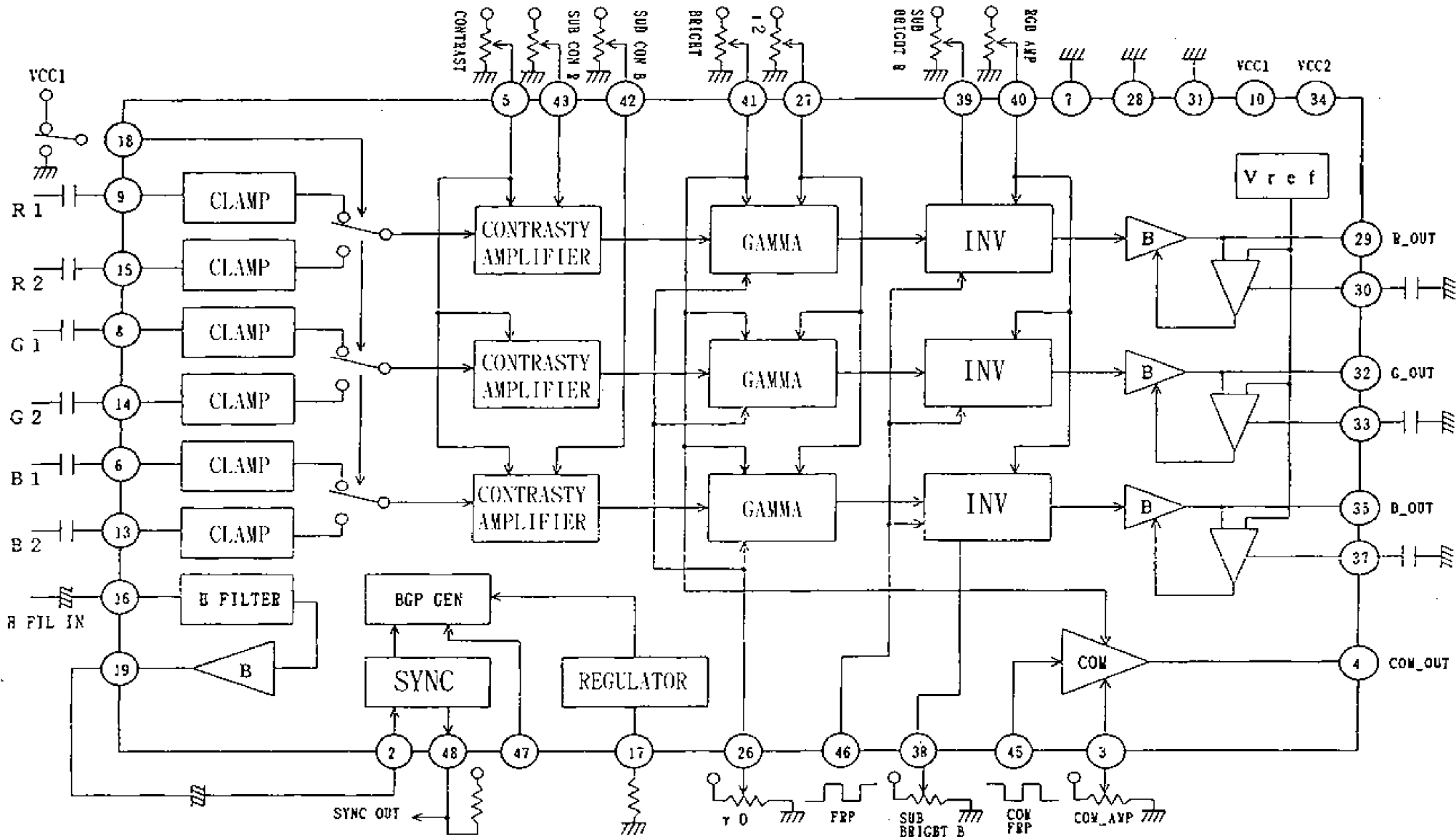
VCC1
CONTRAST
SUB CON B
SUB CON B
BRIGHT
I2
SUB BRIGHT B
RGB AMP
VCC1
VCC2
R 1
R 2
G 1
G 2
B 1
B 2
B FIL IN
CLAMP
CLAMP
CLAMP
CLAMP
CLAMP
CLAMP
B FILTER
B
CONTRASTY AMPLIFIER
CONTRASTY AMPLIFIER
CONTRASTY AMPLIFIER
GAMMA
GAMMA
GAMMA
INV
INV
INV
B
B
B
Vref
COM
BGP GEN
SYNC
REGULATOR
R_OUT
G_OUT
B_OUT
COM_OUT
SYNC OUT
γ 0
FRP
SUB BRIGHT B
COM FRP
COM_AMP

Note:

1. Be sure to make your order of replacement parts according to this list.
2. Important safty notice: Component , indentified by ⚠ mark have special characteristics important for safety. When replacing any of these components, use only manufacture's specified parts.
3. Location keys in the remarks column indicates the general location of the parts shown in the exploded drawing, as in a road map.
4. The marking (RTL) indicates that Retention Time is limited for this item. After the discontinuation of assembly in production , the item will continue to be available for a specific period of time. The retention period of availability is dependent on the type of assembly , and in accordance with the laws governing part and product retention. After the end of this period, the assembly will no longer be available.
5. "T" marks in remarks column are indicated supply parts of TMACO.

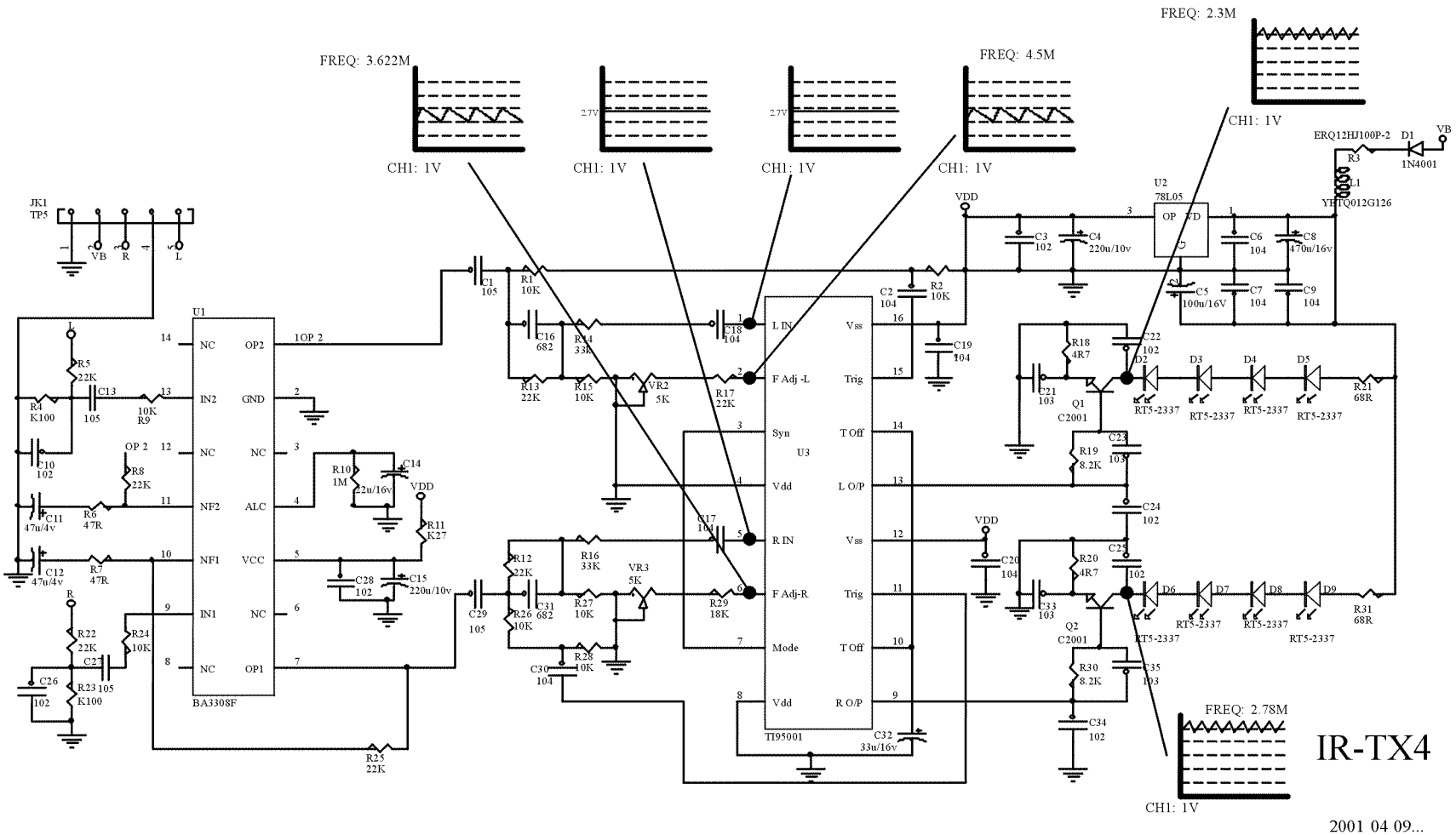
FREQ: 3.622M
CH1: 1V
FREQ: 4.5M
CH1: 1V
FREQ: 2.3M
CH1: 1V
FREQ: 2.78M
CH1: 1V
JK1
TP5
VB
R
L
U1
BA3308F
NC
OP2
IN2
GND
NF2
ALC
NF1
VCC
IN1
OP1
1OP 2
OP 2
U3
TI95001
L IN
F Adj -L
Syn
Vdd
R IN
F Adj-R
Mode
Vdd
Vss
Trig
T Off
L O/P
R O/P
U2
78L05
OP
VD
ERQ12HJ100P-2
D1
1N4001
L1
YHTQ012G126
Q1
C2001
Q2
C2001
RT5-2337
IR-TX4
2001 04 09...
Pro2 FM Stereo Transmitter

TNP4C0015A-2
TNP4C0016A-2
TNP4C0017A-2
IC601
Chroma_Output
IC901
TFT_LCD_Controller
IC101
TC90A49
IC151
Chroma_Processor
IC152
M62353SP-B2
IC103
EEPROM
IC104
TC90A04
IC105
IC106
IC107
IC108
IC109
IC110
IC111
IC112
IC113
IC114
IC115
IC116
IC117
IC118
IC119
IC120
IC121
IC122
IC123
IC124
IC125
IC126
IC127
IC128
IC129
IC130
IC131
IC132
IC133
IC134
IC135
IC136
IC137
IC138
IC139
IC140
IC141
IC142
IC143
IC144

TNP4C0044-CM

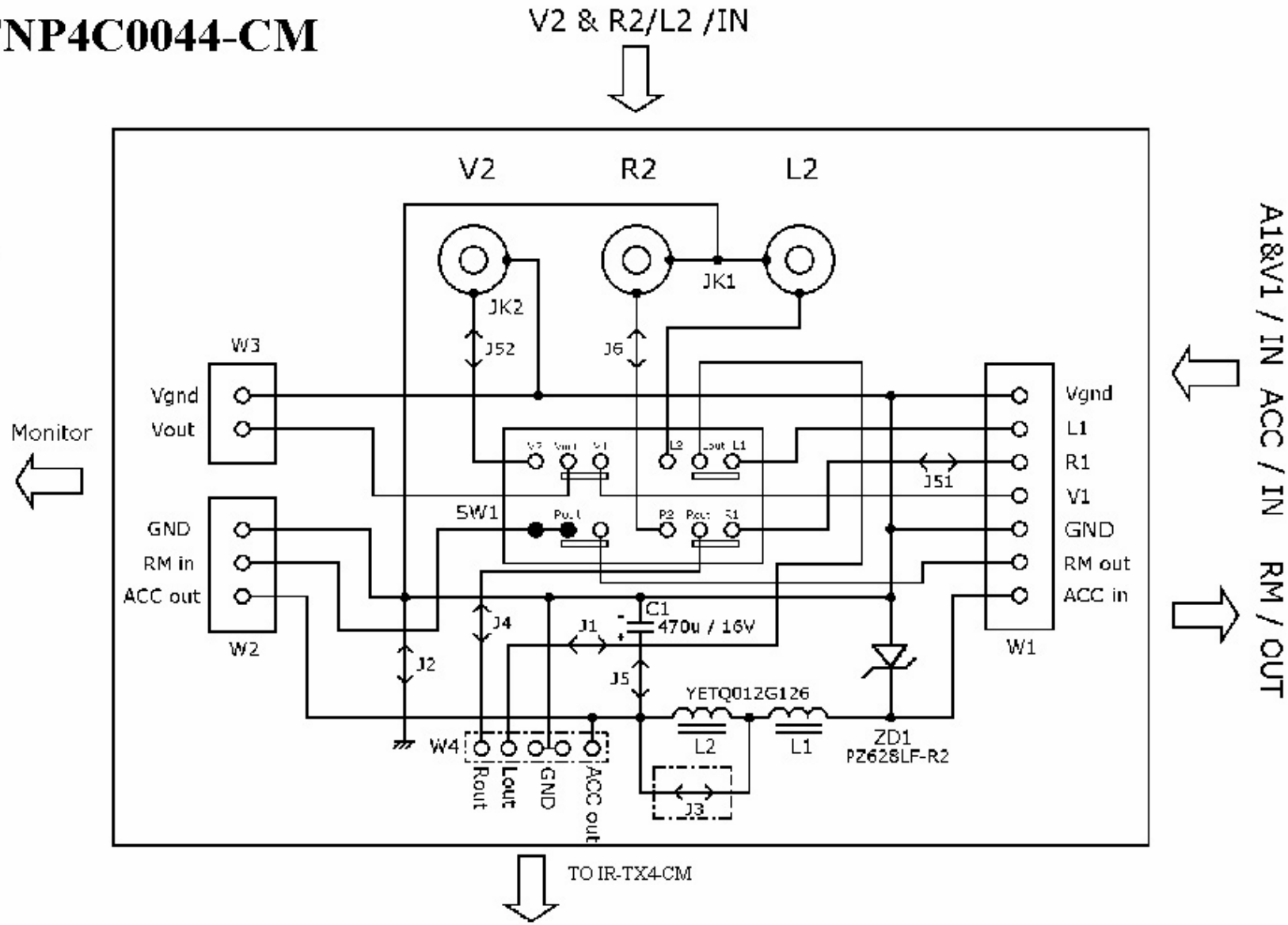

TNP4C0045-CM

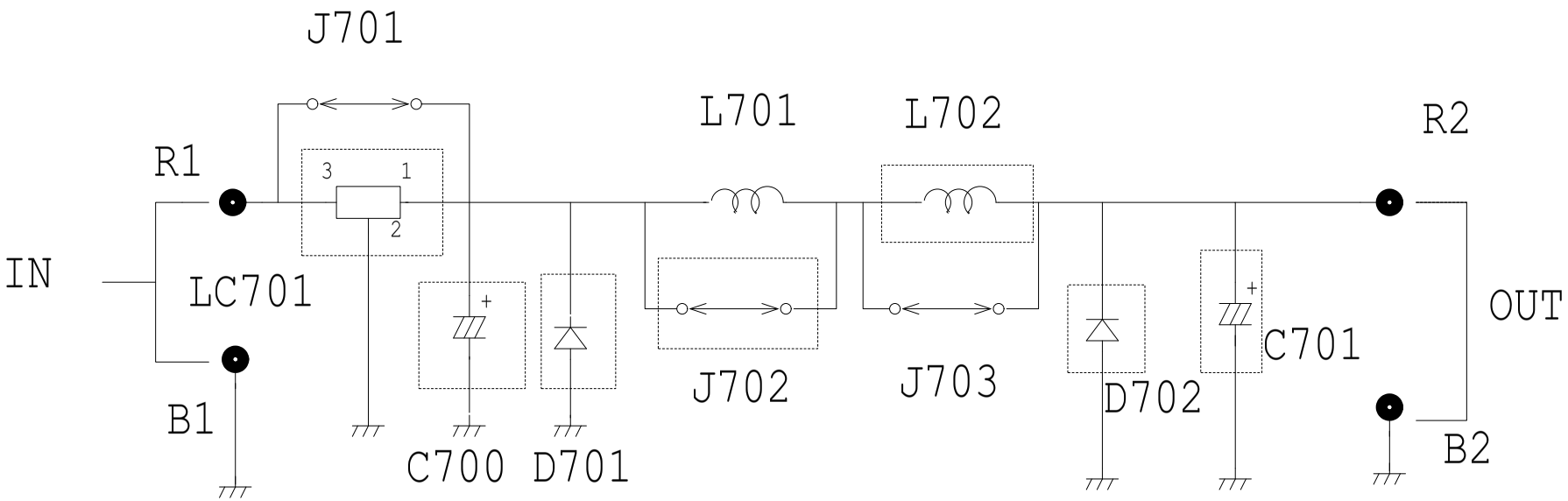

Specifications*

Overall System

Power supply :12V DC(10.8V-16V)
Test Voltage 13V,
Negative ground

Current consumption :Less than 1.0A

Usage Temperature Range :0℃ to +40℃

Storage Temperature range :-20℃ to +80℃

Display Unit

Liquid Crystal Panel :6.8"wide

Screen dimensions :With 140mm(5-1/2")
Height 105mm(2-1/8")
Diagonal 175mm(6-13/16")

Number of Pixels :269,568 pixels

Display Method :Transparent color filter format

Drive Method :TFT(Thin Film Transistor)

Light Soure :internal light (U-shaped, color cathode fluorescent light)

Sound Output System :wireless earphone

connection Terminals :Power,DC 12V (12V STD.)
Power ground
Remote out(RCApin)
LAMP DC 12V power
LAMP DC 12 ground (Door)
LAMP DC 12 ground (Battery)
AV input VTR1 and input VTR2 terminals
VTR1:Video 1Vp-p(75Ω/RCA pin)
Audio 0.5Vrms(RCA pin)(R/L)
Video 1Vp-p(75Ω/RCA pin)
VTR2:Audio 0.5Vrms(RCA pin)(R/L)
※ ON THE BODY

Dimensions**(W×H×D)
Display Unit :347×212×63(mm)
(13-11/16"×8-5/16"×2-7/16")

Weight**
Display Unit :5 lb.7 oz.(2.47kg)

*Specifications and the design are subject to possible modification without notice due to improvements.

**Dimensions and weight shown are approximate.

***Above specifications comply with EIA stansards.

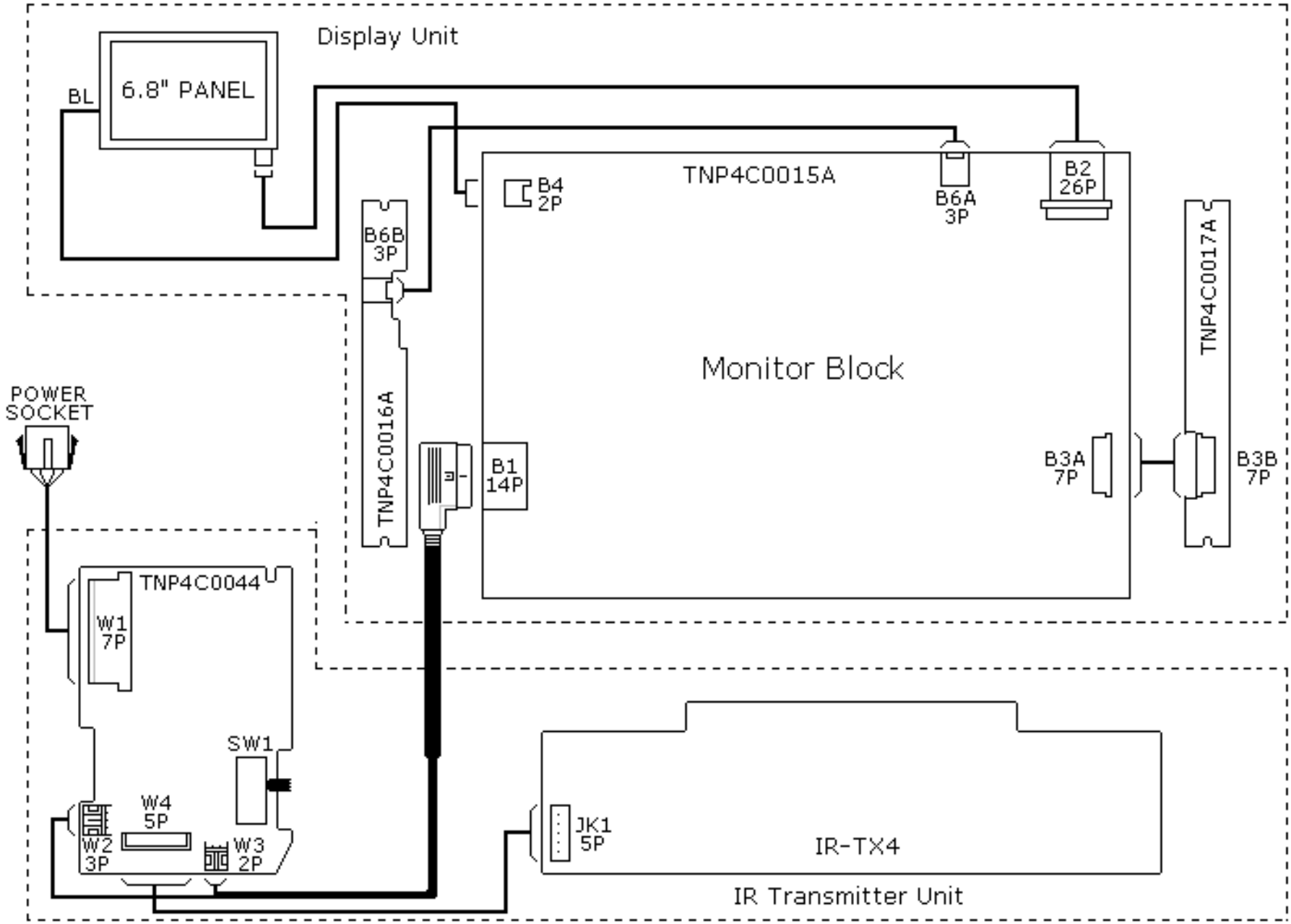
Display Unit
6.8" PANEL
BL
TNP4C0015A
B4
2P
B6A
3P
B2
26P
B6B
3P
TNP4C0017A
Monitor Block
TNP4C0016A
B1
14P
B3A
7P
B3B
7P
POWER
SOCKET
TNP4C0044
W1
7P
SW1
W4
5P
W2
3P
W3
2P
JK1
5P
IR-TX4
IR Transmitter Unit

CAR IR-TX1
2001 03 05.
U1
BA3308F
R10 1M
C28 102
C29 105
R22 22K
R27 22K
R26 10K
R28 10K
R16 33K
C31 104
C12 104
R29 10K
C20 104
C30 104
R20 102
C31 104
R30 33K
IC2 C34
IC3 C35
R19 22K
C23 102
C24 102
C25 102
C19 104
R18 22K
C21 103
C22 102
R7 22K
VR2 5K
C18 104
R4 33K
R3 22K
R2 10K
R1 10K
C2 104
C1 105
C6 102
VR3 5K
C3 102
R9 10K
R10 10K
R11 10K
C13 105
R12 10K
R24 10K
C22 105
R25 22K
R23 10K
C26 102
R6 22K
R23 10K
R22 22K
C7 102
C9 104

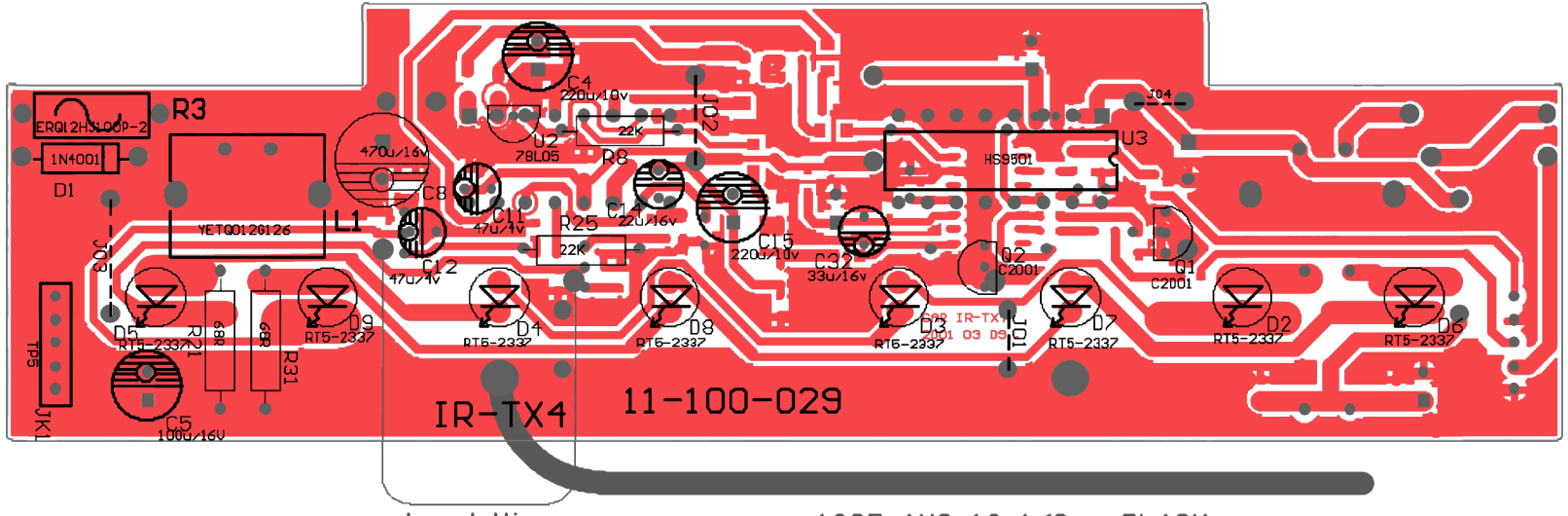
R3
ERQ12HJ100P-2
1N4001
D1
YETQ0126126
L1
470u/16v
C8
C11
47u/4v
C12
47u/4v
C4
220u/10v
U2
78L05
R8
22K
R25
22K
C1
22u/16v
C15
220u/10v
C32
33u/16v
U3
HS9501
J04
Q2
C2001
Q1
C2001
D5
RT5-2337
R31
68R
R31
68R
D9
RT5-2337
D4
RT5-2337
D8
RT5-2337
D3
RT5-2337
D7
RT5-2337
D2
RT5-2337
D6
RT5-2337
TP5
JK1
C5
100u/16V
IR-TX4
11-100-029
Lead Wire
50mm
1007 AWG-18 160mm BLACK

[TNP4C0016A]
[Bottom View]

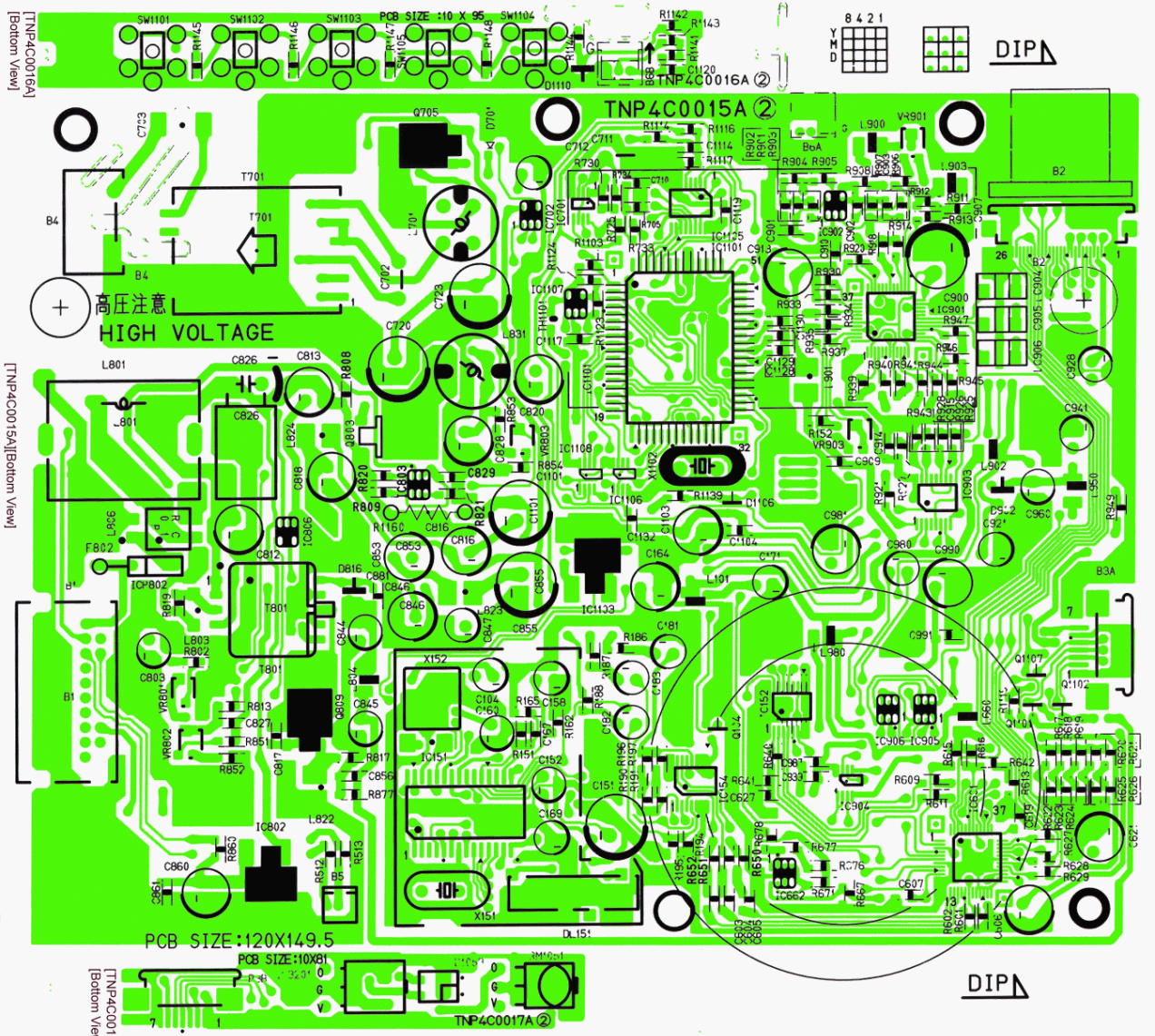

[TNP4C0015A][Bottom View]

[TNP4C0017A]
[Bottom View]

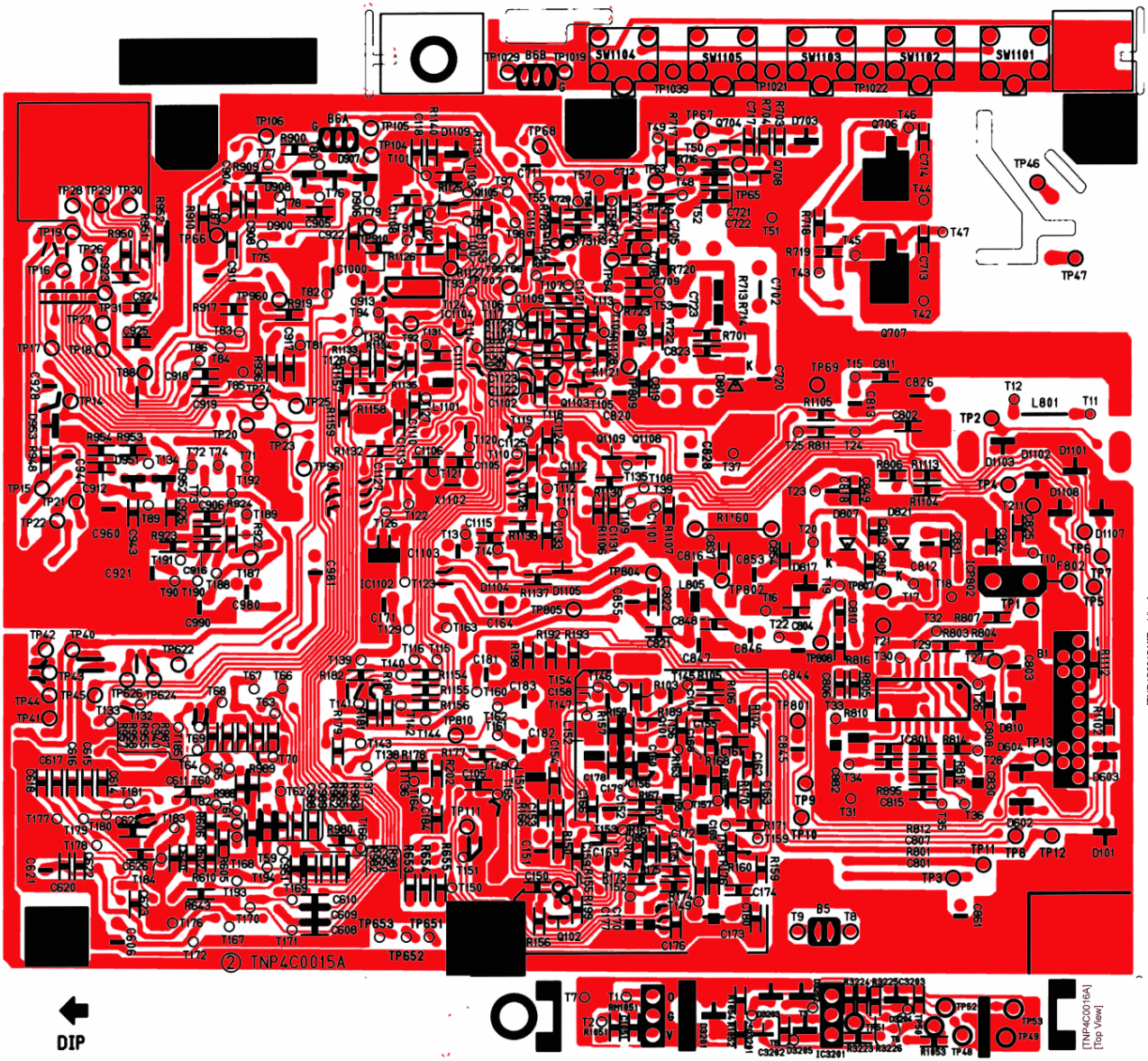
[TNP4C0017A]
[Top View]
[TNP4C0015A][Top View]
[TNP4C0016A]
[Top View]
② TNP4C0015A
DIP

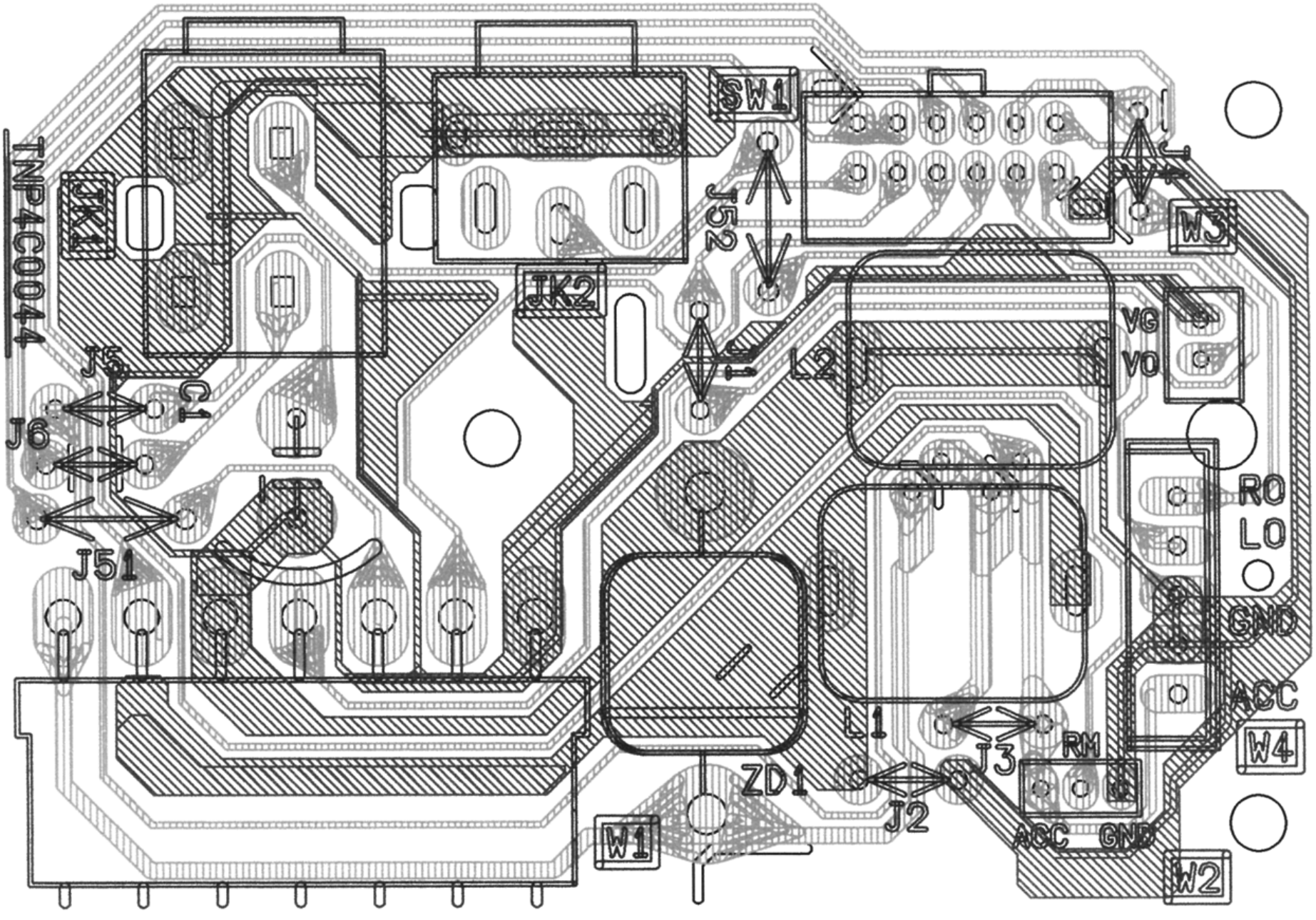
TNP4C0044
JK1
JK2
SW1
J52
W3
VG
VO
L2
J5
C2
J6
J51
RO
LO
GND
ACC
W4
L1
J3
RM
ZD1
J2
ACC
GND
W1
W2

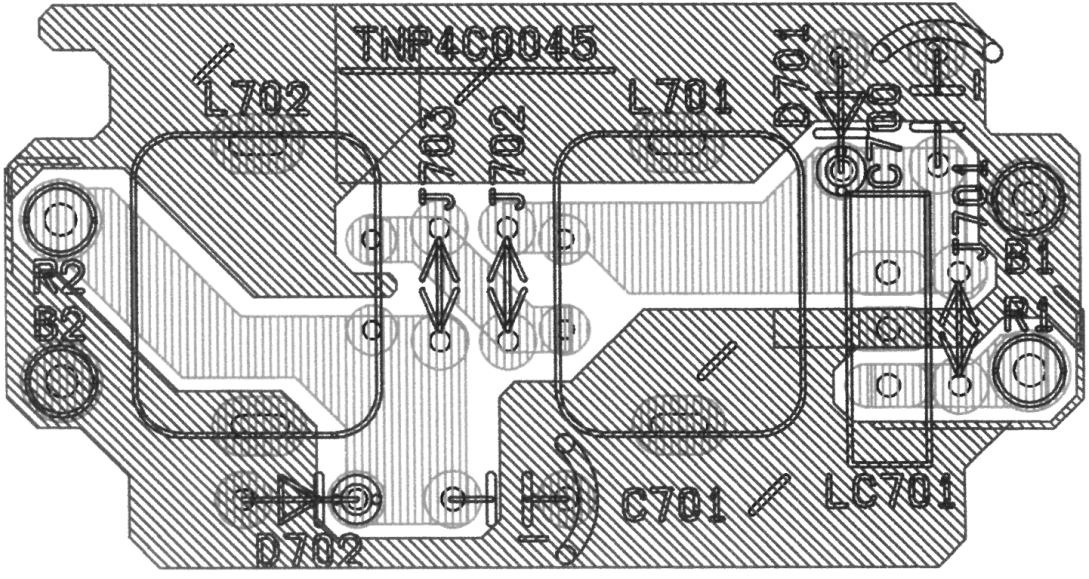
TNP4C0045
L702
L701
D701
C703
J703
J702
J701
B1
R1
R2
B2
D702
C701
LC701