SANYO

MODEL

TH-630

All-transistor Radio

Service Manual

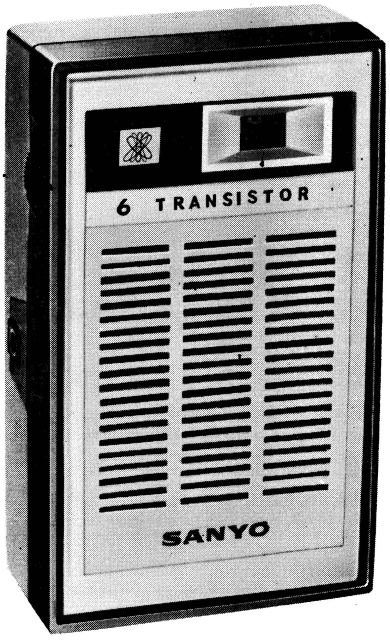

SPECIFICATIONS

FREQUENCY RANGE
540 to 1600 KC

INTERMEDIATE FREQUENCY
455 KC

OUTPUT POWER
Undistorted approx. 120mW, Maximum approx. 180mW

LOUDSPEAKER
2½″ Permanent Dynamic Speaker
voice coil impedance 70 ohms

TRANSISTOR COMPLEMENT
1 Frequency Converter
2 IF Amplifier
1 AF Amplifier
2 Power Amplifier

DIODE & THERMISTOR USED
1 Diode·····Detector & AGC
1 Thermistor·····Temperature compensator

CABINET DIMENSIONS
4⅛″ × 2½″ × 1¼″

NET WEIGHT
Approximately 7.2 ozs (Excl. battery)
8.6 ozs (incl. battery)

BATTELY
UM–3 × 3 (4.5V)

SANYO ELECTRIC CO., LTD.

PART NO.	STOCK NO.	DESCRIPTION			
FIXED RESISTORS					
R 1		6.8	Kohms	±10%	1/4W
R 2		8.2	〃	〃	〃
R 3		4.7	〃	〃	〃
R 4		1.8	〃	〃	〃
R 5		390	ohms	〃	〃
R 6		270	〃	〃	〃
R 8		6.8	Kohms	〃	〃
R 9		33	〃	〃	〃
R 10		220	ohms	〃	〃
R 11		68	〃	〃	〃
R 12		180	〃	〃	〃
R 13		2.8	Kohms	〃	〃
R 14		2.7	〃	〃	〃

PART NO.	STOCK NO.	DESCRIPTION
CABINET AND MISCELLANEOUS		
	R-315022	Cabinet -Front enclosure
	R-315023	Back cover
	R-265049a	Decolation metal
	R-265048	Panel
	R-265047L	Badge
	R-475039	Battery instruction sheet
	R-47040	Specification sheet
	R-245048	Stud nut
	R-335034	Tuning control knob
	R-32279	Volume control knob
	R-S2509	Earphone jack
	R-CXC002	CR Package

SERVICE HINTS

(1) When the radio receiver does not function, check battery first.
If voltage of battery is lower than 3 volts, replace new battery.

(2) With reference to the transistor used in this set, note that the base is the signal input terminal (corresponding to signal grid of tubes) and the collector is the signal output terminal (corresponding to plate of tubes).
Furthermore, the emitter is common terminal.

(3) Accordingly, defect can be traced in the same way as in case of tube radio, using the signal generator.

(4) High side terminal of the signal generator should be connected with the capacitor, so that the output bias-voltage will not be affected.

(5) In order to protect transistors when tracing defects, avoid the following.
1) Wrong polarity.
2) Checking circuit continuity with the receiver on.
3) To use soldering iron, when replacing transistors or component parts.

(6) Output circuit is B class push pull system. Note that the input signal under B class push pull system increases the collector current.

(7) AGC properly functions if emitter current of the Tr2 (1st IF Amp. stage) goes down as input signal increases.

(8) Local oscillator properly function if distinct "Click" is heard when the lug of gang OSC side is touched with a conductor, for example, screw driver, if slight noise is heard, oscillator does not function.

(9) Use vacume tube volt-meter or high resistance volt-meter to use the voltage of the transistors.

(10) Readjustment shall be made when converter stage or IF Amp. stage is replaced.

(11) Note that the unbalanced power Amp. stage causes poor tone.

SPECIFICATIONS SUBJECT TO CHANGE WITHOUT NOTICE.

Printed in Japan

CIRCUIT DIAGRAM

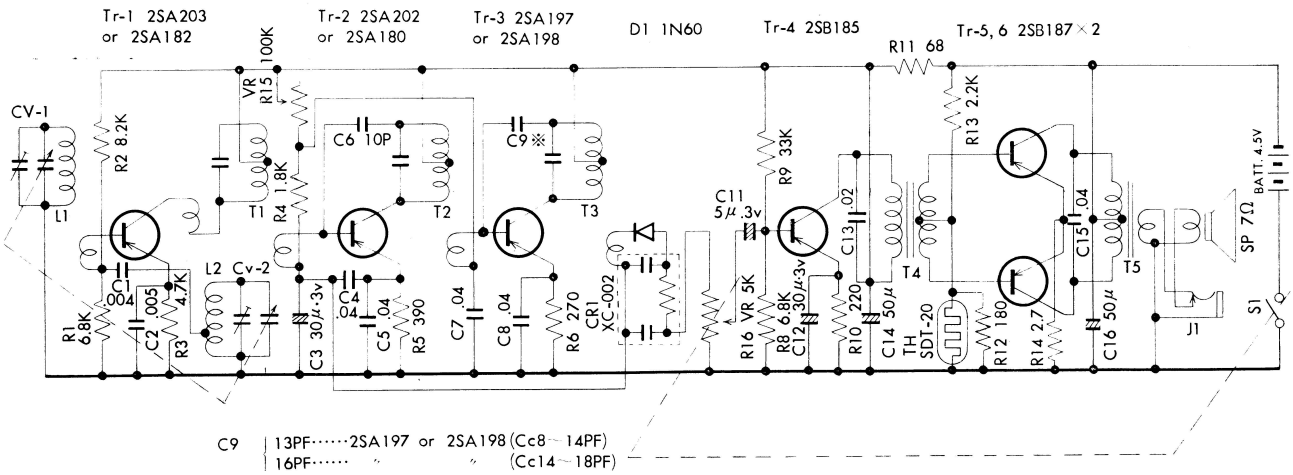

ALIGNMENT PROCEDURES

Apply volt-meter across the voice coil. Valume control should be at maximum position.

Output of signal generator should be no higher than necessary to obtain output reading.

STEP	SIGNAL GENERATOR COUPLING	SIGNAL GENERATOR FREQUENCY	RADIO DIAL SETTING	ADJUST FOR MAXIMUM OUTPUT
IF ALIGNMENT				
1	Radiate signal through the loop antenna, which connected with signal generator output cable.	455 kc	lower end	IF Transformer
BROADCAST RF ALIGNMENT				
2	Radiate signal through the loop antenna, which connected with signal generator out put cable.	520 kc	Lower end	L2
3		1650 kc	upper end	Cv-2 Trimmer
4		Repeat step 2 and 3.		
5		600 kc	600 kc	L1
6		1400 kc	1400 kc	Cv-1 Trimmer
7		Repeat step 5 and 6.		

MAIN PARTS TERMINAL IDENTIFICATIONS

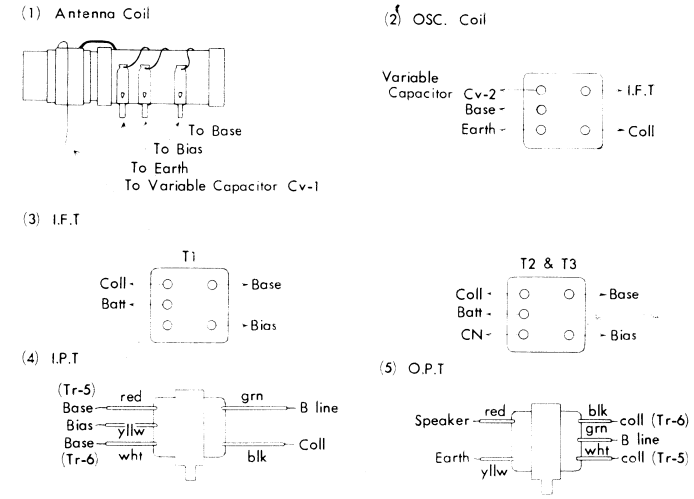

CONSTRUCTIONS

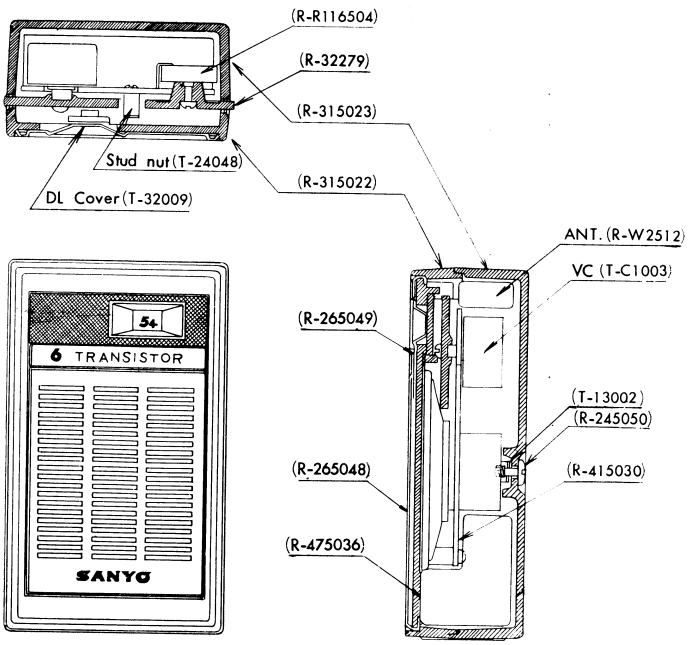

INTER PARTS CONNECTION

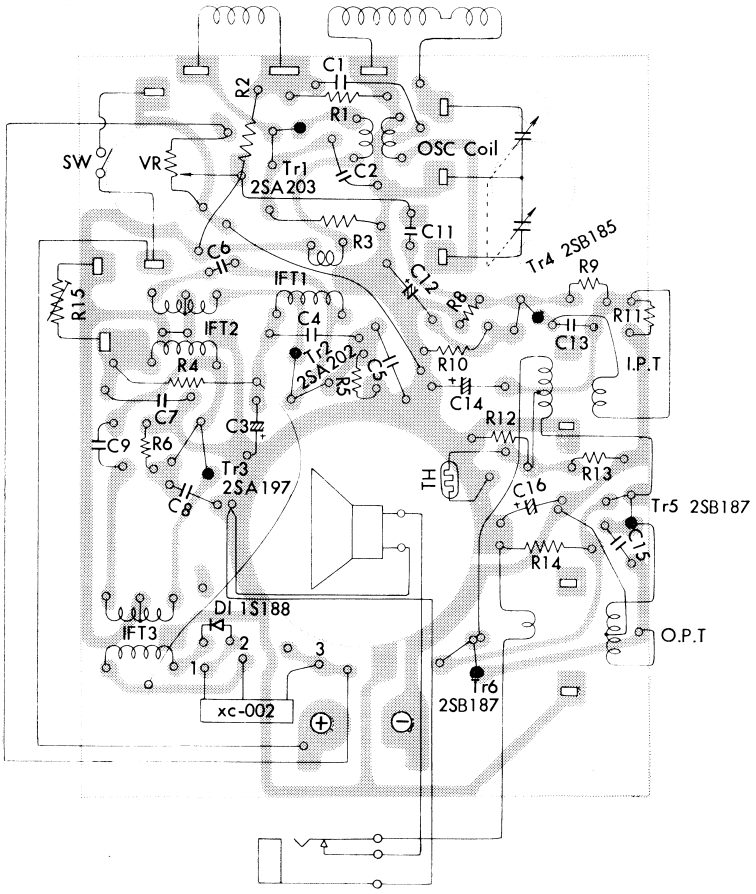

PART NO.	STOCK NO.	DESCRIPTION		
FIXED CAPACITORS				
C 1		0.004 μF	30, − 20%	50WV
C 2		0.005 μF	〃	〃
C 3		30 μF		3 〃 Electrolytic
C 4		0.04 μF	80, − 20%	25 〃
C 5		〃	〃	〃
C 6		10 pF	±10%	〃
C 7		0.04 μF	80, − 20%	〃
C 8		〃	〃	〃
C 9		13or16pF	±10%	〃
C 11		5 μF		6 〃 Electrolytic
C 12		30 〃		3 〃 Electrolytic
C 13		0.02 〃	30, − 20%	50 〃
C 14		50 〃		9 〃 Electrolytic
C 15		0.04 〃	80, − 20%	25 〃
C 16		50 〃		9 〃 Electrolytic