NATIONAL MODEL T100

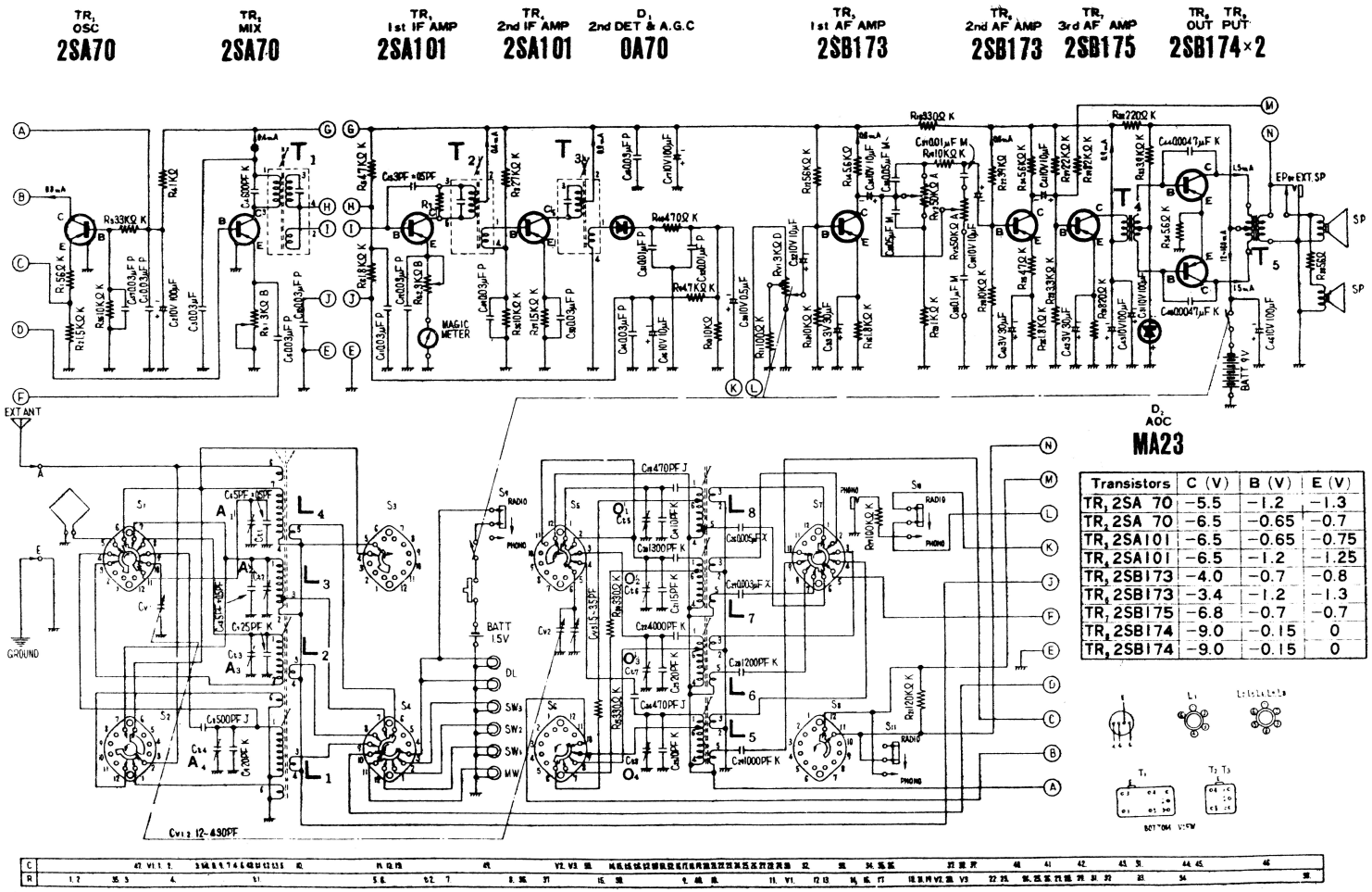

Transistors	C (V)	B (V)	E (V)
TR_1 2SA 70	−5.5	−1.2	−1.3
TR_2 2SA 70	−6.5	−0.65	−0.7
TR_3 2SA101	−6.5	−0.65	−0.75
TR_4 2SA101	−6.5	−1.2	−1.25
TR_5 2SB173	−4.0	−0.7	−0.8
TR_6 2SB173	−3.4	−1.2	−1.3
TR_7 2SB175	−6.8	−0.7	−0.7
TR_8 2SB174	−9.0	−0.15	0
TR_9 2SB174	−9.0	−0.15	0

SPECIFICATIONS

Frequency Range :	MW	535 ~ 1605 KC (560.7~186.9 m)
	SW_1	1.6 ~ 4.6 MC (187.5 ~ 65.2 m)
	SW_2	4.6 ~ 12.0 MC (65.2 ~ 25.0 m)
	SW_3	12.0 ~ 26.1 MC (25.0 ~ 11.5 m)
Intermediate Frequency :	455 KC	
Sensitivity :	MW	100 μV/m/50mW
	SW_1	100 μV/m/50mW
	SW_2	100 μV/m/50mW
	SW_3	100 μV/m/50mW
Power Output :	500mW	undistorted
	800mW	maximum

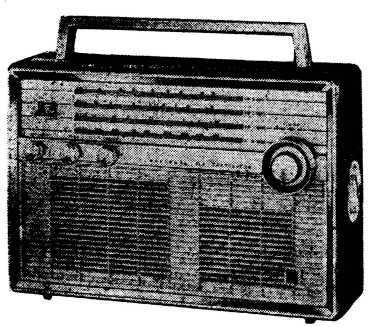

ALIGNMENT PROCEDURE

OUTPUT METER ..... Connect Output Meter across speaker voice coil terminals EXT. (speaker terminal).
OUTPUT LEVEL ..... Attenuate Test Oscillator output always to maintain 1 volt on Output Meter to prevent overloading of the receiver.
TEST OSCILLATOR ..... Modulate Test Oscillator at 400 c/s and connect the lead wire of Test Oscillator output to Radiation Loop Coil.
RADIO RECEIVER..... Set volume control to maximum and tone control to flat. (Knob center)

TABLE

Step	Band Switch Position	Test Oscillator		Radio Receiver	
		Connection to radio receiver	Dial setting	Dial setting	Adjust for maximum output
1	MW	Use radiation loop coil. (See Fig. 1.)	455 KC	Quiet point	Top screws of IF transformers
2			600 KC	600 KC	Screw of MW OSC coil (L_5) & Inductance of MW ANT coil (L_1)
3			1500 KC	1500 KC	Screw of MW OSC trimmer (Ct_5) Screw of MW ANT trimmer (Ct_1)
4			600 KC & 1500 KC	600 KC & 1500 KC	Repeat steps (2) and (3).
5	SW_1		1.8 MC	1.8 MC	Screw of SW_1 OSC coil (L_7) & Inductance of SW_1 ANT coil (L_3)
6			4.5 MC	4.5 MC	Screw of SW_1 OSC trimmer (Ct_6) Screw of SW_1 ANT trimmer (Ct_2)
7			1.8 MC & 4.5 MC	1.8 MC & 4.5 MC	Repeat steps (5) and (6).
8	SW_2		5 MC	5 MC	Screw of SW_2 OSC coil (L_6) & Screw of SW_2 ANT coil (L_2)
9			12 MC	12 MC	Screw of SW_2 OSC trimmer (Ct_7) Screw of SW_2 ANT trimmer (Ct_3)
10			5 MC & 12 MC	5 MC & 12 MC	Repeat steps (8) and (9).
11	SW_3		12 MC	12 MC	Screw of SW_3 OSC coil (L_7) & Screw of SW_3 ANT coil (L_1)
12			26 MC	26 MC	Screw of SW_3 OSC trimmer (Ct_8) Screw of SW_3 ANT trimmer (Ct_4)
13			12 MC & 26 MC	12 MC & 26 MC	Repeat steps (11) and (12).
14	Check if the above dial setting for SW band are not made at image frequency.				

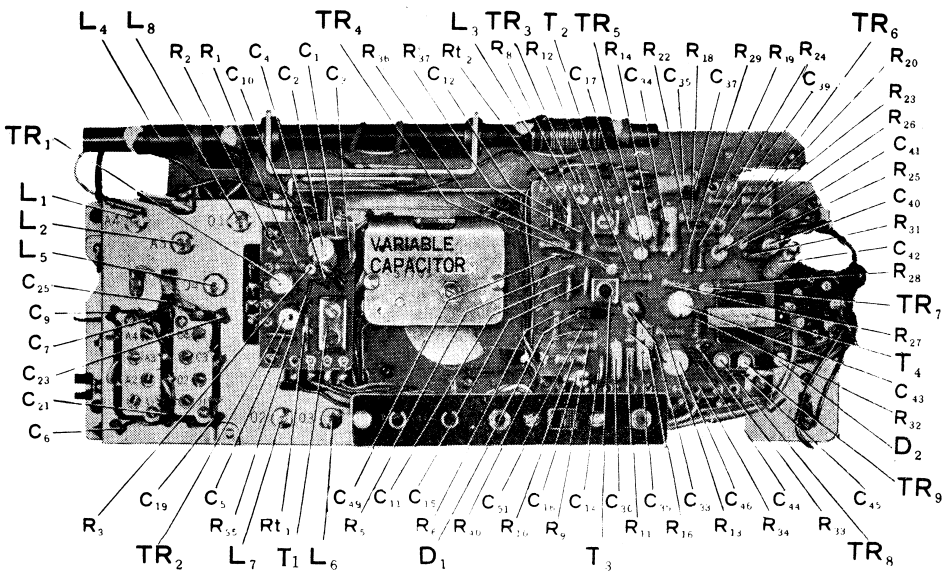

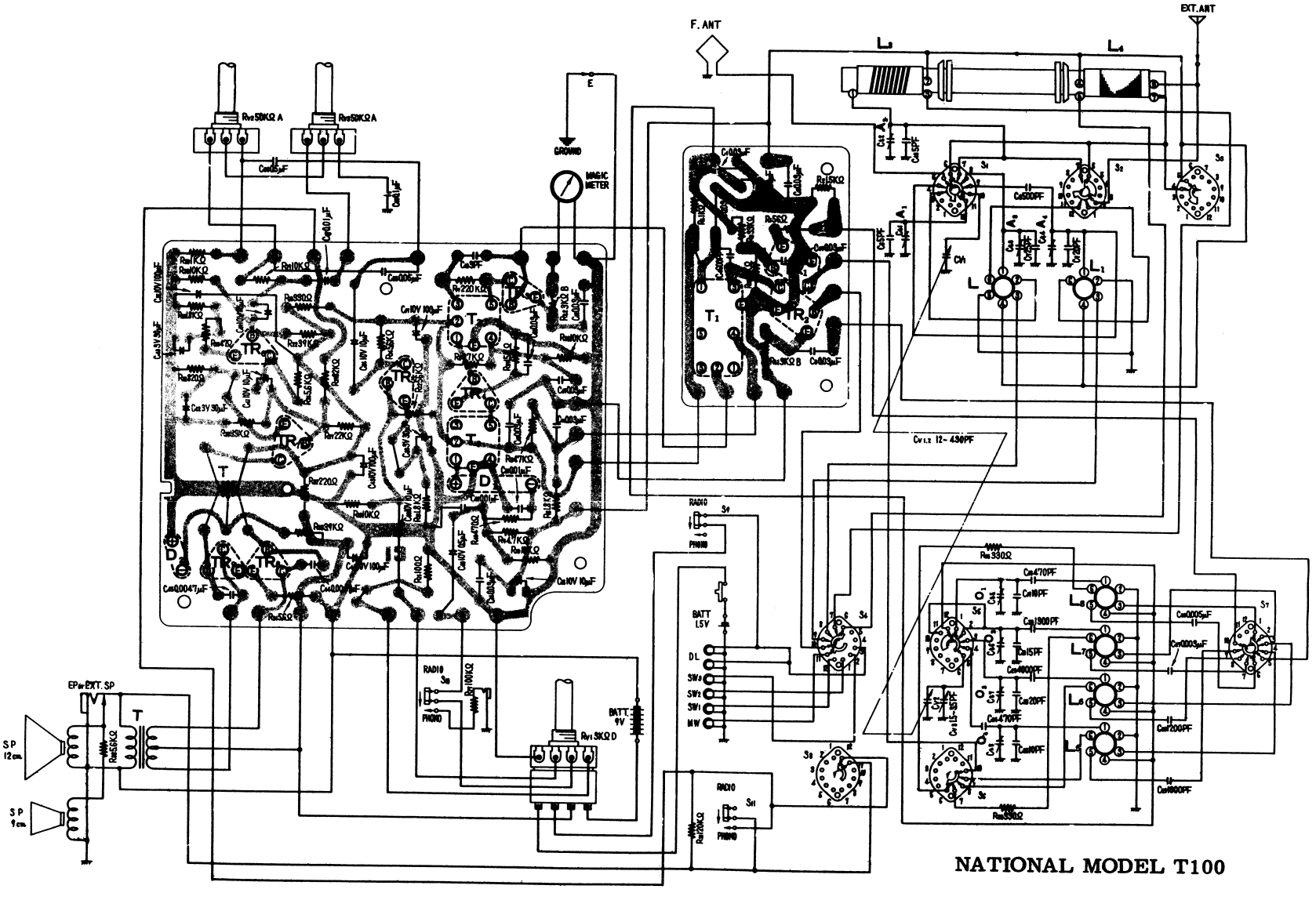

NATIONAL MODEL T100

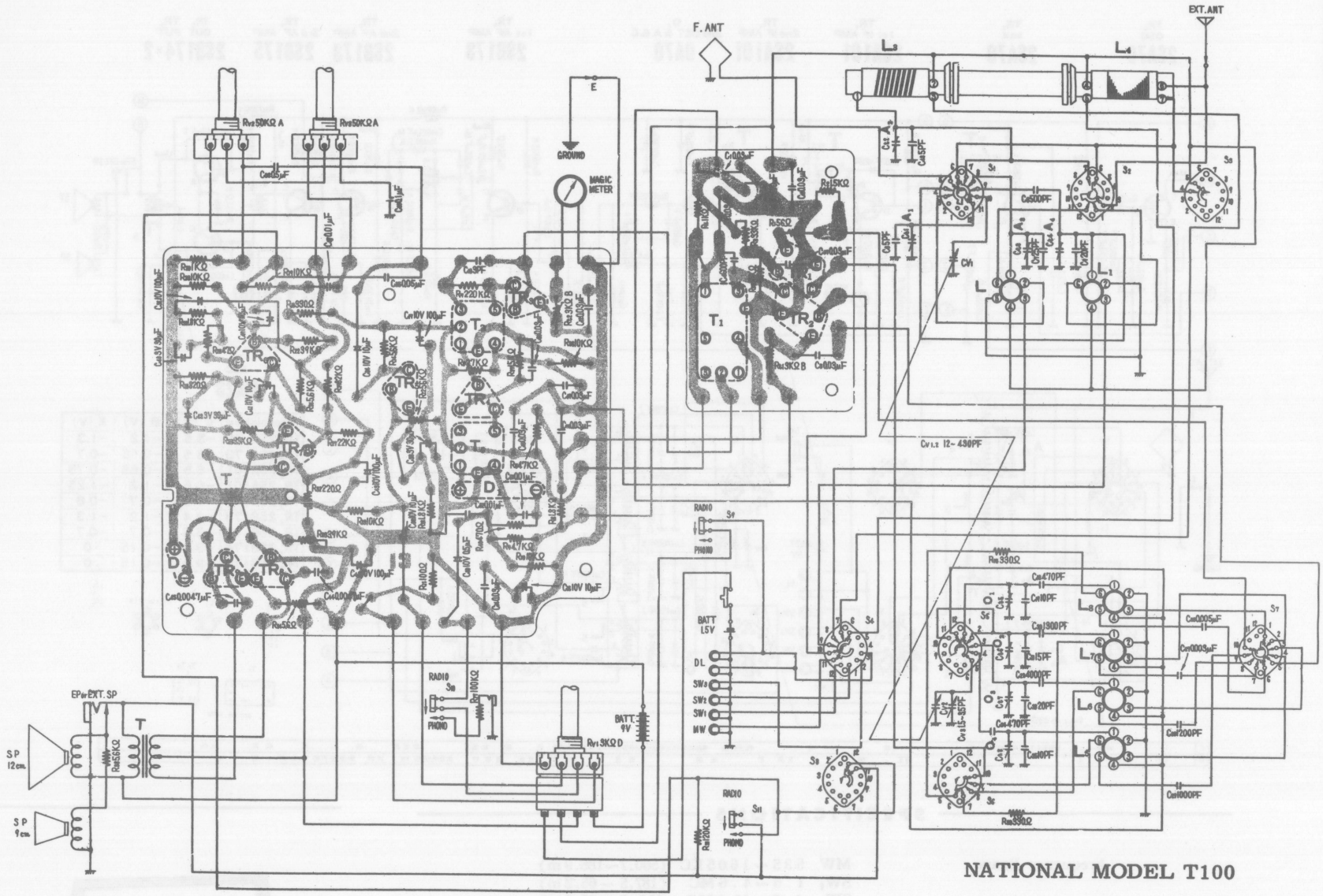

NATIONAL MODEL T100

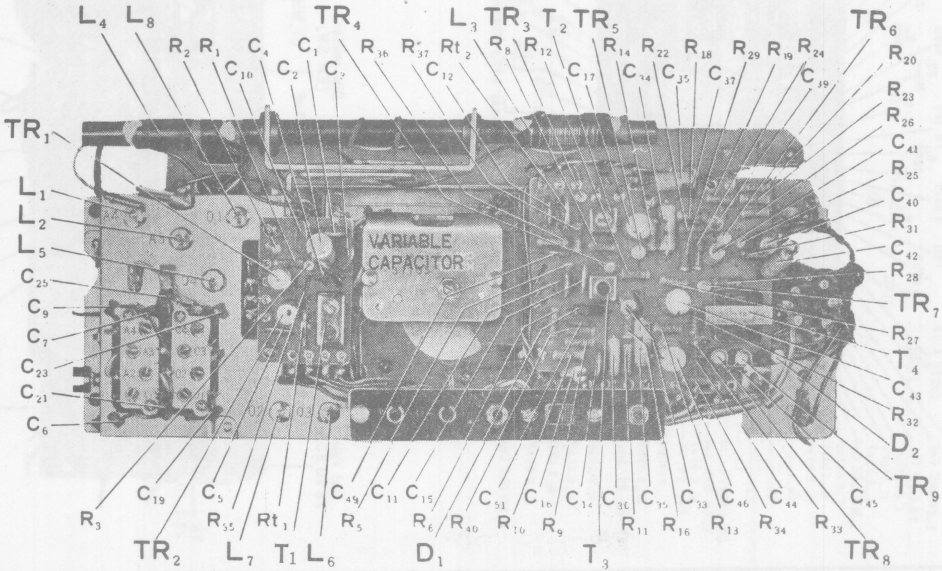
L4
L8
R2
R1
C4
C10
C1
C2
TR4
R36
R37
Rt2
C12
L3
TR3
T2
TR5
R8
R12
C17
R14
R22
C34
C35
R18
C37
R29
R19
R24
C19
TR6
R20
R23
R26
C41
R25
C40
R31
C42
R28
TR7
R27
T4
C43
R32
D2
TR9
C45
TR8
TR1
L1
L2
L5
C25
C9
C7
C23
C21
C6
R3
C19
C5
R55
Rt1
TR2
L7
T1
L6
C49
C11
C15
R5
R6
D1
R40
C51
R10
C16
R9
C14
T3
C36
R11
C35
R16
C33
R13
C46
R34
C44
R33
VARIABLE
CAPACITOR

N52