TECHNICAL MANUAL

OPERATOR'S, ORGANIZATIONAL, DIRECT SUPPORT, AND GENERAL SUPPORT MAINTENANCE MANUAL INCLUDING REPAIR PARTS AND SPECIAL TOOLS LISTS

SPECTRUM ANALYZER PL-1391/U

(TEKTRONIX MODEL 7L5)

(NSN 6625-01-015-6587)

HEADQUARTERS, DEPARTMENT OF THE ARMY

DECEMBER 1978

WARNING

DANGEROUS VOLTAGES

exist in this equipment. Be extremely careful when working on the power supply circuit or the AC line connections during line power operation. Serious injury or DEATH may result from contact with these points.

DON’T TAKE CHANCES!

TECHNICAL MANUAL HEADQUARTERS
DEPARTMENT OF THE ARMY
NO. 11-6625-2759-14 & P WASHINGTON, DC, *6December 1978*

OPERATOR'S, ORGANIZATIONAL, DIRECT SUPPORT,

AND GENERAL SUPPORT MAINTENANCE MANUAL

INCLUDING REPAIR PARTS AND SPECIAL TOOLS LISTS
SPECTRUM ANALYZER PL-1391/U

(TEKTRONIX MODEL 7L5)

(NSN 6625-01-015-6587)

REPORTING OF ERRORS

You can improve this manual by recommending improvements using DA Form 2028-2 located in the back of the manual. Simply tear out the self- addressed form, fill it out as shown on the sample, fold it where shown, and drop it in the mail.

If there are no blank DA Forms 2028-2 in the back of the manual, use the standard DA Form 2028 (Recommended Changes to Publications and Blank Forms) and forward to the Commander, US Army Communications and Electronics Materiel Readiness Command, ATTN: DRSEL-ME-MQ, Fort Monmouth, NJ 07703.
In either case a reply will be furnished direct to you.

NOTE

This manual is an authentication of the manufacturer's commercial literature which, through usage, has been found to cover the data required to operate and maintain this equipment. Since the manual was not prepared in accordance with military specifications and AR 310-3, the format has not been structured to consider levels of maintenance.

TABLE OF CONTENTS

SECTION 0
INTRODUCTION

0-1. SCOPE

This manual describes Spectrum Analyzer PL-1391/U and provides instructions for operation (Part I) and maintenance (Part II). Throughout this manual the PL-1391/U is referred to as the Tekronix Model 7L5.

0-2. INDEXES OF PUBLICATIONS

a. DA Pam 310-4. Refer to the latest issue of DA Pam 310-4 to determine whether there are new editions, changes, or additional publications pertaining to the equipment.

b. DA Pam 310-7. Refer to the DA Pam 310-7 to determine whether there are modification work orders (MWO's) pertaining to the equipment.

0-3. FORMS AND RECORDS

a. Reports of Maintenance and Unsatisfactory Equipment. Maintenance forms, records, and reports which are to be used by maintenance personnel at all maintenance levels are listed in and prescribed by TM 38-750.

b. Report of Packaging and Handling Deficiencies. Fill out and forward DD Form 6 (Packaging Improvement Report) as prescribed in AR 700-58/NAVSUPINST 4030.29/AFR 71-13Imco P4030.29A and DLAR 4145.8.

c. Discrepancy in Shipment Report (DISREP) (SF 361). Fill out and forward Discrepancy in Shipment Report (DISREP) (SF 361) as prescribed in AR 55-38/NAVSUPINST 4610.33B/AFR 75-18/MCO P4610.19C and DLAR 4500.15.

0-4. REPORTING EQUIPMENT IMPROVEMENT RECOMMENDATIONS (EIR)

EIR's will be prepared using SF Form 368, Quality Deficiency Report. Instructions for preparing EIR's are provided in TM 38-750, The Army Maintenance Management System. EIR's should be mailed direct to Commander, US Army Communications and Electronics Materiel Readiness Command, ATTN: DRSEL-ME-MQ, Fort Monmouth, NJ 07703. A reply will be furnished direct to you.

0-5. ADMINISTRATIVE STORAGE

For information concerning storage, refer to section 2.

0-6. DESTRUCTION OF ARMY ELECTRONICS MATERIEL

Destruction of Army electronics materiel to prevent enemy use shall be in accordance with TM 750-244-2.

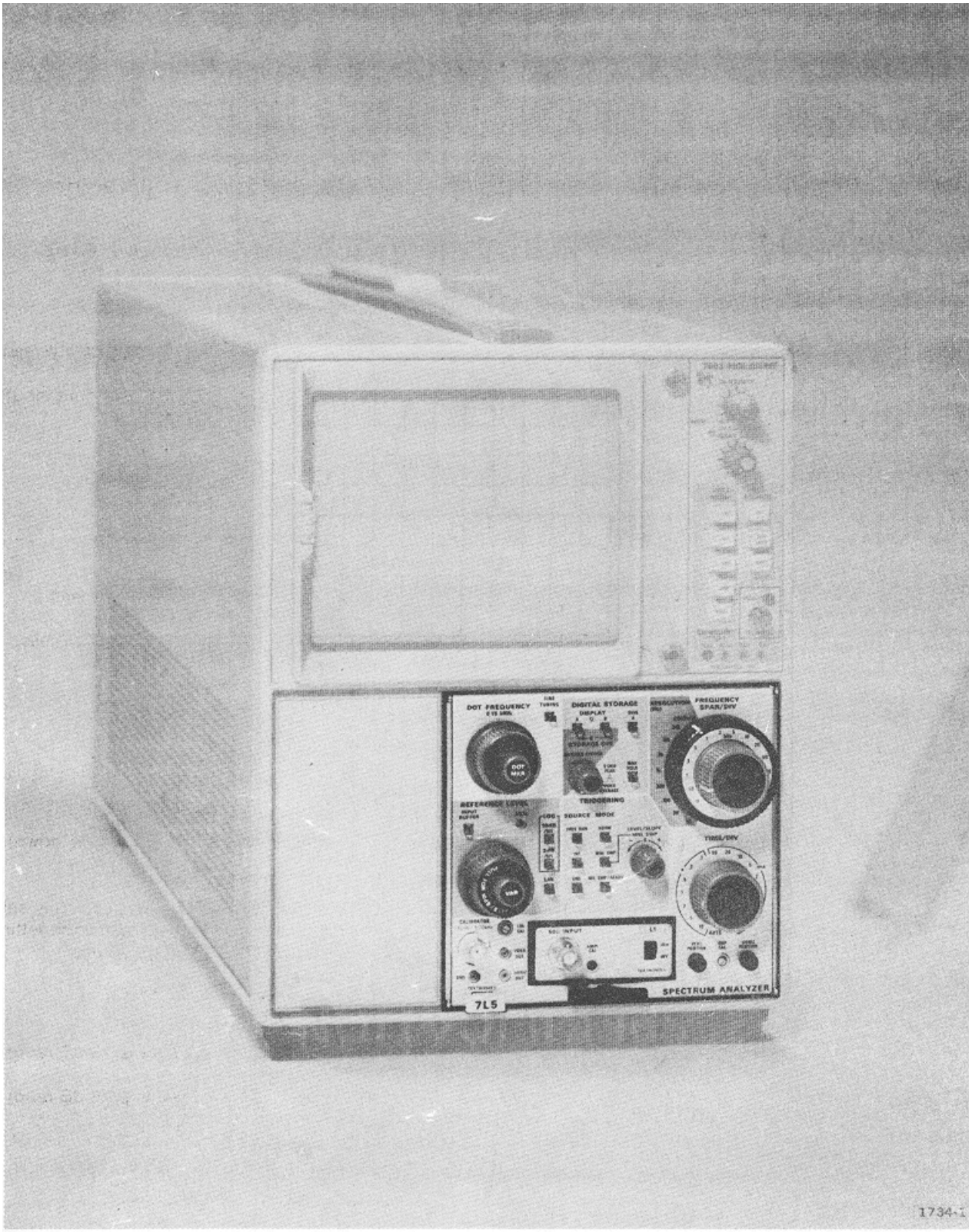

Fig. 1-1. 7L5 Spectrum Analyzer.

SECTION 1. SPECIFICATION

Introduction

To effectively use the 7L5 Spectrum Analyzer, the operation and capabilities of the instrument must be known This instruction manual covers general operating information about the instrument. Service information, such as circuit description and calibration are contained in the Service manual.

Description

The 7L5 is a 5 MHz spectrum analyzer with digital storage. Frequency stability is within 5 Hz/hr and center frequency (dot) can be read with six digit accuracy immediately after turn-on. There is no need to fine tune the display Complex measurements and analysis can be made with relative ease. Built-in micro-processing circuits decode control settings, process frequency and reference level information, and optimize sweep time and resolution for the selected frequency span.

The 7L5 with 80 dB or more of spurious free dynamic range, provides the ability to measure wide relative amplitudes. Nanovolt sensitivity provides very low-level signal and noise measurements.

The 7L5 display is fully calibrated in dBm, dBV, or volts/div The reference level can be accurately set to 1 dB increments. A front panel input buffer control increases front-end immunity to intermodulation distortion while maintaining a constant reference level. To accommodate a wide variety of impedance sources, the 7L5 uses quick disconnect plug-in input impedance modules of 50 Ω, 75 Ω, 600 Ω, 1 MΩ/28 pF and customized units to meet special requirements.

Digital storage allows any 7000-Series mainframe, with crt readout, to present clean, easy to photograph, displays. A smooth integrated display provides an accurate analysis of most displays. Two complete displays can be held in memory for comparison Two modes select either the conventional peak display or a digitally averaged display.

ELECTRICAL CHARACTERISTICS

The following electrical characteristics apply when the 7L5 Spectrum Analyzer, in combination with a Plug-In Module, are normally installed in a 7000-Series oscilloscope and after a warm-up of ten minutes or more.

Frequency Characteristics

Range

Input Frequency: 10 Hz through 5 0 MHz.

Dot Frequency: 0 Hz through 4999.75 kHz.

Accuracy

20 °C to 30°C: +(5 Hz + 2 x 10^{-6} of dot readout).

0°C to 50°C: ±(20 Hz + 10^{-5} of dot readout).

Drift

5 Hz/hour or less.

Residual (Incidental) FM

50 Hz/div to 2 kHz/div: 1 Hz (p-p) or less.

5 kHz/div to 500 kHz/div. 40 Hz (p-p) or less.

Resolution Bandwidth

Accuracy

30 kHz--30 Hz: Within 20% of selected resolution (6 dB down).

10 Hz: Within 100 Hz ±20 Hz (70 dB down).

The COUPLED setting electronically selects the best resolution bandwidth for each setting of the FREQUENCY SPAN/DIV control.

Shape Factor

30 kHz-3 kHz 5:1 or better (60:6 dB ratio).

1 kHz-10 Hz: 10:1 or better (60:6 dB ratio).

Amplitude Deviation

30 kHz-100 Hz: 0.5 dB or less.

30 kHz-10 Hz: 2.0 dB or less.

Input Characteristics

CAUTION

The application of a dc voltage to the INPUT of the L1 or L2 Plug-In Modules may cause permanent damage to the mixer circuit.

Input Impedance (Nominal):

L1 50Ω
L2 75Ω
L3 Selectable (50Ω, 600Ω, and 1 MΩ/28 pF).

Input Power (maximum Input level for reference levels of 0 dBm or greater):

L1 21 dBm or 2.5 V rms
L2 21 dBm or 3.07 V rms
L3 21 dBm-input terminated 50Ω or 600Ω; 100 V (peak ac + dc) Input 1 MΩ/28 pF.

Input Power (maximum input level for reference levels below 0 dBm):

L1 +10 dBm
L2 +10 dBm
L3 +10 dBm--input terminated 50Ω or 600Ω, and 100 V (peak ac + dc) with input of 1 MΩ3/28 pF.

Amplitude Characteristics

NOTE

If digital storage is used, an additional quantization error of 0.5% of full screen should be added to the amplitude characteristics.

Residual Response

Internally generated spurious signals are -130 dBm or less referred to the input (harmonics of the calibrator are -125 dB) with L1 or L2 plug-in module and -143 dBV with the L3 plug-in module.

Sensitivity

The following tabulation of equivalent input noise for each resolution bandwidth is measured with; the INPUT BUFFER off, the VIDEO PEAK/AVG at max cw, and the TIME/DIV set to 10 seconds.

Resolution Bandwidth	Equivalent Input Noise (equal to or better than)		
	L1	L2	L3
10 Hz	-135 dBm	-135 dBm	-148 dBV
30 Hz	-133 dBm	-133 dBm	-146 dBV
100 Hz	-130 dBm	-130 dBm	-143 dBV
300 Hz	-125 dBm	-125 dBm	-138 dBV
1 kHz	-120 dBm	-120 dBm	-133 dBV
3 kHz	-115 dBm	-115 dBm	-128 dBV
10 kHz	-110 dBm	-110 dBm	-123 dBV
30 kHz	-105 dBm	-105 dBm	-118 dBV

NOTE

Sensitivity is degraded an additional 8 dB when the INPUT BUFFER is on; e.g., at 3 kHz, the equivalent input noise would be -107 dBm instead of -115 dBm. Noise level will increase by approximately 10 dB when operation Is In video peak mode,.

Intermodulation Distortion

Intermodulation products from two on-screen signals, within any frequency span are >75 dB down for third order products and at least 72 dB down for second order products.

Second and third order intermodulation products from two on-screen -53 dBV or less signals within any frequency span are at least 80 dB down.

With the INPUT BUFFER switch on, the second and third order intermodulation products, for any two onscreen signals, within any frequency span, are at least 80 dB down.

Display Flatness

Peak to peak deviation, over any selected frequency span: Quantization error must be added (see Note under Amplitude Characteristics) if digital storage is used.

L1 0.5 dB;
L2 0.5 dB;
L3 0.5 dB

Reference Level

Refers to top graticule line in Log mode. Calibrated in 1 dB and 10 dB steps for the L1 and L2 modules and 1 dB/2 dB and 10 dB for L3 plug-in module.

Range	L1	L2	L3
Log 2 dB/Div	-128 dBm to +21 dBm	-128 dBm/ 139 dBV to +21 dBm/ +10 dBV	-128 dBm to +21 dBm (50Ω),
			-139 dBm to +10dBm (600Ω),
			-141 dBV to +8 dBV (Hi Z)
Log	-70 dBm 10 dB/Div to +21 dBm	-70 dBm/ -81 dBV to +21 dBm/ +10 dBV	-70 dBm to +21 dBm (50Ω),
			-81 dBm to +10 dBm (600 Ω),
			-83 dBV to +8 dBV (Hi Z)

Incremental Accuracy

When calibrated at -40 dBV in Log mode.

L1, L2 and L3: Within 0.2 dB/dB with cumulative error of 0.25 dB/10 dB.

Lin Mode Range: 20 nV/Div to 200 mV/Div within 5% in 1-2-5 sequence.

NOTE

A >sign is displayed adjacent to the reference level readout when the reference level is not calibrated due to an incompatible selection of controls.

Display Dynamic Range/Accuracy

Log 10 dB/DIV Mode: Dynamic window is 80 dB. Accuracy is within 0.05 dB/dB to 2 dB maximum.

Log 2 dB/DIV Mode: Dynamic window is 16 dB. Accuracy is within 0.1 dB/dB to 1 d,B maximum.

Sweep Characteristics

Frequency Span

Provides calibrated frequency spans from 50 Hz/div to max (500 kHz/div), within 4%, in 1-2-5 sequence.

Horizontal linearity is within 4% over the entire 10 div display.

A 0-Hz/Div position is provided for time domain operation.

Sweep Rate

Time per div is selectable from 10 s/Div to 0.1 ms/Div in 1-2-5 sequence. An AUTO position permits automatic selection of optimum time/div for the selected resolution and span/div settings.

Sweep rate accuracy is within 5% of the rate selected.

Triggering

Provides two triggering sources, INT (internal) and LINE, in addition to a FREE-RUN position.

When INT is selected, ac coupled signal components from the mainframe Trigger Source (left or right vertical amplifiers) are used.

When LINE is selected, ac coupled sample of mainframe line voltage is used.

Three triggering modes are; NORM (normal), SGL SWP/READY (single sweep), and MNL SWEEP (manual sweep).

Trigger level is >1.0 div of internal signal for both NORM and SGL SWP modes over the approximate frequency range of 30 Hz to 500 kHz.

Output Connectors

Video Out

Front-panel pin jack connector supplies the video (vertical) output signal at an amplitude of 50 mV/div +5% (about the crt vertical center) with source impedance of 1 kΩ.

Horiz Out

A front-panel pin jack connectorsupplies horizontal output signal (negative-going sawtooth that varies from 0.0 V dc to approximately -6 V dc with a source impedance of 5 kΩ.

Calibrator

Front panel BNC connector supplies a calibrated 500 kHz squarewave output signal (derived from the analyzer's time base). Output amplitude is within +0.15 dB of -40 dBV into impedance of the plug-in module.

ENVIRONMENTAL CHARACTERISTICS

The 7L5 Spectrum Analyzer will meet the foregoing electrical characteristics within the environmental limits of a 7000-Series oscilloscope. Complete details on environmental test procedures including failure criteria etc., can be obtained from a local Tektronix Field Office or representative.

PHYSICAL CHARACTERISTICS

Net weight (instrument only), 8 pounds, 12 ounces.

ACCESSORIES AND OPTIONS

Standard Accessories	**Tektronix Part No.**
Graticule, Spectrum Analyzer	377-1159-02 (7000-Series)
Filter, light amber	378-0684-00
Manual, Operating	070-1734-00
Manual, Service	070-2184-00

Optional Accessories

Plug-in Module, 50 ohm	L1
Plug-in Module, 75 ohm	L2
Plug-in Module 50 Ω 600Ω & 1 MΩ/28 pF	L3
Probe (10X)	P6105 (see L3 Manual)
Attenuator, step. 50 ohm	2701
Attenuator, step, 75 ohm	2703

OPTIONS

7L5 Option 21 -(Log Display)
7L5 Option 25--(Tracking Generator)
7L5 Option 28--(Readout)
7L5 Option 30-(Option 21/25)
7L5 Option 31 -(Option 21/28)
7L5 Option 32-(Option 25/28)
7L5 Option 33--(Options 21/25/28)

SECTION 2. INSTALLATION

Initial Inspection

This instrument was inspected both mechanically and electrically before shipment. It should be free of mars or scratches and electrically meet or exceed all specifications. Inspect the instrument for physical damage and check the electrical performance by the Operational Check procedure provided within these instructions. This procedure will verify that the instrument is operating correctly and it will satisfy most receiving or incoming inspection requirements. If all instrument specifications are to be verified, refer to the Service Instructions for the 7L5.

If there is physical damage or performance deficiency, contact your local Tektronix Field Office or representative

Installation

To install the 7L5, align the upper and lower guide rails with those in the receiving compartments of the mainframe. Slide the instrument along the rails into the mainframe When the electrical connectors at the rear of the 7L5 make contact, apply firm, steady pressure to the front panel until the rear connectors are engaged and the front panel is approximately flush with the oscilloscope front panel. To remove the 7L5, pull the release latch labeled 7L5, at the lower left of the front panel, and remove the instrument.

REPACKAGING FOR SHIPMENT

If your Tektronix instrument is to be shipped to a Tektronix Service Center for service or replacement, attach a tag showing; owner (with address) and the name of an individual, at your firm, that can be contacted. Include complete instrument serial number and description of the service required.

Save and re-use the container your instrument was shipped in. If the original packaging is not available or is unfit for use, repackage as follows:

1. Obtain a shipping container of heavy corrugated cardboard or wood with inside dimensions six inches or greater than the instrument dimensions. This will allow room for cushioning. Refer to Table 2-1 for carton test strength requirements.

2. Wrap the instrument in heavy paper or polyethylene sheeting to protect the instrument finish. Protect the front panel with urethane foam or cardboard strips.

3 Cushion the instrument on all sides by packing dunnage or urethane foam between the carton and the instrument, allowing three inches on all sides.

4. Seal the shipping carton with shipping tape or an industrial stapler.

TABLE 2-1

Gross Weight (lb)	Carton Test Strength (lb)
0-10	200
10-30	275
30-120	375
120-140	500
140-160	600

If you have any questions, contact your local Tektronix Field Office or representative.

SECTION 3. OPERATING INSTRUCTIONS

Introduction

This section contains; a simplified block diagram description, function of the front panel controls and connectors, an operational check-out and familiarization procedure, and a section devoted to the use and application of the instrument. Service information is contained in the Service Instruction manual.

FUNCTIONAL BLOCK DESCRIPTION

Functional Block Description

The 7L5 is a swept front end spectrum analyzer with selectable front-end plug-in modules that permit the user to obtain calibrated display for a number of different Impedances (i.e., 50 ohm, 600 ohm, etc.). The plug-in module contains; selectable attenuation, the first mixer, and an Input buffer selector that trades attenuation for IF gain. Signal attenuation in the plug-in and gain of the IF processing chain are controlled by a reference level logic circuit in the 7L5 which provides calibrated settings in 1 dB or 10 dB steps over a range of approximately 146 dB (depending on the plug-in module). A simplified block diagram is shown in Fig. 3-1.

The input signal to the 7L5 is mixed with the frequency of the main oscillator and the IF of 10.7 MHz is fed to and amplified by the 10.7 MHz IF amplifier. Since the 7L5 input frequency range is O to 5 MHz, the main oscillator is tuned and swept from 10.7 to 15.7 MHz. The frequency of the main oscillator is controlled by two secondary (A and B) oscillators that use a synthesizer technique to tune and phase lock their frequencies. The sweep frequency control circuit drives the oscillators according to the settings of front panel DOT FREQUENCY and FREQUENCY SPAN/DIV controls.

The 10 7 MHz IF is processed through bandpass filters and amplifiers and then mixed with the output from a 10.450 oscillator, to down-convert the 10.7 MHz to an IF of 250 kHz Gain of the 250 kHz amplifier is controlled by the reference level logic circuit which establishes the amount of attenuation in the plug-in module and gain for the 250 kHz IF and Log amplifiers. The reference level is selectable in 1 dB and 10 dB steps.

The 250 kHz IF signal is processed through the variable resolution filter circuits for bandwidth selections of 10 Hz to 30 kHz. The signal is again amplified, detected, and the video is sent through amplifier circuits that provide the 10 dB/dlv, 2 dB/dlv, and linear gain characteristics.

The video signal is then fed to the display processing circuits where the signal is either stored and displayed, or, if the storage mode is not selected, the signal is passed directly through the vertical output amplifier to the mainframe circuit. If either or both the DISPLAY A or DISPLAY B latches are enabled, the signal is converted to digital data, stored in A or B memory, then converted back to analog data and processed through the output amplifiers to the mainframe The vertical information is digitized and stored at 512 horizontal address locations across the screen. Therefore, the horizontal sweep information is converted to digital data for storage, then converted back to an analog signal for display The horizontal sweep ramp is processed the same as the vertical signal. The vertical (video) information can be averaged or peak detected.

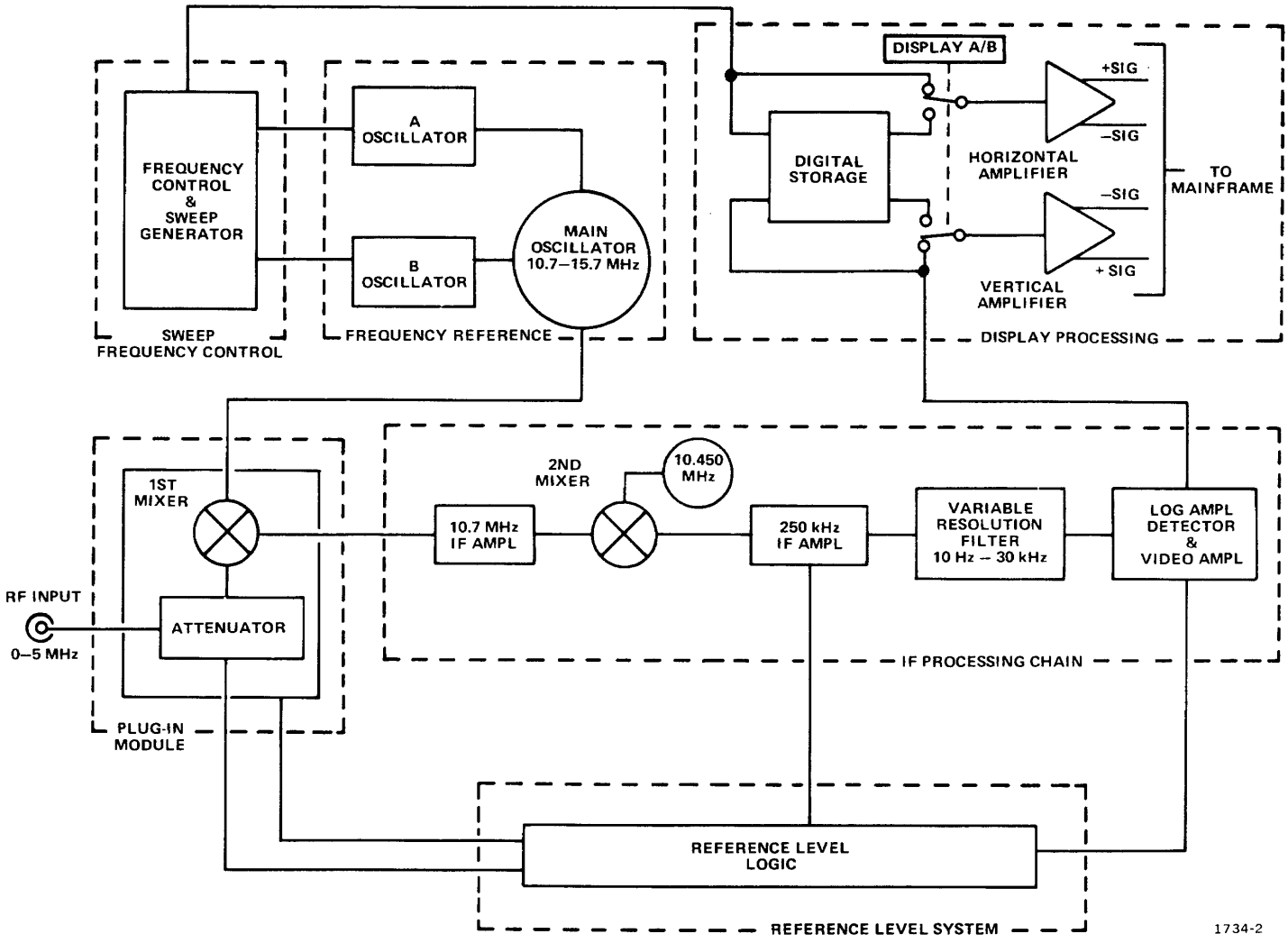

Fig. 3-1. Functional block diagram.

FRONT PANEL CONTROLS AND CONNECTORS

Pushing any front panel pushbutton switch activates a bistable electronic circuit to change its output state. When in the active state, the plastic pushbutton is illuminated. Pressing the pushbutton a second time changes the output of the circuit to the inactive state and extinguishes the illuminated button.

Front panel controls also include two special photo-optic switch assemblies, the FREQUENCY SPAN/'DIV-RESOLUTION switch and the TIME/DIV switch. Designed especially for the 7L5, each assembly is a mechanical/photo-electric, digital switch, that provides a TTL compatible five-bit binary output. The reliability of these switches has been demonstrated and with normal use they should last the life of the instrument. Dismantling or field repair of these switches is discouraged since their proper operation requires precision alignment of their internal components. If either switch assembly is damaged or suspected of malfunction, it should be replaced as an assembly.

The following describes the function of the front panel selectors for the 7L5. A layout of the front panel is shown in Fig. 3-2.

DOT FREQUENCY — Changes the dot (marker) frequency in coarse (10 kHz) or fine (250 Hz) steps over the input frequency range of 0 Hz to 5 MHz. The frequency of the dot marker is displayed on the crt readout in the upper right set of characters. Dot frequency will not extend beyond the 7L5 frequency range, even if the control is rotated. When power is applied, dot frequency starts at 0.000.

FINE TUNING — Selects coarse or fine incrementation for the DOT FREQUENCY control. When the FINE TUNING switch is activated (illuminated), each rotational click of the DOT FREQUENCY control changes the dot frequency in increments of 250 Hz. When the FINE TUNING switch is inactive (extinguished), each rotational click of the DOT FREQUENCY control changes the dot frequency in increments of 10 kHz.

DOT MKR — Used to horizontally position the frequency dot. The displayed frequency readout characters enumerate the actual frequency of the dot. When the DOT MKR control is in its detent position (fully ccw), the frequency dot and the selected frequency are on the vertical center line of the graticule. The 7L5 can be operated in a start sweep mode when the frequency dot is positioned to the left vertical graticule line. The DOT MKR control is disabled when the FREQUENCY SPAN/DIV switch is at MAX.

REFERENCE LEVEL — Sets the full screen signal amplitude level (dBm, dBV) required at the INPUT to the plug-in module. This level is relevant to the input impedance of the plug-in module. Reference level is associated to the top graticule line of the display area and signal level is relative to this reference. The reference level range depends on the plug-in module, however, in the 2 dB/Div mode it covers 149 dB, in the 10 dB/Div mode the range is 90 dB and in the Lin mode 20 nV/div to 200 mV/div. The control has two speeds or stepping increments; pulled out, each increment is 10 dB, pushed in each increment is 1 dB or in some cases (dependent on the plug-in module) 2 dB.

VAR — The VAR (variable) control provides 8 dB or more gain adjustment between each calibrated reference level step. A<symbol is displayed on the crt, preceding the reference level readout, whenever the reference level is not calibrated (VAR is not in its detent position).

INPUT BUFFER — The active (illuminated) state of this pushbutton switch inserts 8 dB of signal attenuation at the input of the first mixer and adds 8 dB of vertical gain (after the variable resolution filters). When used, it reduces intermodulation distortion caused by excessive input signal amplitude. Because of its increased gain, the noise figure is increased 8 dB when this switch is activated.

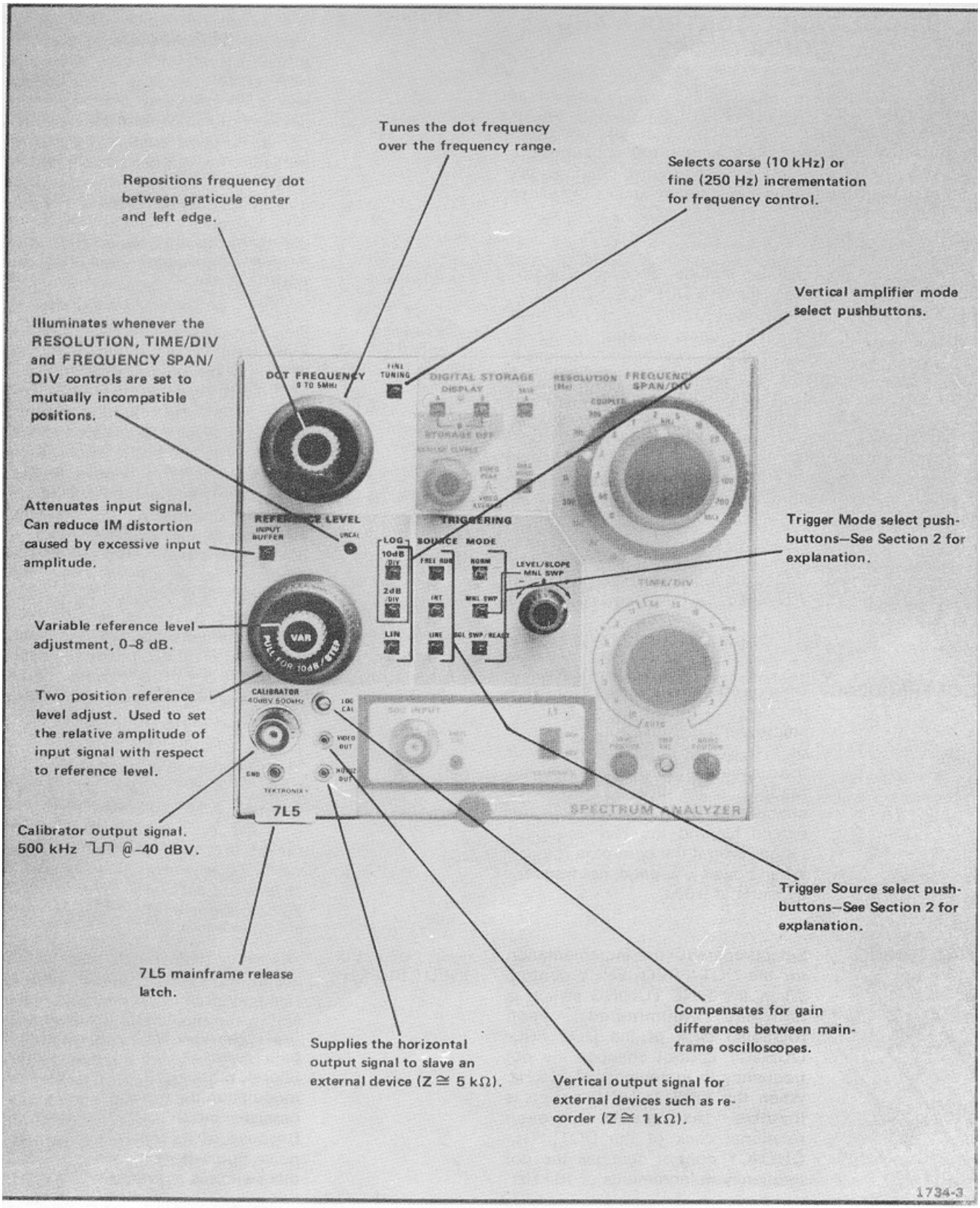

Fig. 3-2.A. 7L5 front panel controls and connectors.

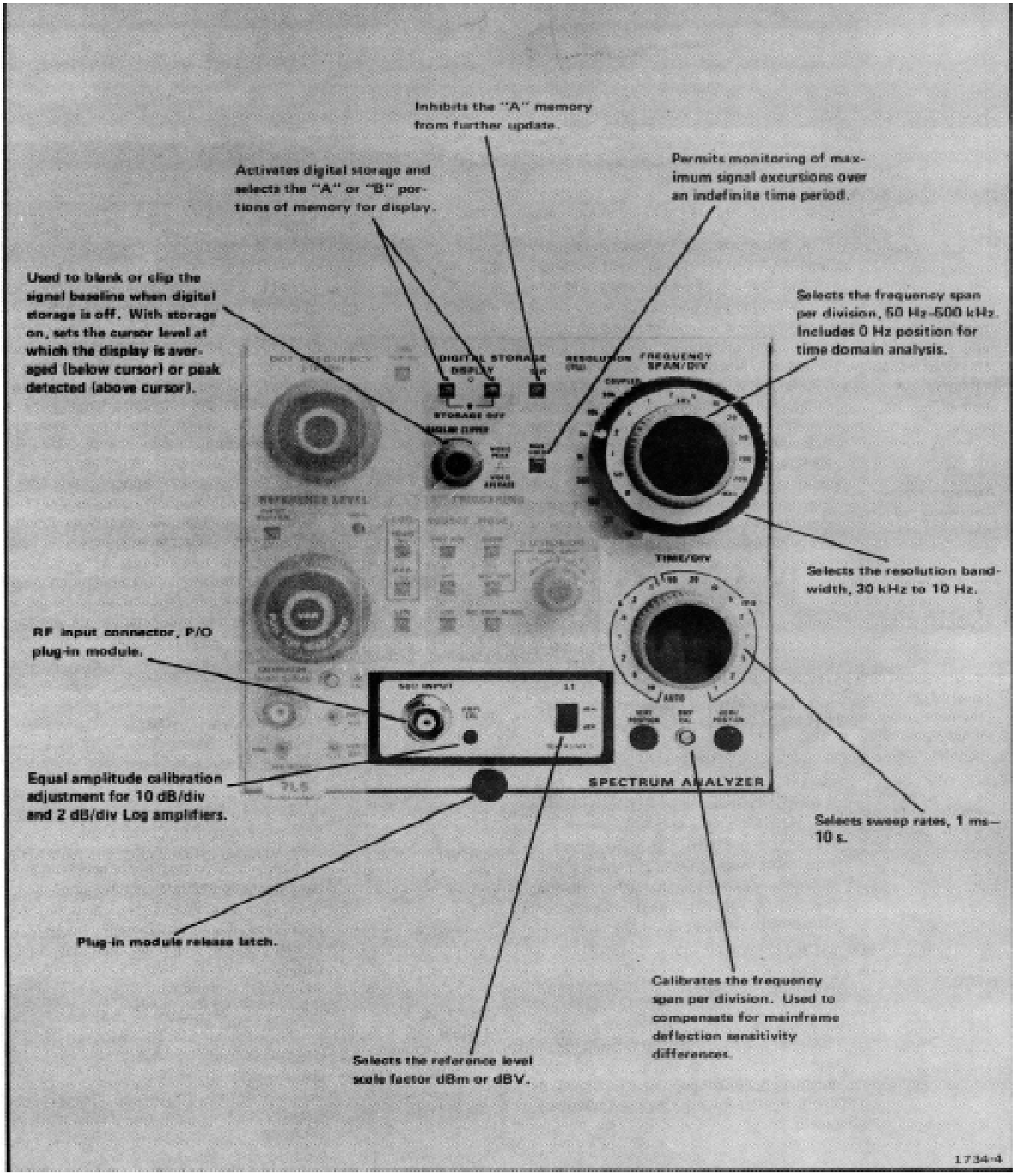

Fig. 3-2B. 7LS-L1 plug-in front panel control and connectors.

LOG 10 dB/DIV — The illuminated condition of this pushbutton selects a logarithmic display of 10 dB/div with a dynamic range of 80 dB.

LOG 2 dB/DIV — The illuminated condition of this pushbutton selects a logarithmic display of 2 dB/div with a dynamic range of 16 dB

LIN — The illuminated condition of this pushbutton selects a linear display. Signal amplitude is a linear function of input level.

FREQUENCY SPAN/DIV — Selects frequency spans from 50 Hz/div to 500 kHz/div (MAX position). A 0 Hz position provides time domain display with a bandpass dependent on the setting of the RESOLUTION selector. In the 0 Hz position the frequency dot is not displayed and when in the MAX position the frequency dot position is controlled by the DOT FREQUENCY control.

RESOLUTION — Selects resolution bandwidths of 10 Hz to 30 kHz in a 1-3 sequence. A COUPLED position electronically selects the best compatible resolution bandwidth setting for the FREQUENCY SPAN/DIV selection.

TIME/DIV — Selects the analyzer's sweep rate. Sweep rates are 10 s/div to 0.1 ms/div in a 5-2-1 sequence. An AUTO position electronically programs sweep rate so the display remains calibrated for the selected frequency span and resolution bandwidth settings.

UNCAL — When the display is uncalibrated because the FREQUENCY SPAN/DIV, RESOLUTION, and TIME/DIV switch settings are incompatible, this indicator lights and a > symbol is displayed on the crt as a prefix to the reference level readout characters.

TRIGGERING — Two trigger sources (Line and Internal) plus a Free Run mode can be selected. In the Free Run mode (FREE RUN button activated) the sweep free runs and will not sync with any trigger signal. When the LINE pushbutton is activated (illuminated) the sweep is triggered by the line voltage to the mainframe. The INT pushbutton selects ac coupled signal components from the mainframe Trigger Source (left or right vertical).

Three trigger modes are provided: NORM (normal), SGL SWP/READY (single sweep/ready) and MNL SWEEP (manually controlled sweep). When the NORM button is activated, the sweep is triggered from the source selected; or, if the trigger is not present, the sweep automatically runs in about 10-second intervals to provide a baseline display. When the SGL SWP/READY button is activated, the, sweep runs with the next trigger or in about 10 seconds if trigger is not present. In time domain operation (FREQ SPAN/DIV at 0 Hz) pushing the button activates the sweep ready state. The button lights to indicate the trigger circuit is armed and ready. The sweep will run with the arrival of a trigger. The button remains illuminated until the sweep has completed its run. This provides a ready indication of the sweep state when photographing a display.

LEVEL/SLOPE-MNL SWP — A dual function control. As a level slope/control, it adjusts the level of the trigger threshold on either a positive or negative slope. As a manual sweep control, it positions the crt beam anywhere along the X- axis. Maximum ccw corresponds to a beam location at the left graticule edge.

DIGITAL STORAGE — SAVE A: Activating the SAVE A pushbutton dedicates one half of the digital storage memory to preserve the binary equivalent of the existing waveform amplitude at 256 X-axis locations. The A memory is inhibited from further update until SAVE A is deactivated (extinguished).

DISPLAY A/B: When DISPLAY A or DISPLAY B is selected, the corresponding pushbutton switch is illuminated and the contents of memory A or memory B is displayed. With SAVE A off, all memory locations are displayed contiguously. With SAVE A on, DISPLAY A and DISPLAY B are selected. The con- tents of both memories are interlaced and displayed.

PEAK AVERAGE/BASELINE CLIPPER: A dual function control. When digital storage is off, this control operates as a conventional baseline clipper, i.e., as the control is rotated ccw, more of the vertical display is progressively blanked or clipped over the last 1/3 turn of the control. When digital storage is on, the PEAK AVERAGE control sets the level at which the vertical display is either peak detected or digitally averaged. Video signals above the level set by the PEAK AVERAGE control (and denoted by a horizontal cursor) are peak detected and stored. Video signals below the level set by the PEAK AVERAGE control are digitally averaged and stored.

MAX HOLD: Enables the digital storage memory to store the maximum signal levels within the period the circuit is active (button illuminated). This maximum signal can then be saved and compared with future signals for drift or amplitude variations.

SWP CAL — Adjusted during the operational check to calibrate the sweep. This adjustment compensates for differences in deflection sensitivity between mainframe oscilloscopes. The SWP CAL control should be adjusted or checked for proper setting each time the 7L5 is installed in an oscilloscope.

LOG CAL — Adjusted during the operational check to calibrate the 2 dB/div and the 10 dB/div displays. This adjustment is used to compensate for differences in vertical gain between mainframe oscilloscopes. The LOG CAL control should be adjusted or checked for proper setting each time the 7L5 is installed in an oscilloscope.

AMPL CAL (L1 Plug-In Module) — The AMPL CAL control is adjusted during the initial calibration to calibrate the full screen reference level. This control is used to compensate for gain differences in the RF and IF portions of the instrument. The AMPL CAL control should be adjusted or checked for proper setting each time a plug-in module is installed in the 7L5.

HORIZ POS — Positions the display or baseline on the crt X-axis.

VERT POS — Positions the display or baseline on the crt Y-axis.

dBm/dBV — Located on the plug-in module front panel, the dBm/dBV control selects the reference level scale factor; decibels with respect to one milliwatt or decibels with respect to one volt.

Calibrating the 7L5 to the Oscilloscope Mainframe

1. Install or verify the presence of a plug-in module (see Optional Accessories, Section 1)

2. Select oscilloscope Vertical Mode, Horizontal Mode and Trigger Source (Right or Left) corresponding with plug-in compartments occupied by the spectrum analyzer. Turn on the mainframe power and allow a 10 minute warm-up period.

3. Set the front panel controls as follows:

DOT MKR	max ccw (detent position)
FREQUENCY	
SPAN/DIV	MAX (500 kHz)
RESOLUTION	COUPLED
VAR	max ccw (detent position)
BASELINE	
CLIPPER	max cw
LOG 10 dB/DIV	on
REFERENCE LEVEL	-40 dBV
INPUT BUFFER	off
FREE RUN	on
NORM	on
SAVE A	off
MAX HOLD	off
dBm/dBV	dBV (plug-in module switch)
TIME/DIV	AUTO

4. Connect the CALIBRATOR signal to the INPUT connector on the plug-in module with a short length of coaxial cable. Adjust the SWP CAL and the HORIZ POSITION controls to align the second and tenth vertical signals with the second and tenth vertical graticule lines counting from the left edge.

5. Set the FREQUENCY SPAN/DIV to 2 kHz, Display Mode 2 dB/div, and DISPLAY A and B on. Adjust the VERT POSITION control to place the display baseline on the bottom horizontal graticule line.

6. Set RESOLUTION control to 3 kHz and DOT FREQUENCY to 500.00 kHz.

7. Select the LOG 10 dB/DIV pushbutton and adjust the LOG CAL control for a full screen (8 division) display.

8. Select the LOG 2 dB/DIV pushbutton and adjust the AMPL CAL (on plug-in module) for a full screen display.

9. Repeat steps 7 and 8 until the displayed waveforms are 8 vertical divisions in both log amplifier settings. (Refer to Fig. 3-3, Log Amplifier Calibration Composite Waveform.) If desired, check linearity of the 10 dB/div display by increasing the REFERENCE LEVEL in 10 dB steps. Adjust LOG CAL slightly to correct any non- linearity.

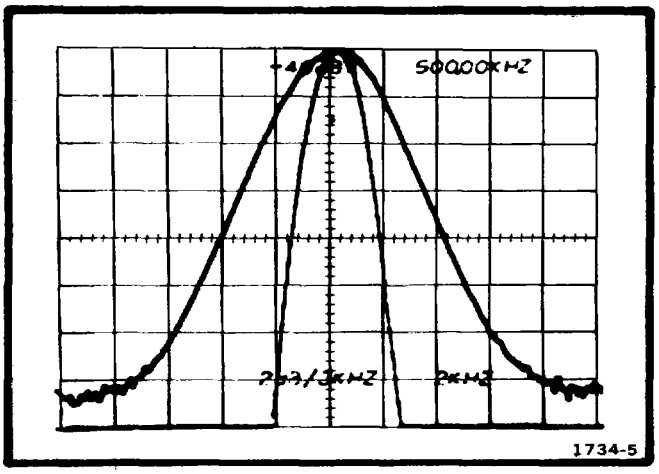

Fig. 3-3. Log amplifier calibration composite waveform.

OPERATIONAL CHECKOUT

Introduction

This is an operational checkout procedure intended to satisfy most customer's receiving inspection requirements and to provide instrument familiarization for the new user We recommend using this checkout as part of the users routine maintenance program and a preliminary check before performing the Performance Check portion of the Service Instruction manual.

The front panel CALIBRATOR output is an accurate signal source and is used in the following procedures to verify operational status of the instrument. Calibrator frequency accuracy may be verified by applying it to an accurate digital counter.

Some procedures require a step attenuator and two short lengths of coaxial cable. To verify the absolute reference level specifications, the attenuator accuracy must be calibrated or verified at some specific frequency, to within 0.03 dB/dB with a cumulative error not to exceed 0.1 dB for any change up to 10 dB. Incremental accuracy can be verified and a good indication of the absolute reference level accuracy can be obtained by using two Tektronix Step Attenuators, such as the 2701 (see Optional Accessories, Section 1). These attenuators provide a good indication of operation even though their accuracy specifications are not within the limits described.

1. Preliminary Preparation

Preset the front panel controls and selectors as described under Calibrating the 7L5 to the Oscilloscope Mainframe and perform the calibration procedure as previously described.

2. Operational Check of Readout Characters

With the 7L5 installed and operating in a 7000-Series mainframe, perform the following steps to check the readout operation.

Dot Frequency Readout

a. Verify that the dot frequency readout is 0.00 kHz after initial turn-on. (Readout characters for the dot frequency are located near the top edge of the crt and can be identified by the suffix characters kHz).

b. With the FINE TUNING pushbutton not illuminated (inactive), verify that the DOT FREQUENCY control changes the value of the readout characters in 10 kHz increments.

c. Rotating DOT FREQUENCY control cw should increase the readout and ccw rotation should decrease the readout.

d. Activate the FINE TUNING pushbutton and verify that the DOT FREQUENCY control changes the value of the readout characters in 250 Hz increments.

e. Verify that continuous cw rotation of the DOT FREQUENCY control causes no change of the readout characters after an indicated 4999.75 kHz.

NOTE

Following a change of the DOT FREQUENCY control, the first click in the opposite direction will have no effect.

Reference Level Readout (L1 Plug-In Module)

f. Select the LOG 2 dB/DIV mode and set the dBm/dBV switch (on the plug-in module) to dBm. Verify that the indicated value of the reference level changes by 13 dB (e.g., -40 dBV = -27 dBm). Reference level readout characters are located near the top edge of the crt and can be identified by the suffix characters dBm or dBV.

g. With the UNCAL light off, rotate the VAR (variable) control and verify that a < symbol (not calibrated) prefixes the reference level readout. Rotate the VAR control to its maximum ccw (detent) position and verify that the < symbol is no longer displayed.

h. Pull the REFERENCE LEVEL control out to its coarse position and verify that the value of the reference level readout changes in 10 dB steps. Push the REFERENCE LEVEL control in to its fine position and verify that the value of the reference level readout changes in 1 dB steps.

i. Verify, that rotation of the REFERENCE LEVEL control beyond the reference level limits of; -128 dBm (-141 dBV), In the 1 dB/step position, or; -70 dBm (-83 dBV) in the 10 dB/step position-for the one extreme-and +21 dBm (8 dBV) for the other extreme remains constant. (These extremes are applicable only for 50 Ω plug-in modules.)

J. With the REFERENCE LEVEL control at max ccw position, select the LIN mode and verify that the readout changes to 200 mV.

k. Rotate the REFERENCE LEVEL cw and verify that the readout changes from mV to μV to nV in a 2-1-5 sequence. Verify that continuous cw rotation of the REFERENCE LEVEL control causes no change of the corresponding readout characters beyond 20 nV.

Time/Div Readout

I. Set the FREQUECNY SPAN/DIV switch to 0. Rotate the TIME/DIV control to each of its positions and verify that its front panel designations correspond to the crt readout characters. (Readout characters for the sweep time per division are located near the bottom right edge of the crt and can be identified by the suffix character S when the FREQUENCY SPAN/DIV is set to 0.)

Frequency Span/Div Readout

m. Set TIME/DIV control to AUTO and the RESOLUTION control to COUPLED. Rotate the FREQUENCY SPAN/DIV control to each of Its positions and verify that the readout characters correspond with the front panel designations and change In accordance with the readout listed in Table 3-1. (Readout characters for frequency span per division setting occupy the same crt position as the time per division readout characters. They are located near the bottom edge of the crt and except for the 0 span setting, can be identified by the suffix characters Hz.)

TABLE 3-1

FREQUENCY SPAN/DIV control settings	FREQUENCY SPAN/DIV readout
0	10 ms
50 (Hz)	50 Hz
1 kHz	100 Hz
.2 kHz	200 Hz
.5 kHz	500 Hz
1 kHz	1 kHz
2 kHz	2 kHz
5 kHz	5 kHz
10 kHz	10 kHz
20 kHz	20 kHz
50 kHz	50 kHz
.1 MHz	100 kHz
.2 MHz	200 kHz
MAX	500 kHz

Resolution Readout

n. Rotate the RESOLUTION control to each of its: positions and verify that the readout characters correspond with the front panel designations. (Readout characters for the resolution function are located near the bottom edge of the crt and can be identified by the suffix characters Hz.)

o. With the RESOLUTION control in the COUPLED position, rotate the FREQUENCY SPAN/DIV to each of its positions and verify that the RESOLUTION readout characters change in accord with Table 3-2.

TABLE 3-2

FREQUENCY SPAN/DIV control settings	RESOLUTION readout
MAX (500 kHz)	30 kHz
200 kHz	30 kHz
100 kHz	30 kHz
50 kHz	10 kHz
20 kHz	3 kHz
10 kHz	3 kHz
5 kHz	1 kHz
2 kHz	300 Hz
1 kHz	300 Hz
.5 kHz	100 Hz
2 kHz	30 Hz
.1 kHz	30 Hz
50 (Hz)	10 Hz
0	30 kHz

Vertical Amplifier Mode Readout

p. Select the 10 dB/DIV pushbutton switch and verify that the readout characters for the vertical amplifier mode indicate 10 dB/ Readout characters for the vertical amplifier mode are located near the lower edge of the crt and for the log positions, can be identified by the suffix symbol /.

q. Select the 2 dB/DIV mode and verify that the readout characters indicate 2 dB/.

r. Push the LIN pushbutton and verify an absense of readout characters for vertical amplifier mode.

Uncalibrated Readout

s. Set the RESOLUTION control to COUPLED and the FREQUENCY SPAN/DIV control to MAX. Rotate the TIME/DIV cw until the UNCAL light is illuminated. Verify that a > symbol prefixes the referenced level readout characters. Rotate the TIME/DIV ccw until the UNCAL light is extinguished Verify that the > symbol is no longer displayed

3. Dynamic Range

NOTE

The full dynamic range of the Log 10 dB/div and the Log 2 dB/div is not measured in the following paragraphs. If the log amplifiers include a negative error, full range verification would require signal level measurement below the display baseline. Since this is not possible, the following steps verify 78 of the 80 dB range and 15 dB of the 16 dB range for the two log amplifier selections.

LOG 10 dB/DIV (Dynamic window is 80 dB, accuracy is ±0.05 dB/dB to 2 dB maximum)

a. Set the 7L5 controls as follows:

DOT FREQUENCY	500.00 kHz
RESOLUTION	COUPLED
FREQUENCY SPAN/DIV	0.1 kHz
TIME/DIV	AUTO
REFERENCE LEVEL	-40 dBV
dBm/dBV (L1 Plug-in)	dBV

b. Apply the CALIBRATOR signal through external attenuator(s), such as Tektronix, 2701 (for 50 Ω)-see Optional Accessories in Section 1-to the INPUT connector. Select the LOG 10 dB/DIV pushbutton.

c. Increase external attenuation in 10 dB steps to 70 dB and verify that each step decreases the displayed f signal level 10 dB ±0.5 dB.

d. Increase external attenuation by 8 dB (for a total of 78 dB) and verify that the total overall decrease in signal amplitude is 78 dB ±2 0 dB.

LOG 2 dB/DIV (Dynamic window is 16 dB, accuracy is ±0.01 dB/dB to ±1 dB maximum)

e. Set the external attenuators to 0 dB. Set the FRE- QUENCY SPAN/DIV to 50 Hz, RESOLUTION to 30 Hz and select the 2 dB/DIV pushbutton.

f. Add 15 dB attenuation, with the external 1 dB step attenuator, in 2 dB and 1 dB increments. Verify that the signal level change, is within 0.1 dB/dB of added attenuation to a maximum of 1.0 dB deviation over the 15 dB range.

LIN Linearity

g. Select the LIN pushbutton and adjust the REFERENCE LEVEL control for a crt readout of 500 pV/ (per division).

h. Add 10 dB of external attenuation. Adjust the VAR control for a signal display amplitude of 8 divisions.

i. Add 6 dB of external attenuation. Verify that the signal amplitude decreases to 4.0 ±0.2 division (±5%) or half amplitude.

j. Add an additional 6 dB of external attenuation and verify that the display amplitude decreases to 2.0 ±0.1 division.

VARiable Control Range

k. Insert 10 dB of external attenuation. Select the 2 dB/DIV pushbutton and rotate the VAR control fully cw. Adjust the REFERENCE LEVEL to set the displayed signal amplitude to a vertical reference point near full screen.

l. Rotate the VAR control fully ccw (detent position). Verify that the signal amplitude decreases at least 4.0 divisions. Decrease external attenuation to return the signal amplitude to the reference point and verify that the required change was 8 dB or more.

4. Reference Level Accuracy (within 0.2 dB/dB with a cumulative error not to exceed 0.25 dB for any change up to 10 dB)

The external attenuator accuracy requirements to perform this step, have been described in the Introduction to this Operational Check procedure. Reference level increments are 1 dB and 10 dB steps. Circuitry of the 7L5 provides 1, 2, 4, 8, and 16 dB gain steps. These steps, or combinations of the steps, provide the reference level range. This procedure checks the accuracy of each gain cell and thus the overall accuracy. The accuracy of the V/Div mode will be within that specified if the Log mode reference level is within limits. A few check points may be performed as listed in Table 3-4 to spot check Lin mode operation.

This procedure uses a 50 0 plug-in module (L1):

a. Switch the dBm/dBV selector (on the plug-in module) to dBm and set the 7L5 controls as follows:

REFERENCE LEVEL	-29 dBm
RESOLUTION	3 kHz
FREQEUNCY SPAN/DIV	1 kHz
TIME/DIV	AUTO

b. Set the external attenuation to 2 dB and adjust the REFERENCE LEVEL for a readout of -29 dBm. Adjust the VERT POSITION control slightly, as required to establish a graticule reference point for the signal peak.

c. Change the REFERENCE LEVEL control to -30 dBm. Increase the external attenuation 1 dB (3 dB total) and verify that the signal peak is within 0.2 dB of the reference point established in step b.

d. Rotate the REFERENCE LEVEL control to -31 dBm. Increase the external attenuation another 1 dB (4 dB total) and verify that the signal peak is within 0.25 dB of the reference point.

e. Readjust the VERT POSITION control, as required, to establish a new graticule reference point for the signal peak.

f. Pull the REFERENCE LEVEL control out to the 10 dB/step position and set it for a crt readout of -41 dBm. Increase the external attenuation 10 dB (14 dB total) and verify that the signal level is within 0.25 dB of the reference point established in step e.

g. Check the Reference Level accuracy for the remaining range by following the settings listed in Table 3-3 and noting the error.

TABLE 3-3

Reference Level (dBm)	External Attenuation (dB)	Allowable Limits (dB)
-41	14	0.25
-51	24	0.50
-61	34	0 75
-71	44	1.00
-81	54	1.25
-91	64	1.50
-101	74	1.75
-111	84	2.00
-121	94	2.25

LIN Accuracy

g. Set the external attenuator to 0 dB. Select the LIN pushbutton and adjust the REFERENCE LEVEL control for a crt readout of 10 mV.

h. Set the external attenuator and the REFERENCE LEVEL control to the positions listed in Table 3-4. Check that the measured signal amplitudes are in accordance with those listed in Table 3-4.

TABLE 3-4

Attenuator Setting (dB)	Voltage Input	Reference Level Volts/DIV	Signal Amplitude in Div's ±5%
0	10 mV	2 mV	5
20	1 mV	0.2 mV	5
40	100 µV	20 µV	5
60	10 µV	2 µV	5
80	1.0 µV	200 nV	5

5. Input Buffer (Operational check only)

a. Apply the CALIBRATOR signal to the INPUT on the plug-in module. Set the 7L5 front panel controls as follows:

DOT FREQUENCY	500.00 kHz
RESOLUTION	3 kHz
FREQUENCY SPAN/DIV	1 kHz
TIME/DIV AUTO	
INPUT BUFFER	Off
LOG 2 dB/DIV	On

b. Establish a signal amplitude of 7 divisions with the REFERENCE LEVEL control

c. Switch the INPUT BUFFER on and verify that the display amplitude does not change more than 1 dB (.05 div).

d. Change the RESOLUTION to 10 kHz and check amplitude change of the calibrator signal with the INPUT BUFFER on and off.

6. Residual (Incidental) FM (Incidental FM is <1 Hz, 50 Hz/div to 2 Hz/div and <40 kHz, 5 kHz/div to 500 kHz/div)

a. With the CALIBRATOR signal applied to the INPUT of the plug-in module, set the 7L5 front panel controls as follows:

DOT FREQUENCY	500.00 kHz
REFERENCE LEVEL	-57 dBM
RESOLUTION	COUPLED
FREQUENCY SPAN/DIV	50 (Hz)
TIME/DIV AUTO	
LOG 2 dB/DIV	On
INPUT BUFFER	Off
DIGITAL STORAGE	Off

b. Select the MNL SWP pushbutton and adjust the MNL SWP control to place the trace dot halfway up one side of the displayed 10 Hz filter waveform, near center screen. Verify that incidental FM (short term, peak to peak movement of trace dot) is less than 1.0 vertical division (1 Hz).

c. Set the RESOLUTION control to 300 Hz, the FREQUENCY SPAN/DIV to 5 kHz, and the REFERENCE LEVEL to -62 dBm. Adjust the MNL control to place the trace dot halfway up one side of the displayed 300 Hz filter waveform, near center screen. Verify that maximum vertical jitter of the trace dot does not exceed 1.2 division (40 Hz)

7. Residual Response (Plug-in module dependent. Internally generated spurious signals are down 130 dB or more with the L1 Plug-In Module)

NOTE

Each 7L5 Spectrum Analyzer is carefully tested at the factory to ensure that all internally generated spurious responses are below-130 dBm. Thorough verification of this specification would take several days. A procedure to check the full frequency range (to - 110 dBm) and to spot check 100 kHz of the total frequency range, to -130 dBm is given in the following steps. The 100 kHz frequency range chosen is 300 through 400 kHz. The procedure can also be used to spot check any 200 kHz span within the 0-5 MHz capability of the instrument.

a. Terminate the input connector with a resistive load that equals the characteristic input impedance of the plug- in module. Set the 7L5 front panel controls as follows:

DOT FREQUENCY	500.00 kHz
RESOLUTION	300 Hz
FREQUENCY SPAN/DIV	100 kHz
TIME/DIV	AUTO
LOG 10 dB/DIV	On
REFERENCE LEVEL	-70 dBm
INPUT BUFFER.	Off
BASELINE CLIPPER	max cw
DIGITAL STORAGE	DISPLAY A/B
SAVE A	Off
MAX HOLD	Off

b. Press the SGL SWP pushbutton twice to initiate a sweep. (Additional sweeps are initialiated each time the SGL SWP pushbutton is pressed.) Observe the display for spurious response (spurs). Verify that, except for the O Hz response, the amplitude of any observed spur is -110 dBm (40 dB below -70 dBm).

c. Sequentially reset the DOT FREQUENCY control to 1500 00 kHz, 2500.00 kHz, 3500.00 kHz, and 4500.00 kHz and repeat step b at each frequency setting.

d. Set the DOT FREQUENCY control to 305.00 kHz, the RESOLUTION to 30 Hz, and the FREQUENCY SPAN/DIV to 1 kHz.

e. With TRIGGER SOURCE in FREE RUN, select the SGL SWP pushbutton and observe the display for spurs. Verify that the amplitude of any observed spurious response is at least 130 dB below 0 dBm. (Press SGL SWP again as required for observation.)

f. Increase the dot frequency in 10 kHz increments and repeat step e until the display is scanned from 305.00 kHz to a dot frequency of 395.00 kHz.

NOTE

To measure the amplitude of a spur, carefully reset DO T FREQUENCY to place and keep the spur within one division of center screen. Continue to reduce the frequency span per division with each sweep until maximum amplitude of the spur has been determined.

8. Sensitivity Check (Sensitivity is plug-in module dependent)

NOTE

The sensitivity for the 7L5 Spectrum Analyzer is specified with an L1 or L2 Plug-In Module using the equivalent input noise method. Sensitivity specifications and test procedures for other plug-in modules are described in the Instruction manual for the respective plug-in module.

The 7L5's internal reference level, as indicated by the display readout, is used as the reference in the following procedure. The accuracy of the reference level readout may be verified using external test equipment and the procedure provided in the Service Instructions.

a. Set the front panel controls as follows:

DOT FREQUENCY	1000.00 kHz
RESOLUTION	30 kHz
FREQUENCY SPAN/DIV	.1 kHz
TIME/DIV	10 s
LOG 10 dB/DIV	On
REFERENCE LEVEL	-70 dBm
INPUT BUFFER	Off
DIGITAL STORAGE	DISPLAY A/DISPLAY B
TRIGGERING	FREE RUN and NORM

b. Terminate the INPUT in its characteristic impedance (50 0 for the L1) to prevent outside noise from entering and cluttering the display.

c. Measure the average noise level by adjusting the AVERAGE LEVEL cursor above the noise peaks and noting the noise level.

d. Check the average noise level for each resolution bandwidth listed as per Table 3-5.

TABLE 3-5

RESOLUTION	Average Noise Level
30 kHz	-105 dBm or less (35 dB below reference)
10 kHz	-110dBm or less (40 dB below reference)
3 kHz	-115 dBm or less (45 dB below reference)
1 kHz	-120 dBm or less (50 dB below reference)
300 Hz	-125 dBm or less (55dB below reference)
100 Hz	-130 dBm or less (60dB below reference)
30 Hz	-133 dBm or less (63 dB below reference)
10 Hz	-135 dBm or less (65 dB below reference)

e. Remove the termination from the INPUT connector.

9. Resolution Bandwidth Accuracy, Amplitude Deviation, and Shape Factor

Bandwidth accuracy; within 20% except 10 Hz position which is 100 Hz ±20 Hz, 70 dB down. Shape factor; 5:1 or better (30 kHz-3 kHz) and 10'1 or better (1 kHz-10 Hz). Amplitude deviation; less than 0 5 dB (30 kHz-100 kHz) and less than 2.0 dB (30 kHz-10 Hz).

a. Apply the CALIBRATOR signal to the INPUT on the plug-in module and set the front panel controls as follows:

DOT FREQUENCY	500.00 kHz
RESOLUTION	30 kHz
TIME/DIV	AUTO
DIGITAL STORAGE	DISPLAY A/DISPLAY B
DISPLAY MODE	LOG 2 dB/DIV

b. Adjust the REFERENCE LEVEL and FREQUENCY SPAN/DIV controls to establish a signal response that is 7 divisions high and about3 divisions wide at half amplitude.

c. Switch the RESOLUTION from 30 kHz to 100 Hz and reset the FREQUENCY SPAN/DIV as required so the signal amplitude deviation over the 30 kHz to 100 Hz resolution range can be observed.

d. Total deviation over the range should not exceed 0.5 dB.

e. Switch the RESOLUTION through the 30 kHz to 10 Ht range and check that the amplitude deviation does not exceed 2 0 dB

f. Return the RESOLUTION selector to 30 kHz, the FREQUENCY SPAN/DIV control to 10 kHz, and adjust the REFERENCE LEVEL control for a signal amplitude of 7 divisions

g. Measure the bandwidth at the 6 dB down point by using the DOT FREQUENCY control to shift the signal across a graticule reference line and noting the frequency difference from one side to the other.

h. Bandwidth must equal the RESOLUTION setting ±20 percent or 30 kHz ±6 kHz.

i. Repeat this procedure to check the -6 dB bandwidth of each RESOLUTION setting from 30 kHz through 3 kHz Verify that the bandwidth of each position is within 20 percent Note these measurements for future use when measuring the shape factor.

j. Set the RESOLUTION selector to 1 kHz, the FREQUENCY SPAN/DIV to 1 kHz or less, and adjust the REFERENCE LEVEL for a signal amplitude of 7 divisions.

k. Use the DOT MKR to adjust the signal position so the -6 dB bandwidth can be measured in graticule divisions. Convert the number of divisions to frequency by noting the setting of the FREQUENCY SPAN/DIV selector Resolution bandwidth must equal the RESOLUTION setting ±20 percent.

l. Repeat this procedure to check the resolution bandwidth for RESOLUTION settings from 1 kHz through 30 Hz Bandwidth must equal the RESOLUTION setting ±20 percent.

m. Switch to the 10 dB/DIV display mode Set the RESOLUTION selector to 10 Hz, the FREQUENCY SPAN/DIV to 50 Hz, and adjust the REFERENCE LEVEL for a signal amplitude of 8 divisions.

n. Measure the bandwidth 70 dB down by using the DOT MKR to position the display across a reference point as previously described Bandwidth must equal 100 Hz ±20 Hz (70 dB down) q

o. Return the RESOLUTION selector to 30 kHz, the FREQUENCY SPAN/DIV to 10 kHz and measure the bandwidth 60 dB down using the procedure previously described.

p. Check the shape factor (60.6 dB ratio) by measuring the 60 dB bandwidth for all RESOLUTION settings and compare this with the previous -6 dB bandwidth readings noted in steps g though l. Shape factor for RESOLUTION setting from 30 kHz to 3 kHz must equal 5:1 or better Shape factor for RESOLUTION settings from 1 kHz to 10 Hz must equal 10:1 or better.

USING THE ANALYZER

Impedance Matching

Input impedance of the 7L5 Spectrum Analyzer is determined by the plug-in module (L1, L2, L3, etc.). Impedance mismatch between a signal source and the module's input connector causes reflections or standing waves in the interconnecting transmission line and results in signal amplitude errors of the display and an overall degraded performance of the analyzer To minimize the probability of an impedance mismatch, the signal source and transmission lines, fastened to the Input connector, should have the same impedance as the plug-in module. Use cables of minimum length, and good quality. Amplitude error due to plug-in swr will be improved by turning on the 7L5's INPUT BUFFER

Signal Application

High amplitude signals (above +21 dBm or 2.5 V rms) will overload and damage the mixer circuit and should not be applied to the input connector (See the plug-in instruction manual for maximum allowable input power) Signals of unknown amplitude should be routed through a attenuator If spurious or multitone intermodulation signals are present on the display, or, if saturation of the mixer is suspected, the 7L5 INPUT BUFFER will add 8 dB of attenuation in series with the input signal. If the displayed signals show little or no change with the buffer on, the intermodulation or spurious signals are not generated by the spectrum analyzer.

Edge Noise

When using the digital storage mode, some applications may leave display remnants at the edges of the crt. This condition is an unavoidable result of the storage memory being wider than the crt screen and not a malfunction. Edge noise is removed as follows: 1) Disconnect any signal from the INPUT connector. 2) With digital storage on the FREQUENCY SPAN/DIV set to other than MAX, rotate DOT MKR control to max cw position 3) After one sweep has occurred, to extend the baseline, rotate the DOT MKR control max ccw to the detent position. 4) Wait one sweep to clear the left edge then apply the input signal.

Frequency Measurement Technique

Frequency measurement should be made on the second or subsequent sweeps after the DOT FREQUENCY has been changed. (Oscillator stabilization time is 1 second or less.)

Following a change of the DOT FREQUENCY control, the first click in the opposite direction will have no effect. This is due to the electronic coupling within the DOT FREQUENCY control assembly.

Max Span Operation

When the 7L5 is operated with the FREQUENCY SPAN/DIV control set to MAX (500 kHz), optimum instrument performance will be ensured by setting the RESOLUTION to 30 kHz or COUPLED position. The COUPLED position will maintain a desired ratio of 20:1 or less between the frequency span per division and the resolution bandwidth.

Resolution, Resolution Bandwidth

The, term resolution represents an instrument's ability to display adjacent signal responses discretely. A measure of resolution is the frequency separation in hertz of responses which merge with a 3 dB notch. Displayed resolution is a function of spectrum analyzer bandwidth, horizontal sweep rate and frequency span. Resolution is also affected by incidental (residual) FM.

Resolution bandwidth, as defined for the 7L5, is the width in hertz between 6 dB down image points, on the curve of the analyzer's displayed response, to a cw input signal.

Bandwidth determines both the noise level and resolution capability of the analyzer. As bandwidth decreases, both sensitivity and signal-to-noise ratio improve. Maximum sensitivity is obtained when resoltuion bandwidth is narrow (10-30 Hz).

For most applications, the analyzer should be used with the RESOLUTION control set to COUPLED and the TIME/DIV switch set to AUTO. These auto-ranged positions provide the best sweep rate and resolution bandwidth for each setting of the FREQUENCY SPAN/DIV switch. When the analyzer is used to make amplitude measurements, especially in digital storage mode, the COUPLED and AUTO positions of these controls ensures maximum accuracy.

Digital Storage Use

When using digital storage, the best measurement accuracy is obtained by setting the following controls as follows; (see Fig. 3-2, Front Panel Controls.)

1.	VIDEO PEAK/VIDEO AVERAGE:	Adjust to place the cursor at a point midway between maximum signal amplitude and baseline noise.
2.	DISPLAY A/ DISPLAY B	Press both pushbuttons to activate storage operation
3.	RESOLUTION	Set to COUPLED position.
4.	TIME/DIV	Set to AUTO position or a position that is compatible with the setting of FREQUENCY SPAN/DIV control (UNCAL light not illuminated).

Applications for Spectrum Analyzers

Applications for spectrum analyzers such as the 7L5 include; measuring intermodulation products, radiation interference, modulation percentage, absolute and relative signal level measurements, bandpass characteristics, etc. Numerous application notes on spectrum analyzer measurements are available from your local Tektronix Field Office or representative, including assistance for specific measurement applications you may desire.

PART II

TABLE OF CONTENTS

SECTION 1. GENERAL INFORMATION

INTRODUCTION AND DESCRIPTION

To effectively use the 7L5 Spectrum Analyzer, the operation and capabilities of the instrument must be known. This instruction manual covers general service information for the instrument. It contains the specification, test and calibration procedure, circuit description, and maintenance procedure for the 7L5.

The 7L5 is a 5 MHz spectrum analyzer with digital storage. Frequency stability is within 5 Hz/hr and center frequency (dot) can be read with six digit accuracy immediately after turn-on; therefore there is no need to fine tune the display. Complex measurements and analysis can be made with relative ease. Built-in microprocessing circuits decode control settings, process frequency and reference level information, and optimize sweep time and resolution for the selected frequency span. At turn-on, the 7L5 is preset to a reference level of +17 dBm (50 Ω input) and center frequency of 00.0 kHz. This provides input attenuation to protect the front-end circuitry and a marker to verify correct operation.

The 7L5 with 80 dB or more of spurious free dynamic range provides the ability to measure wide relative amplitudes. Nanovolt sensitivity provides very low-level signal and noise requirements.

The 7L5 display is fully calibrated in dBm, dBV, or volts/div. The reference level can be accurately set in 1 dB increments.

A front panel input buffer control increases front-end immunity to intermodulation distortion while maintaining a constant reference level.

To accommodate a wide variety of impedance sources, the 7L5 uses quick disconnect plug-in input impedance modules of 50 Ω, 75 Ω, 600 0, 1 MΩ/28 pF and customized units to meet special requirements.

When the 7L5's digital storage capability is employed, one or two complete displays can be held in memory for subsequent viewing, comparison, or graphic reproduction. This capability converts a nonstorage, 7000-Series oscilloscope display into a stored display. The small dot size (of the conventional oscilloscope) used with the 7L5 enhances the resolution of low amplitude signals and other fine details that are often lost with a variable persistence oscilloscope. In storage mode, the vertical display may be bisected by an averaging threshold, above which video peak detection occurs (prior to storage) and below which video signal averaging occurs (prior to storage). Denoted by a cursor, the averaging threshold is continuously adjustable with a front panel control. The storage circuitry includes a maximum hold capability. This feature allows monitoring of signals that may change with time to provide a graphic record of amplitude/frequency excursion.

WARNING

The following service instructions are for personnel qualified to service electronic circuits. Personnel not familiar with electrical circuit operation should not perform any service other than that contained in the Operating Instuction manual.

MANUAL ORGANIZATION AND CONTENT

The abbreviations, graphic symbols, and logic symbology used in the text and diagrams of this manual are in accord with and based on ANSI Y1.1-1972, ANSI Y 32.3-1975, and ANSI Y32.14-1973 (American National Standard Institute, 345 East 47 Street; New York, N.Y. 10017).

Change information is contained on insert pages at the back of the manual. Original pages are identified by the symbol @ and revised pages are identified by a revision date in the lower inside corner of the page. If the serial number of your instrument is lower than the one on the title page, the manual contains revisions that may not apply to your instrument. History information, applicable to previous products, with the updated data, is integrated when the page or diagram is revised. The following describes the sections and information provided in this manual.

Section 1-General Information: Contains the instrument description and specification.

Section 2-Circuit Description: Provides basic and general circuit theory. This information may be useful when servicing or operating the instrument.

Section 3-Performance Check: Procedure.; to verify that the instrument is performing within its specified limits.

Section 4-Calibration Procedure: Test equipment setup and adjustment procedures required to calibrate the instrument.

Section 5-Maintenance: Describes routine and corrective maintenance procedures with detailed instructions for replacing assemblies, sub-assemblies, or individual components. An exploded drawing is part of Section 9. Troubleshooting procedures plus general information that may aid in servicing the instrument are also provided.

Section 6-Options Information: Describes options to the instrument or directs the reader to where the options are documented.

Section 7-Replaceable Electrical Parts: Provides information necessary to order replaceable parts and assemblies.

Section 8-Diagrams: Functional block diagrams and detailed circuit schematics are provided. Located adjacent to the diagram (usually on the back of the preceding diagram) are pictorial layout drawings that show subassembly and component locations. Integrated circuit diagrams, waveforms and voltage data for troubleshooting or circuit analysis are also provided adjacent to or on the diagram.

Section 9-Replaceable Mechanical Parts, Exploded Drawings and Accessories: Provides information necessary to order replaceable parts. The Replaceable Parts list is cross-referenced to the Replaceable Electrical Parts list. The exploded drawing identifies assemblies and mechanical components.

Change Information: Provides updating information in the form of inserts for the manual. These inserts are later incorporated into the manual text and diagrams when the manual is reprinted.

ELECTRICAL CHARACTERISTICS

The following electrical characteristics apply when the 7L5 Spectrum Analyzer, in combination with a Plug-In Module, are normally installed in a 7000-Series oscilloscope and after a warm-up of ten minutes or more.

Frequency Characteristics

Range

Input Frequency: 10 Hz through 5.0 MHz.

Dot Frequency: 0 Hz through 4999.75 kHz.

Accuracy

20°C to 30° C: ±(5 Hz + 2 x 10^{-6} of dot readout).

0°C to 50°C: +(20 Hz + 10^{-5} of dot readout).

Drift

5 Hz/hour or less.

Residual (Incidental) FM

50 Hz/div to 2 kHz/div: 1 Hz (p-p) or less.

5 kHz/div to 500 kHz/div: 40 Hz (p-p) or less.

Resolution Bandwidth

Accuracy

30 kHz--30 Hz: Within 20% of selected resolution (6 dB down).

10 Hz Within 100 Hz ±20 Hz (70 dB down).

The COUPLED setting electronically selects the best resolution bandwidth for each setting of the FREQUENCY SPAN/DIV control.

Shape Factor

30 kHz-3 kHz. 5:1 or better (60:6 dB ratio).

1 kHz-10 Hz: 10:1 or better (60:6 dB ratio).

Amplitude Deviation

30 kHz-100 Hz: 0.5 dB or less.

30 kHz-10 Hz: 2.0 dB or less.

Input Characteristics

CAUTION

The application of a dc voltage to the INPUT of the L1 or L2 Plug-In Modules may cause permanent damage to the mixer circuit.

Input Impedance (Nominal):

L1 50 Ω
L2 75 Ω
L3 Selectable (50 Ω, 600 Ω, and 1 MΩ/28 pF).

Input Power (maximum input level for reference levels of 0 dBm or greater):

L1 21 dBm or 2.5 V rms
L2 21 dBm or 3.07 V rms
L3 21 dBm-input terminated 50 Ω or 600 Ω; 100 V (peak ac + dc) input 1 MΩ/28 pF.

Input Power (maximum input level for reference levels below 0 dBm):
L1 +10 dBm
L2 +10 dBm
L3 +10 dBm--input terminated 50 Ω or 600 Ω, and 100 V (peak ac + dc) with input of 1 MΩ/28 pF.

Amplitude Characteristics

NOTE

If digital storage is used, an additional quantization error of 0.5% of full screen should be added to the amplitude characteristics.

Residual Response

Internally generated spurious signals are -130 dBm or less referred to the input (harmonics of the calibrator are -125 dBm) with L1 or L2 plug-in module and -143 dBV with the L3 plug-in module.

Sensitivity

The following tabulation of equivalent input noise for each resolution bandwidth is measured with, the INPUT BUFFER off, the VIDEO PEAK/AVG at max cw, and the TIME/DIV set to 10 seconds.

Resolution Bandwidth	Equivalent Input Noise (equal to or better than)		
	L1	L2	L3
10 Hz	-135 dBm	-135 dBm	-148 dBV
30 Hz	-133 dBm	-133 dBm	-146 dBV
100 Hz	-130 dBm	-130 dBm	-143 dBV
300 Hz	-125 dBm	-125 dBm	-138 dBV
1 kHz	-120 dBm	-120 dBm	-133 dBV
3 kHz	-115 dBm	-115 dBm	-128 dBV
10 kHz	-110 dBm	-110 dBm	-123 dBV
30 kHz	-105 dBm	-105 dBm	-118 dBV

NOTE

Sensitivity is degraded an additional 8 dB when the INPUT BUFFER is on; e.g.. at 3 kHz, the equivalent input noise would be -107 dBm instead of -115 dBm. Noise level will increase by approximately 10 dB when operation is in video peak mode.

Intermodulation Distortion

Intermodulation products from two on-screen signals, within any frequency span are ≥75 dB down for third order products and at least 72 dB down for second order products.

Second and third order intermodulation products from two on-screen -53 dBV or less signals within any frequency span are at least 80 dB down.

With the INPUT BUFFER switch on, the third order Intermodulation products, for any two on-screen signals, within any frequency span, are at least 80 dB down.

Display Flatness

Peak to peak deviation, over any selected frequency span: Quantization error must be added (see Note under Amplitude Characteristics) if digital storage is used.

L1 0.5 dB;
L2 0.5 dB;
L3 0.5 dB;
Reference Level

Refers to top graticule line in Log mode. Calibrated in 1 dB and 10 dB steps for the L1 and L2 modules and 1 dB/2 dB and 10 dB for L3 plug-in module.

Range	L1	L2	L3
Log 2 dB/Div	-128 dBm to -21 dBm	-128 dBm/ 139 dBV to +21 dBm/ +10 dBV	-128 dBm to +21 dBm (50 Ω),
			-139 dBm to +10dBm (600 Ω),
			-141 dBV to +8 dBV (Hi Z)
Log 10 dB/Div	-70 dBm to +21 dBm	-70 dBm/ -81 dBV to +21 dBm/ +10 dBV	-70 dBm to +21 dBm (50 Ω),
			-81 dBm to +10dBm (600 Ω),
			-83 dBV to +8 dBV (Hi Z)

Incremental Accuracy

When calibrated at -40 dBV in Log mode:

L1, L2 and L3 Within 0 2 dB/dB with cumulative error of 0.25 dB/10 dB

Lin Mode Range. 20 mV/Div to 200 mV/Div within 5% in 1-2-5 sequence.

NOTE

A >sign is displayed adjacent to the reference level readout when the reference level is not calibrated due to an incompatible selection of controls.

Display Dynamic Range/Accuracy

Log 10 dB/Div Mode' Dynamic window is 80 dB. Accuracy is within 0.05 dB/dB to 2 dB maximum.

Log 2 dB/Div Mode Dynamic window is 16 dB. Accuracy is within 0 1 dB/dB to 1 dB maximum.

Sweep Characteristics

Frequency Span. Provides calibrated frequency spans from 50 Hz/div to maximum (500 kHz/div), within 4%, in 1-
2-5 sequence.

Horizontal linearity is within 4% over the entire 10 div display.

A 0-Hz/Div position is provided for time domain operation

Sweep Rate. Time per div is selectable from 10 s/Div to 0.1 ms/Div in a 1-2-5 sequence. An AUTO position permits automatic selection of optimum time/div for the selected resolution and span/div.

Sweep rate accuracy is within 5% of the rate selected.

Triggering Provides two triggering sources, INT (internal) and LINE, in addition to a FREE-RUN position.

When INT is selected, ac coupled signal components from the mainframe Trigger Source (left or right vertical amplifiers) are used.

When LINE is selected, ac coupled sample of mainframe line voltage is used.

Three triggering modes are; NORM (normal), SGL SWP/READY (single sweep), and MNL SWEEP (manual sweep)

Trigger level is ≥1.0 div of internal signal for both NORM and SGL SWP modes over the approximate frequency range of 30 Hz to 500 kHz.

Output Connectors

Video Out. Front-panel pin jack connector supplies the video (vertical) output signal at an amplitude of 50 mV/div ±5% (about the crt vertical center) with source impedance of 1 kΩ.

Horiz Out. A front-panel pin jack connector supplies horizontal output signal (negative-going sawtooth that varies from 0.0 V dc to approximately -6 V dc with a source impedance of 5 kΩ.

Calibrator. Front panel BNC connector supplies a calibrated 500 kHz squarewave output signal (derived from the analyzer's time base). Output amplitude is within ±0.15 dB of -40 dBV into impedance of the plug-in module.

Environmental Characteristics

The 7L5 Spectrum Analyzer will meet the foregoing electrical characteristics within the environmental limits of a 7000-Series oscilloscope. Complete details on environmental test procedures including failure criteria etc., can be obtained from a local Tektronix Field Office or representative.

Physical Characteristics

Net weight (instrument only): 8 pounds, 12 ounces.

ACCESSORIES AND OPTIONS

Refer to the Replaceable Mechanical Parts List for a complete listing of the standard and optional accessories.

Options

7L5 Option 21 -(Log Display)
7L5 Option 25-(Tracking Generator)
7L5 Option 28-(Readout)
7L5 Option 30-(Option 21/25)
7L5 Option 31 -(Option 21/28)
7L5 Option 32-(Option 25/28)
7L5 Option 33-(Options 21/25/28)

INSTALLATION

Initial Inspection

This instrument was inspected both mechanically and electrically before shipment. It should be free of mars or scratches and electrically meet or exceed the specification. Inspect the instrument for physical damage and check the electrical performance by the Operational Check procedure provided within the Operators Instruction Manual. This procedure will verify that the instrument is operating correctly and it will satisfy most receiving or incoming inspection requirements. If the instrument specification is to be verified, refer to the Performance Check procedure in this manual.

If there is physical damage or performance deficiency, contact your local Tektronix Field Office or representative.

Installation

Install in a 7000-Series mainframe and after a 10 minute or more warm-up check performance. To calibrate or service the 7L5, connect it to the 7000-Series mainframe interface through flexible plug-in extenders (see Equipment Required; Calibration section).

REPACKAGING FOR SHIPMENT

If your Tektronix instrument is to be shipped to a Tektronix Service Center for service or replacement attach a tag showing; owner (with address) and the name of an individual at your firm that can be contacted. Include complete instrument serial number and a description of the service required.

Save and re-use the package your instrument was shipped in. If the original packaging is not available or is unfit for use, repackage as follows:

1. Obtain a shipping container of heavy corrugated cardboard or wood with inside dimensions at least six inches greater than the instrument dimensions. This will allow room for cushioning. Refer to Table 1-1 for carton test strength requirements.

2. Wrap the instrument in heavy paper or polyethylene sheeting to protect the instrument finish. Protect the front panel with urethane foam or cardboard strips.

3. Cushion the instrument on all sides by packing dunnage or urethane foam between the carton and the instrument, allowing three inches on all sides.

4. Seal the shipping carton with shipping tape or an industrial stapler.

TABLE 1-1

Gross Weight (lb)	Carton Test **Strength (lb)**
0-10	200
10-30	275
30-120	375
120-140	500
140-160	600

If you have any questions, contact your local Tektronix Field Office or representative.

SECTION 2. CIRCUIT DESCRIPTION

Introduction

The 7L5 is a swept front-end spectrum analyzer with selectable front-end plug-in modules that permit the user to obtain a calibrated display for a number of different impedance (i.e., 50 ohm, 600 ohm, etc.). The plug-in module contains: selectable attenuation, the first mixer, input low-pass filter, and an input buffer selector that trades noise figure for IM performance. Signal attenuation in the plug-in and gain of the IF processing chain are controlled by a reference level logic circuit in the 7L5 which provides calibrated settings in 1 dB or 10 dB steps over a range of 149 dB.

Functional Block Diagram

The input signal to the 7L5 is mixed with the frequency of the main oscillator and fed to the IF at 10.7 MHz and amplified by the 10.7 MHz IF amplifier. Since the7L5 input frequency range is O to 5 MHz, the main oscillator is tuned and swept from 10.7 to 15.7 MHz. The frequency of the main oscillator is controlled by two secondary (A and B) oscillators that use a synthesizer technique to tune and phase lock their frequencies. The sweep frequency control circuit drives the oscillators according to the settings of front panel DOT FREQUENCY and FREQUENCY SPAN/DIV controls.

The signal at 10.7 MHz Is processed through a band- pass filter and amplifier, then mixed with the output from a 10.450 oscillator to down-convert the 10.7 MHz to an IF of 250 kHz. Gain of the 250 kHz amplifier is controlled by the reference level logic circuit which establishes the amount of attenuation in the plug-in module and gain for the 250 kHz IF and Log amplifiers. The reference level is selectable in 1 dB and 10 dB steps.

The 250 kHz IF signal is processed through the variable resolution filter circuits for bandwidth selections of 10 Hz to 30 kHz. The signal is again amplified, detected, and the video is sent through amplifier circuits that provide the 10 dB/div, 2 dB/div, and linear gain characteristics.

The video signal is then fed to the display processing circuits where the signal is either stored and displayed, or if the storage mode is not selected, the signal is passed directly through the vertical output amplifier to the mainframe circuit. If either or both the DISPLAY A or DISPLAY B latches are enabled, the signal is converted to digital data, stored in A or B memory, then converted back to analog data and processed through the output amplifiers to the circuit. The vertical information is digitized and stored at 512 horizontal address locations across the screen. Therefore, the horizontal sweep information is converted to digital data for storage, then converted back to an analog signal for display. The horizontal sweep ramp is processed the same as the vertical signal. The vertical (video) information can be averaged or peak detected.

IF Processing Chain 1 b

This block diagram shows more detail of the circuitry involved with processing the IF signal from the 1st mixer. Signal loss through the 1st mixer is about 9 dB. The IF output of 10.7 MHz passes through an input and 30 kHz filter to Improve flatness, then a 30 kHz crystal filter shapes the response to the band pass characteristics of the Instrument. A -40 dBm signal Is required at this point for full screen deflection.

Signal level is increased 20 dB by the 10.7 MHz IF amplifier; it is then fed through the 300 kHz bandpass filter to the 2nd mixer. The 2nd LO frequency of 10.450 MHz mixing with 10.7 MHz produces an IF of 250 kHz which is fed through a 500 kHz lowpass filter to the 250 kHz amplifier. The loss through the 350 kHz and 500 kHz filters plus the 2nd mixer is about 10 dB; thus a -30 dBm signal level is required at the input of the 250 kHz amplifier to obtain full screen deflection.

The 2nd LO frequency is controlled by a phase lock loop which uses 50 kHz and 100 kHz submultiples of a master 10 MHz crystal controlled oscillator to drive 500 kHz and 100 kHz reference frequencies. The gain of the 250 kHz IF amplifier is controlled by the decoded output from the reference level counter. The reference level counter in turn, is controlled by the front panel REFERENCE LEVEL control. Gain of the amplifier is adjustable in 1, 2, 4, 8, and two 16 dB steps. The attenuators, in the plug-in module are 4 dB, 8 dB, and 32 dB. Combinations of attenuators and IF gain are selected by the reference level counter and provide gain changes of 1 dB or 10 dB steps, depending on the position of the REFERENCE LEVEL control. The crossover point (no attenuation and unity gain through the amplifier) is -30 dBm.

The REFERENCE LEVEL control is a printed circuit switch that outputs a two bit binary code that repeats every four times. The code indicates the direction the control is rotated and an IC determines whether the count is up or down. The output code of the control, clocks a counter which provides the reference level required to drive the readout. Analog currents are provided by a ROM which is reading the output of the counter. When the REFERENCE LEVEL control is pulled out, for 10 dB steps, the counter counts in tens instead of digits. When LIN mode is selected or the dBm/dBV switch on the plug-in module is changed, the readout changes the Reference Level Counter so the crt reference level readout is in Volts/Div or dBV. The value of the constant to the counter depends on the input impedance of the plug-in module. This establishes a calibration reference level commensurate with the respective input impedance of the "L" plug-in module.

The inputs to the IF Gain and RF Attenuation Decoding block are the output from the Reference Level Counter and the Log 10 or Log 2 switch latches. The output supplies four gain change lines to the IF amplifier and the attenuator codes for the plug-in module. An invalid code is fed back to stop the counter when the reference level reaches a lower limit.

The output of the 250 kHz IF is fed to the Variable Resolution Filter. Bandwidths of 10 Hz to 3 kHz are selected by one filter block and 10 kHz and 30 kHz bandwidths by a second block. Signal routing through the filters, is controlled by the resolution code which in turn may be controlled by the RESOLUTION control. For automatic or coupled operation, a ROM selects the appropriate resolution bandwidth so the bandwidth and frequency span are compatible. If the operator selects a resolution that is not appropriate for the FREQUENCY SPAN selected, the ROM activates a CAL light to invalidate the reference level reading and the readout presents a < symbol in front of the reference level readout.

The output signal from the Resolution Filters is fed through a Post VR Amplifier then a Log/Lin amplifier. The response amplitude level is now either Log 10, Log 2, or Linear depending on the setting of the log/lin latches. These latches are activated by front panel momentary contact pushbuttons. Log 10 control is also fed to the IF Gain and RF Attenuation Decoder.

The IF is then detected and the output video signal fed to another Log/Lin amplifier for gain adjustment between the Log/Lin displays. Part of the output is fed to U2005 to provide push-pull trigger signals (+ and -) to the main- frame and video signals to the VIDEO OUT jack on the front panel. The main video signal is fed to the display processing circuits where it is processed either through amplifiers to the mainframe for display, or, if the 7L5 is operating in the store mode, the signal is stored in memory, and then displayed as the memory is refreshed or updated.

Sweep Control and Frequency Reference (1) a

The Sweep Control circuit uses an IC that features; sweep gating, bright baseline, holdoff timing, automatic free run, lockout, single sweep and single sweep ready light control. The gate signal drives the sweep generator which in turn sends a sweep through the Manual Sweep switch to the Display Processing and circuitry related to the sweep for the A and B oscillators. Inputs to the sweep control IC include triggering source and mode signals. Trigger modes are set by latches that are actuated by front panel momentary contact pushbutton switches.

When SGL SWP is selected, the sweep is locked out until the SGL SWP button is pushed again. The circuit is now armed and the sweep will run if the trigger source is FREE RUN or when a trigger signal arrives. A built in delay of approximately 10 seconds allows the sweep to run if no trigger arrives (not in 0 Hz span). This keeps the memory capacitors for phase lock loop, of the A and B oscillators, refreshed.

When MNL SWP is selected the Sweep Generator is used as a 100 second timer to refresh the memory capacitors. The Sweep Control allows the Sweep Generator to free run; however, the Manual Sweep switch now selects the voltage output of the LEVEL/SLOPE control for the Sweep Horizontal signal.

When the sweep mode is NORM, sweep operation is conventional. The LEVEL/SLOPE control selects the triggering level and slope unless the mode is MNL SWP. It then becomes a manual sweep control.

The sweep generator contains an end of sweep comparator that outputs a pulse which is fed back to the sweep control IC to terminate the output gate and inhibit the sweep. The end of sweep pulse is OR'd with an output line from the phase lock logic circuit, which goes high at the end of the gate pulse period and holds this state until the sweep control circuit has stabilized about (50 ms) then it pulls the Ready line low. The state of the I and Sense lines, from the dot frequency control and phase lock loop circuit must also be correct before the phase lock logic circuit will permit the sweep control and sweep generator to start another sweep. Sweep lockout, by the dot frequency and phase lock loop circuits, is ignored when the Frequency Span/Div is ZERO.

The sweep rate is controlled by the TIME/DIV selector unless AUTO position is selected. When AUTO is selected, sweep rate is controlled by a ROM which looks at the FREQUENCY SPAN/DIV and RESOLUTION selections to determine the sweep rate. The RESOLUTION and FREQUENCY SPAN/DIV selectors are both printed circuit switches that feed their output into ROMs. The ROMs then control the frequency span and resolution bandwidth of the instrument and provide readout data to the circuit. The RESOLUTION selector has a COUPLED position where a ROM determines the optimum resolution for the selected FREQUENCY SPAN/DIV. In the manual positions of the RESOLUTION and TIME/DIV selectors, the uncal comparator monitors the sweep rate versus resolution bandwidth and Frequency Span/Div setting. It lights an UNCAL indicator when the display is not calibrated. At the same time a > symbol precedes the Reference Level readout to indicate that the readout is not calibrated.

Frequency Reference

The center frequency of th span is programmed into .N counters which are part of a frequency and phase lock synthesizer loop. Two of these -N control loops set and lock the frequency of two secondary (A & B) oscillators which are part of a third loop that controls the 1st LO frequency. The 1st LO center frequency, therefore, is dependent on the programmed data in the -. N counters. The frequency span of the 1st LO depends on the ramp amplitude out of the sweep attenuator circuits. During retrace time, the secondary oscillators are locked to the center frequency. During lock the sweep reduces to a voltage of zero. The time shared dot position is therefore, derived from an equivalent sweep voltage of zero. Frequency of the dot position is displayed by the crt readout. Accurate frequency measurements can be performed by tuning any desired segment of the display under the frequency dot and read out on the crt. In most cases readout accuracy is <1% of the display span or within ±50 Hz.

In all frequency span positions except MAX span, the frequency dot is at the center or start of the display. In MAX span the center frequency of the span is 2.5 MHz. The frequency dot moves across the display as the center frequency is tuned. The frequency readout accuracy of the dot remains constant.

A simplified block diagram of the Frequency Reference circuitry is shown in Fig. 2-1. The frequency to be measured (fm), is fed to the 1st mixer in the plug-in module, where it is mixed with the output from the 1st LO. The output IF of 10.700 MHz is fed to the 2nd mixer where it is mixed with 10.45 MHz from the 2nd LO and converted down to a 250 kHz IF. The 2nd LO frequency is referenced to 500 kHz, a submultiple of a 10 MHz Master Oscillator.

Frequency Control Circuits

As previously described, two divide by "N" (N. and N2) control loops, with their oscillators, determine the frequency of the 1st LO. A 11.1 MHz to 16 MHz, "A" oscillator mixes with the frequency of the 1st LO (10.7 to 15.7 MHz). The difference is compared with the 40th sub-harmonic of a 12 to 16 MHz "B" oscillator in a $\Delta f/\Delta\varnothing$ detector. Any difference produces an error voltage that is fed back though a summing amplifier to pull the 1st LO into a locked mode with both A and B oscillators.

The frequency of both secondary (A and B) oscillators is controlled by ÷N loops. The value N is determined by the DOT frequency control. This control tunes the A oscillator in 100 kHz increments and the B oscillator in 10 kHz steps. (100 kHz and 10 kHz increments originate from the 10 MHz master oscillator.) The frequency of the B oscillator is divided down by 40 so the frequency into the comparator steps in 250 Hz increments. If the DOT frequency is 0 Hz, the frequencies of the A and B oscillator are 11.1 MHz and 16.0 MHz. The input to the phase lock comparator ($\Delta f/\Delta\varnothing$ detector) from the ÷40 source is 400 kHz (16 MHz - 40). The difference frequency out of the A oscillator and the 1st LO mixer must also be 400 kHz for the system to lock. Since the A and B oscillators are

referenced to the same reference (10 MHz master oscillator) the 1st LO is locked to 10.7 MHz (11.1 MHz-400 kHz). Frequency' changes to either A or B oscillators require a change in the value of "N" that is loaded into up/down counters for the respective control loops.

The DOT FREQUENCY will tune either the B oscillator in 10 kHz steps or the A oscillator in 100 kHz steps. The frequency of the 1st LO (and the dot) can therefore be tuned in 250 Hz or 100 kHz steps depending on which latch is enabled.

A more detailed block diagram of the Frequency Reference circuit is provided by the Sweep Control and Frequency Reference Block Diagram (1a) in the Diagrams section.
T

The 10 MHz of the crystal oscillator or Master Oscillator frequency is divided down to 100 kHz and 500 kHz by two counters. 100 kHz is fed to one input of a phase comparator for the A oscillator loop. It is also divided down to 10 kHz for application to one input of a phase comparator for the B oscillator loop. The output voltages of the comparators are applied through logic circuitry to memory capacitors in each oscillator loop. The logic circuitry gates the comparator reference voltage to this memory circuit during retrace or the Lock portion of the sweep cycle. This charge or reference voltage on the memory capacitor is summed with the sweep ramp from the frequency span (Sweep Control) circuit. The resultant voltage is applied through amplifiers to the A or B oscillator to control their frequencies.

The A oscillator output is mixed with the 1st LO frequency and the difference frequency applied to one input of a phase comparator and loop filter. The other input, to the phase comparator, is the 40 sub-frequency of the B oscillator. Any difference between the two frequencies prodices an error voltage which Is applied to the 1st LO to correct and control the 1st LO frequency. The oscillator frequencies can be expressed as:

$$f(1^{st}\ LO = f\ (A\ OSC) - \frac{f\ (B\ OSC).}{40}$$

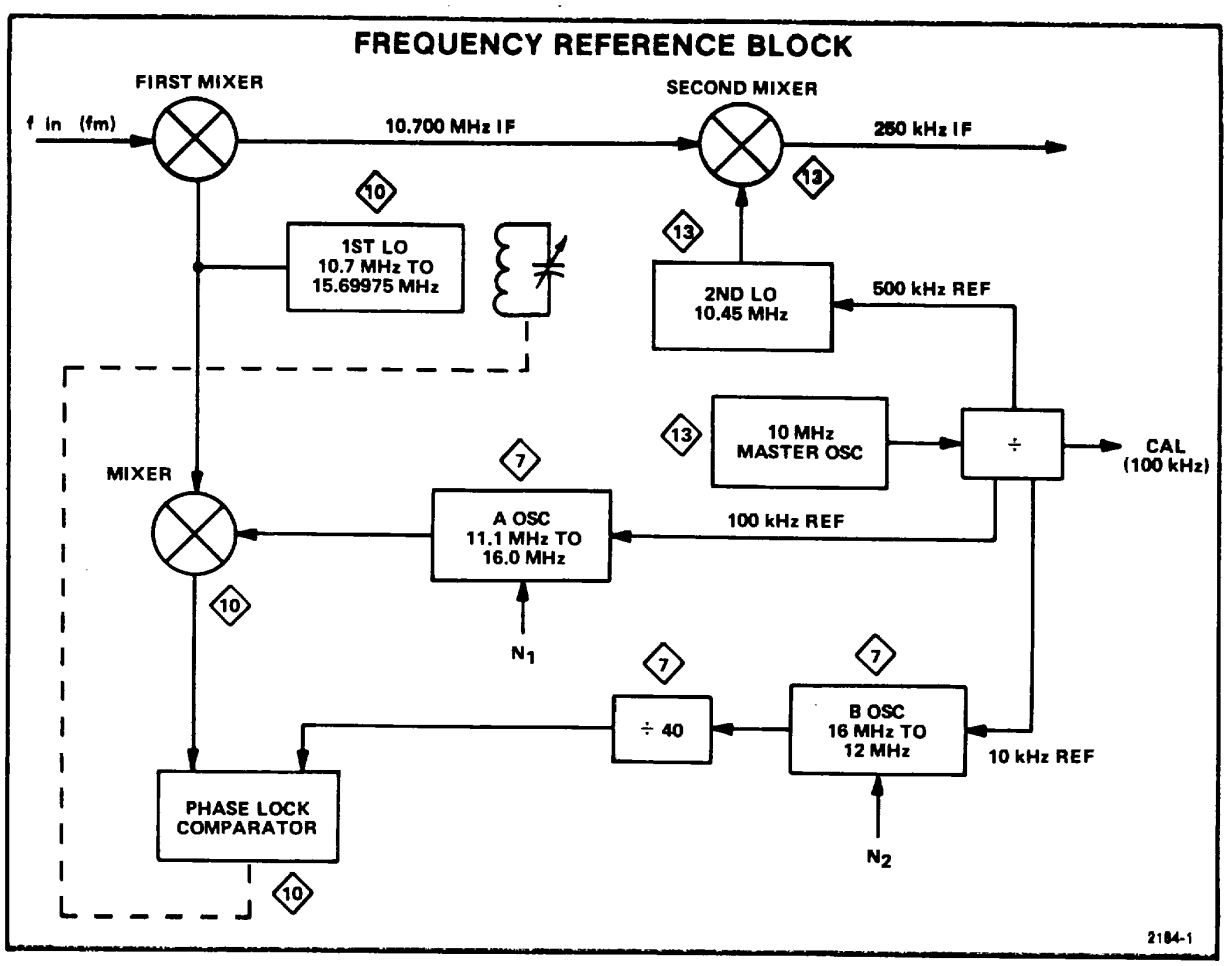

Fig. 2-1. Frequency reference block diagram

Output frequencies of the A oscillator and B oscillator are fed back to A ÷ N and B ÷ N circuits. The value "N" assumes depends on the setting of the dot frequency control circuit. For example, a frequency of 16 MHz out of the A oscillator requires an "N" factor of 160 to divide 16 MHz down to 100 kHz, so the frequency into the phase comparator equals the 100 kHz at the other input to the comparator. As the dot frequency is changed, the "N" factor into either the A ÷ N or B ÷ N circuit changes to increase or decrease the A or B oscillator frequency. Since the 1st LO is slaved to these oscillators, its frequency must also change.

The Frequency Span/Div circuit determines the amount the A or B oscillator frequency is swept. The sweep horizontal voltage is applied through an attenuator and binary switch to a summing point, either in the A memory or B memory reference voltage line. The FREQUENCY SPAN/DIV selector sets the amount of sweep attenuation and thus the frequency span. The output of the SPAN/DIV selector is also fed to a ROM which looks at the selected span and chooses one of three sweep outputs from the binary controlled switch. These ramps are used for different span/div frequencies (50 Hz to 2 kHz, for the B oscillator frequency loop, 5 kHz to 200 kHz and 500 kHz or MAX span for the A oscillator loop). Since the loop sensitivity of the two oscillator loops differ by a factor of 100, the attenuator settings are used twice to cover the full range (50 Hz to 500 kHz) of the FREQUENCY SPAN/DIV.

When the FREQUENCY SPAN/DIV is not in the MAX span position, the MAX switch closes to allow a dot marker voltage to be summed in with the A oscillator control loop so the dot can be positioned along the left portion of the 5 MHz display.

A turn-on circuit (on the left side of the diagram) forces a free run and normal selection of the trigger circuits, a dot frequency of 000, reference level of +17 dBm, and Display A, Display B store modes when power is applied.

Readout

A block diagram of the Readout circuits is shown in Fig. 2-2. Along the left side are the front panel selectors. The DOT FREQUENCY control drives a TEKTRONIX IC which provides the column data for the top horizontal readout location on the crt. Current for the Hz and kHz readout is supplied by a resistor matrix. Row data also comes from a fixed resistor matrix.

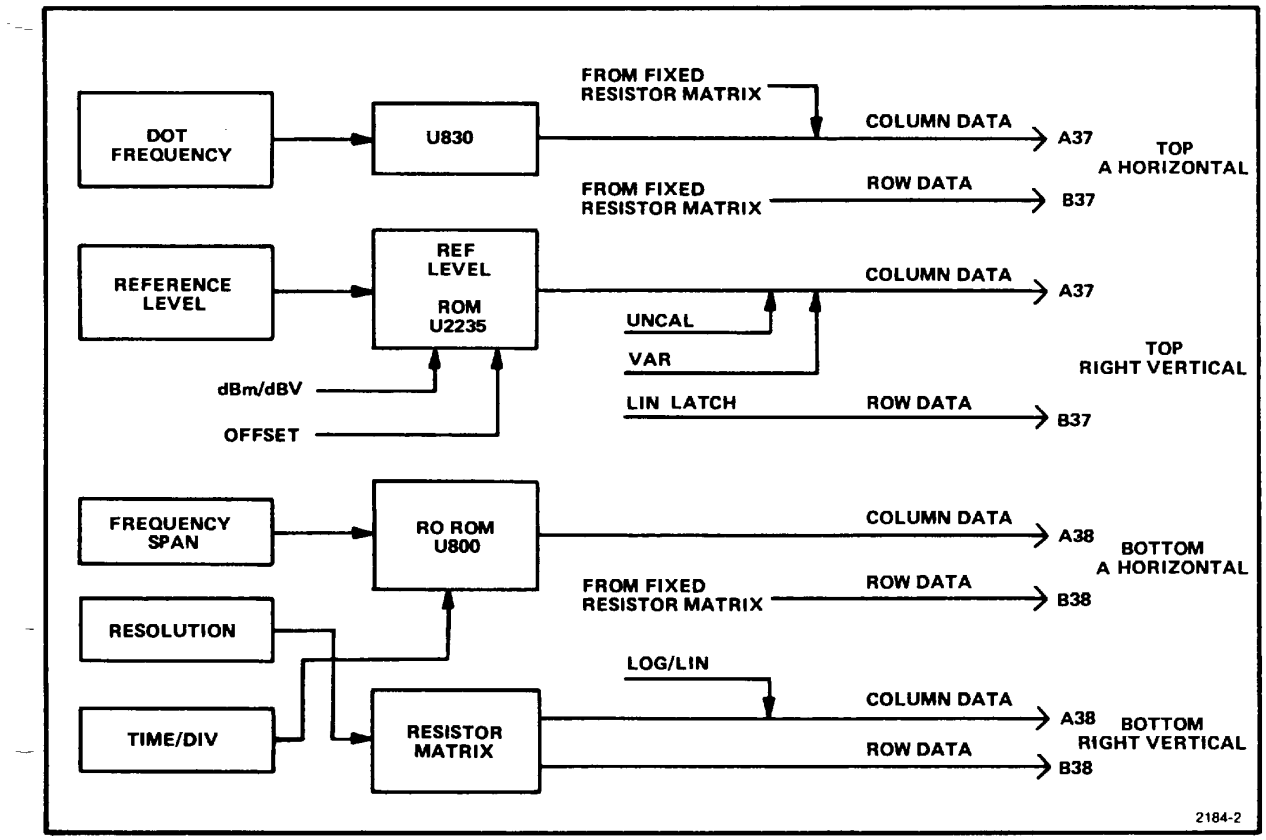

Fig. 2-2. Function block of readout circuits.

The REFERENCE LEVEL drives U2235 which provides column data current for the top right vertical readout position. The output of the U2235 is influenced by the setting of the dBm/dBV selector and the offset set by the input impedance of the plug-in module and the reference level selected. The LIN switch latch changes the row data so the readout is in nV,,µV, and mV instead of dBm or dBV. (The column data is also changed so the correct numbers are read out.)

The FREQUENCY SPAN/DIV drives ROM U800 which provides the column data for the bottom A horizontal position Row data is from a fixed resistor matrix. If zero span is selected, it reads in time/division.

The RESOLUTION selector drives a resistor matrix that provides both column and row data to the bottom right vertical part of the display. The column data also gets the 10 dB, 2 dB, or; if LIN mode is selected, that portion of the display is a space.

Display Processing Block Diagram 1 c

The video signal from the IF processing chain is fed through switch U735B to an A/D converter. The digital data from the converter is then placed in memory. It is read from memory and displayed at the command of Display A and Display B selectors. Before the vertical data is placed in memory, it may be either averaged or peak detected. Vertical data is placed at an address in memory derived from the sweep horizontal waveform. How the address is derived will be described later.

Referring to the lower left side of the diagram, the 1st LO tune voltage ramp is fed to an absolute value circuit, which looks at the ramp excursion. If the ramp exceeds certain limits, the output from the comparator is an overspan signal which opens the video path through switch U735B A dc level is placed on the line to provide a baseline for the display. Unless overspan is detected, the video signal is fed to display switch U735C and the vertical analog-to-digital (A/D) converter. The video information is converted to an 8 bit data word that appears in serial form on the Data Out line. The clock for this converter is 1 MHz, derived from the 10 MHz master oscillator, so the vertical data bits are 1 pus apart. Since there are 8 bits per word plus a sync pulse, each word takes 9 us or the word rate is 111 kHz. The vertical data out, in serial form, then goes to an average calculator where it is either averaged or peak detected. The output (on the Math line) is then stored at some address in memory.

The address is derived from the horizontal sweep ramp. This is a 10 volt negative-going ramp centered around the Dot frequency The ramp is offset (up to plus or minus 10 volts) as the dot frequency is tuned so the sweep ramp range can run from 10 V to +10 V (-10 V to O V at one end and 0 V to +10 V at the other). The sweep is converted, by the horizontal A/D converter, to address data for memory. Memory consists of a 4096 (512 x 8) bit RAM and a 1024 (1024 x 1) bit overflow or offset RAM. The 4096 bit RAM has 512 horizontal access lines Memory is divided into an A and B section with 256 lines assigned to each. Address locations are determined by the LSB (least significant bit) of the horizontal address word. Since the LSB of this word alternates with any count, the A and B locations in memory are adjacent with the odd bit assigned to A memory and the even bit to B memory sections.

The horizontal address is a 10 bit word The first 9 bits (2^9) are derived from the sweep ramp and stored in the first RAM. The tenth bit (MSB) is stored in the overflow or offset RAM This tenth bit signifies the offset (to the right or left of center screen) of a given address and since the offset can be up to ±10 V, a 20 volt ramp capability is provided.

At the slower sweep speeds, there are numerous words of vertical data for each horizontal address location. These numerous words of vertical data are averaged, by the average calculator, so with a 10 second sweep rate, up to 20,000 words are averaged at a horizontal address. At the 2 ms sweep rate, only four words would be averaged.

At the end of an 8 bit vertical word a sync pulse is sent out on the EOC (end of conversion) line to the display control timing block and through the synchronizer to the average calculator. When the sweep horizontal signal has traversed far enough to generate a new horizontal address, the EOC starts a three cycle sequence that writes a vertical word in memory at that address. This process requires 27 µs (3 x'9 µs). The rest of the time is utilized in the display mode to read from memory. At the beginning of the three cycle process the first cycle generates Start Divide to the average calculator. The average circuit divides the accumulated vertical data by the number of words during' that period, and the resultant or quotent is gated into memory on the Math line, when the second cycle or Write Cycle arrives. Write Cycle signal is generated only when Valid is present. Valid is not present during retrace or when the dot frequency is changing

The output of the horizontal display generator consists of readout addresses to memory and a synthesized horizontal sweep ramp for the Store horizontal line. Therefore, as the vertical data is read from memory, a corresponding change occurs in the horizontal sweep voltage so the vertical data written in memory is duplicated and displayed appropriately when it is read out. Data is stored in memory at the rate set by the Time/Div selector; however, it is read from memory at a constant rate.

If Display A is selected, the LSB for the address out of the horizontal display generator remains a 1. The counter counts in odd number sequence so only data in A section of memory is read. If Display B is selected, then the counter counts in even number sequence and data in B memory, is read out. If Display A and Display B are selected then the LSB for the address alternates and data is read first from A then from B memory. If Save A is selected, A memory is not updated during Write Cycle. If Display A is selected along with Save A, then the data stored in A, when Save A was pushed, is read out.

Vertical data out of memory goes to the vertical display generator on the Memory Data line. It is converted to analog data then processed to the display circuits. A timing signal, from the vertical analog to digital converter block, controls when data is read from memory. Data can only be read during the Read Cycle. When either Display A or Display B is selected, the display control block sends a $\overline{\text{Store}}$ signal to both the vertical and horizontal display switches (U735A, U375C). Both switches then select only data from the vertical display generator and the synthesized sweep, from the horizontal display generator for the vertical and horizontal output stages.

The inverted sweep containing dot marker position is summed with the "dot position" when 0735 is on, at the input to the horizontal output stage. The summation of minus sweep with dot position plus "dot position" is minus sweep. This is amplified by the output amplifier and applied to the crt deflection plates. When 0735 is off, only the "dot position" is applied to the output amplifier and the crt deflection plates. The dot is therefore displayed independent of sweep. Sweep horizontal is also applied through a separate amplifier to the front panel HORIZ OUT jack and pin A3 of the mainframe interface.

The Z axis and dot logic block determine when the dot is to be displayed. An output called $\overline{\text{Dot}}$ is fed to multiplexer switches in the vertical and horizontal lines. This low disconnects the vertical and horizontal drive to the mainframe and positions the dot appropriately. The logic also provides blanking and unblanking to the Z axis by blanking just before the dot transition and unblanking during dot presentation. It also blanks during the transition back to normal vertical and horizontal positioning. Data into Z axis and dot logic are Zero Span, Display Valid, and the mainframe data such as Channel and Mode information.

Peak/Average reference level originates with the PEAK/AVERAGE front panel control. This reference is compared with an analog signal out of the vertical analog- to-digital converter. If the vertical signal exceeds the reference level set by the control, the average calculator selects peak value. Signals below this reference are averaged. The control functions as a Peak/Average selector only in the Store mode. Division between average and peak display is indicated by a cursor on screen. In the non- store mode the control operates as a baseline clipper. Vertical information below the level set by the control is blanked.

This completes the block diagram description for the 7L5 circuitry.

DETAILED CIRCUIT DESCRIPTION

Sweep Control (3) (4) (5)

This portion of the circuit description covers the Auto Sweep, Frequency Span and its Readout, and Trigger circuits. Diagrams 3 through 6 cover these circuits.

The Auto Sweep circuit sets the sweep rate according to the TIME/DIV selections; or, if the TIME/DIV selector is set to the AUTO position, the circuit automatically adjusts the sweep rate as a function of the FREQUENCY SPAN/DIV and RESOLUTION selector settings. If the RESOLUTION is at the COUPLED position, with the TIME/DIV at AUTO, the sweep rate and resolution are automatically computed as a function of the selected frequency span to keep the display calibrated When the sweep rate is not compatible to the resolution and frequency span, the circuit activates a front panel UNCAL indicator.

The TIME/DIV selector assembly outputs a 5 bit address, as shown in the truth table. Four bits of this address are fed to one side of four section multiplexer U525. The B inputs to the multiplexer are selected when the Select (pin 1) line is high, so the TIME/DIV assembly output is switched through to the sweep generator circuit

(Diagram 6). If the AUTO position is selected, U530D is enabled. This pulls pin 1 of U525 low and switches the multiplexer to its A inputs. The sweep rate is now a function of the address out of ROM U515.

The output address of ROM U515 is a function of the FREQUENCY SPAN/DIV and RESOLUTION control settings. This address is also fed to the B inputs of comparator U540 where it is compared with the TIME/DIV setting. If the code from the TIME/DIV selector is less than the code out of ROM U515, the output of comparator U540 goes high and, when inverted by U520E, pulls the Uncal line low to activate the UNCAL light and generate a (>) symbol as a prefex to the reference level readout.

When the RESOLUTION selector is in the COUPLED position, ROM U515 selects resolution that is compatible for the frequency span selected. The CMOS outputs for the FREQUENCY SPAN/DIV assembly are converted to TTL by the buffers (U510A, B, D, E, and F) to accommodate ROM (U650) in the Frequency Span circuit.

The outputs of the TIME/DIV and FREQUENCY SPAN/DIV selectors, are Darlington pairs which pull down to about 1.0 volt. The low state is offset two junctions below ground, by CR64 and CR66 through R512, to -15 V; so a logic low at the output is about ground potential. Logic high is pulled up through resistors in resistor pack R60.

The arm of the RESOLUTION switch is connected to the collector of 070. With resistor pack R60A in the circuit, the transistor is saturated and ground return is furnished to the switch. With the resistor pack removed the base of the transistor Is connected to the remote program line and the output is dependent on the external program. Diodes CR74 through CR76 provide isolation.

There are five lines that determine the sweep speed; four from multiplexer U525 and the fifth from the output of NAND gate U535C. The sweep generator (Diagram 6) consists of Miller integrator U700 with timing capacitors C712A and C712B. Capacitor C712B is switched into the timing circuit when the input line to pin 9 of multiplexer, (U80C) is low. C712 is in the circuit for sweep rates of 10 ms or slower. When the level at pin 9 is high, the switch opens, and C712B is out of the timing circuit.

Timing resistors are selected by multiplexer U695.Control lines A, B, and C (pins 11, 10, and 9) select the timing resistors as indicated by the address table within the symbol for U695. Voltage reference for the selected timing resistor is the output of operational amplifier U690A. When 0680 is turned on, timing voltage Is increased by a factor of two which increases the sweep speed proportionately. Table 2-1 lists the Time/Div selections with the output addresses and the corresponding addresses for U695, Q680 gate, and pin 9 of U680C. For example; 50 ms connects timing resistor R694, connects timing capacitor C712B, and turns off Q680 to add R686 as part of R, (input resistor) for operational amplifier U680A.

The Miller integrator is gated on by the +Gate signal into the base of Q705. This gate switches Q700 off and allows the Miller integrator output to ramp up. The output of the sweep generator is fed to one input of comparator U575A whose output switches high when the Input ramp reaches the reference level, set by the divider network on the other input of the comparator or about 8.9 volts. This Sweep Inhibit signal is fed back to the sweep control IC to terminate the sweep gate. Unless Manual sweep has been selected, the sweep ramp is also fed through multiplexer U680B to operational amplifier U685A. Gain of U685A is about 1.2 producing an output ramp of approximately 10.4 volt. This ramp is fed to the frequency span attenuator circuit, containing R660-U665, and to the horizontal sweep processing circuit.

TABLE 2-1
Truth Table for TIME/DIV Selections

TIME/DIV						SWEEP CONTROL				
	ST 5	ST 4	ST 3	ST 2	ST 1	U695 A	U695 B	U695 C	Q680 GATE	U680C-9
ms										
.1	0	0	0	0	0	0	0	1	1	1
.2	0	0	0	0	1	0	0	1	0	1
. 5	0	0	0	1	1	0	0	0	0	1
1	0	0	1	0	0	0	1	1	1	1
2	0	0	1	0	1	0	1	1	0	1
5	0	0	1	1	1	0	1	0	0	1
10	0	1	0	0	0	0	0	1	1	0
20	0	1	0	0	1	0	0	1	0	0
50	0	1	0	1	1	0	0	0	0	0
sec										
.1	0	1	1	0	0	0	1	1	1	0
.2	0	1	1	0	1	0	1	1	0	0
.5	0	1	1	1	1	0	1	0	0	0
1	1	0	0	0	0	1	0	1	1	0
2	1	0	0	0	1	1	0	1	0	0
3	1	0	0	1	1	1	0	0	0	0
10	1	0	1	0	0	1	1	1	1	0
AUTO	1	1	1	1	0	1	1	0	1	0

Holdoff timing capacitors, for the sweep control IC (U580 on Diagram 5), are C728 and C726. When the logic input (pin 11) to multiplexer U680A is low, C726 parallels C728 to increase the time constant. The other output of U680A (pin 13) drives the base of the transistor in U585C to provide intensity limiting to the mainframe at the slower sweep speeds (below 10 ms/div). At faster speeds, the input line is high and pin 13 is grounded, so U585C is biased off to remove intensity limiting. In manual mode or, when operating with spans other than 0 Hz, the low state into U595D turns U585C on to provide intensity limiting. Intensity limiting is therefore provided for manual sweep operation, sweep rates below 10 ms/div, and 0 Hz span operation.

Multiplexer U665 selects the attenuation ratio for the 10.4 volt sweep ramp through resistor pack R660. The attenuation address (in at A, B, and C of U665) determines the attenuation. The sweep out of U665 is then fed through multiplexer U670 to one of four output lines. Three of these (1A,1 B, and #2) drive the A and B oscillators which establish the frequency span. The fourth line Is for optional use if desired. the address within the IC symbols indicate the sweep ramp path through R660 and U670. For example; when the Input address to U685 Is 110, pin 2 of U865 is connected to the output, The sweep Is attenuated through R660 by the combination of the 4,00 k and 1,33 k resistors. Table 2-2 and 2-3 show the Input and output data for ROM U650 and multiplexers U665 and U670. Table 2-2 shows the Data Out of U650 with the corresponding sweep output line. For example; with a FREQUENCY SPAN/DIV of 50 kHz, input lines A and B to U670 are low. Address 00 (into U670) switches the sweep output of U665 to pin 12 of U670 to drive the B oscillator. Table 2-4 lists the sweep for each SPAN/DIV setting. The table bypasses ROMs U510 and U650.

The Max Span Dot Position adjustment (R655) offsets the dc level of the memory voltage so a voltage of 0 corresponds to center screen (2.5 MHz). It also offsets the dc level of the 1st LO tune voltage so a center frequency of 2.5 MHz corresponds to 0 V at the output (pin 3) of U675B for centering the overspan clipping.

The 1st LO tune voltage is a positive-going ramp, centered around some dc level set by the DOT FREQUENCY control. The amplitude of this sweep voltage depends on the setting of the FREQUENCY SPAN/DIV selector. U675A, U575C, and U575A limit the excursion of the waveform. U675B, a non-inverting amplifier, drives the negative Input of operational amplifier U675A. As the sweep ramp crosses its center point, diode CR660 dis- connects and the polarity of the input signal to the comparator U575C reverses. The input waveform to pin 7 of U575C Is therefore V shaped. This input is referenced (by a voltage divider) to about 4.5 volts. If either excursion of the V shaped waveform exceeds this reference, a positive output signal Is produced which represents an overspan. This overspan voltage is fed to a multiplexer (U735B), in the video processing chain, and the output of

TABLE 2-2
Input and Output Data for U650 (8223 ROM)

FREQ SPAN/DIV	INPUT ADDRESS(BINARY)					OCTAL EQUIV	DATA OUTPUT(BINARY)								OCTAL EOUIV	SWP
	A_4	A_3	A_2	A_1	A_0		B_7	B_6	B_5	B_4	B_3	B_2	B_1	B_0		
MAX SPAN	1	1	0	1	1	33	1	1	0	1	0	1	0	.	325	1A
200 kHz	1	1	1	1	1	37	0	0	1	1	0	1	0	1	065	1B
100 kHz	1	1	1	1	0	36	1	0	0	1	0	1	0	1	225	1B
50 kHz	1	1	0	0	1	31	1	0	1	1	0	1	0	1	265	1B
20 kHz	1	1	1	0	1	35	0	0	1	1	0	1	0	1	065	1B
10 kHz	1	1	1	0	0	34	1	0	0	1	0	1	0	1	225	1B
5 kHz	1	0	0	1	1	23	1	0	1	1	0	1	0	1	265	1B
2 kHz	1	0	1	1	1	27	0	1	1	1	0	1	1	0	166	#2
1 kHz	1	0	1	1	0	26	1	1	0	1	0	1	1	0	326	#2
.5 kHz	1	0	0	0	1	21	1	1	1	1	0	1	1	0	366	#2
.2 kHz	1	0	1	0	1	25	0	1	1	1	0	1	1	0	166	#2
.1 kHz	1	0	1	0	0	24	1	1	0	1	0	1	1	0	326	#2
50 Hz	0	1	0	1	1	13	1	1	1	1	0	1	1	0	366	#2
0 Hz	0	0	1	0	0	04	1	0	1	0	1	1	1	1	257	0
								B Control Line U670					A Control Line U670			

the detector is disconnected from the vertical output amplifier. The vertical display now becomes a dc voltage which produces a trace at the bottom of the screen. In non- store mode the overspan portion is blanked.

The lower half of multiplexer U670 provides a dc offset to the sweep ramp. In the MAX span position, the DOT FREQUENCY control moves the dot (readout) frequency across the screen. In other SPAN/DIV positions, the dot is at center screen unless it is moved by the DOT MKR control. The dot always always represents readout frequency. The dc level, set by the DOT MKR control (R50) feeds three of the inputs for the bottom half of U670. If the control address to U670 (from ROM U650) is anything except 10, the dc level of the DOT MKR control is switched through U670 to the input of operational amplifier U685B. Address code 10 occurs only when the FREQUENCY SPAN/DIV selector is in MAX span position. The offset voltage now comes from the synthesizer memory circuits. The dc output of U685B sets the input dc level of the sweep amplifier U685A to provide offset to the Sweep Horizontal ramp.

TABLE 2-3
Input Data to the Frequency Span "ROMS"

FREQ SPAN/DIV	FREQ SPAN/DIV SWITCH					U515 INPUTS					U650 INPUTS				
	TC	TJ	TB	TK	TD	A8	A7	A6	A5	A4	A4	A3	A2	A1	A0
MAX	0	0	0	0	0	1	1	1	1	0	1	1	0	1	1
.2 MHz	0	0	0	1	0	1	1	1	1	1	1	1	1	1	1
.1 MHz	0	0	0	1	1	1	1	1	0	1	1	1	1	1	0
50 kHz	0	0	1	0	0	0	1	1	1	0	1	1	0	0	1
20 kHz	0	0	1	1	0	0	1	1	1	1	1	1	1	0	1
10 kHz	0	0	1	1	1	0	1	1	0	1	1	1	1	0	0
5 kHz	0	1	0	0	0	1	0	1	1	0	1	0	0	1	1
2 kHz	0	1	0	1	0	1	0	1	1	1	1	0	1	1	1
1 kHz	0	1	0	1	1	1	0	1	0	1	1	0	1	1	0
.5 kHz	0	1	1	0	0	0	0	1	1	0	1	0	0	0	1
.2 kHz	0	1	1	1	0	0	0	1	1	1	1	0	1	0	1
.1 kHz	0	1	1	1	1	0	0	1	0	1	1	0	1	0	0
50 Hz	1	0	0	0	0	1	1	0	1	0	0	1	0	1	1
0 Hz	1	1	1	1	1	0	0	0	0	1	0	0	1	0	0

TABLE 2-4

Input and Output Data for
FREQ SPAN Multiplexers, Bypassing U510 and U650

FREQ SPAN/DIV	FREQ SPAN/DIV SWITCH					U670			U665		
	TC (FS5)	TJ (FS4)	TB (FS3)	TK (FS2)	TD (FS1)	B	A	SWP	C	B	A
MAX	0	0	0	0	0	1	0	1A	0	1	1
.2 MHz	0	0	0	1	0	0	0	1B	0	0	0
.1 MHz	0	0	0	1	1	0	0	1B	0	0	1
50 kHz	0	0	1	0	0	0	0	1B	1	1	0
20 kHz	0	0	1	1	0	0	0	1B	1	0	0
10 kHz	0	0	1	1	1	0	0	1B	1	0	1
5 kHz	0	1	0	0	0	0	0	1B	0	1	0
2 kHz	0	1	0	1	0	1	1	#2	0	0	0
1 kHz	0	1	0	1	1	1	1	#2	0	0	1
.5 kHz	0	1	1	0	0	1	1	#2	1	1	0
.2 kHz	0	1	1	1	0	1	1	#2	1	0	0
.1 kHz	0	1	1	1	1	1	1	#2	1	0	1
50 Hz	1	0	0	0	0	1	1	#2	0	1	0
0 Hz	1	1	1	1	1	0	1	0	1	0	0

Trigger Logic and Sweep Control <

Sweep and holdoff timing are controlled by IC U580. This IC provides triggered, single sweep, and free run operation. Trigger signals (+ Trigger In, -Trigger In, and Line) from the mainframe, are processed through U600 (which contains a comparator and gate) to the trigger input (pin 4) of U580. The triggering mode (Int, Line, and Free Run) is selected when the respective line to the trigger logic circuit is pulled low by the output of front panel latches. These latches are activated by front panel momentary contact switches. Sweep mode (Normal, Manual, or Single Sweep) is also set when their respective lines are pulled low. Other inputs to this circuit include; Zero Span logic line, which goes low only when FREQUENCY SPAN/DIV is at the 0 Hz position, Sense Bus, which clocks either at the 100 kHz or the 10 kHz rate until the synthesizer completes its lock up, and I line, which goes low when the dot frequency is changed so that the frequency loops must relock to the new center frequency.

Fig. 2-3 is a timing diagram illustrating the sequence of events that start with the sweep inhibit pulse into pin 1 of U580. The sweep inhibit pulse terminates the gate output. A holdoff pulse is asserted out of inverter U565A to the input of U575B. The output of U575B is inverted by U565E, and gated through U570A to maintain sweep inhibit. Holdoff timing (pin 11, U580) is set by circuitry on Diagram 6. At the time sweep inhibit is generated, the output of U560A goes low to generate Lock Pulse. Since the Zero Span line at pin 5 of U560B is held low for frequency domain displays, Lock Pulse is gated through U560B to trigger one-shot multivibrator U590B. The Q output of U590B now provides Trigger Inhibit for sweep control IC U580. This output is also fed back through U560A to maintain Lock Pulse.

When Lock Pulse is asserted, the Sense Bus begins to clock pulses in (at 100 kHz or 10 kHz rate, depending on the Span/Div setting) until the synthesizer locks. This clock pulse keeps U590B in an unstable state until the synthesizer locks up. The time constant (R593 and C593) for U560B maintains this state for an additional 50 ms. Trigger Inhibit is then terminated and U580 is ready for a trigger. The sweep, however, is still held off by Sweep Inhibit at pin 1.

U565D and U565C use a common pull-up resistor (R840F) so the output of either affects the other. They operate as a NOR gate. Therefore, a low is maintained at pin 4 of U560B when U590B is in its triggered state.

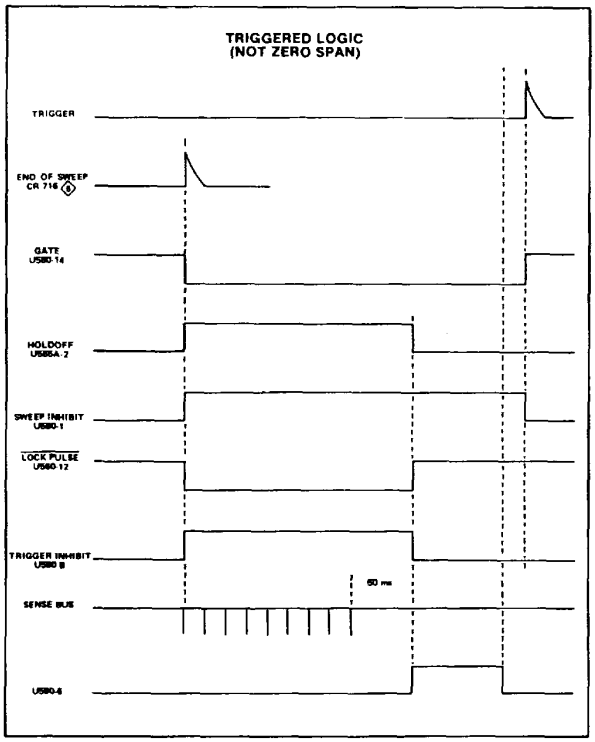

Fig. 2-3. Timing diagram of trigger logic events.

Trigger Inhibit and Lock Cycle are initiated either when the center frequency changes or at the end of sweep. When Lock Pulse and Trigger Inhibit terminate, the positive-going edge of Lock Pulse triggers one-shot multivibrator U590A. The output from U590A is inverted (U565B) and applied to "NAND" gate U570A. Since there is no negative Gate at this time, the resultant high out of U570A maintains Sweep Inhibit (at pin 1 of U580) to keep the sweep locked out. The duration of this period is either 500 ms or 40 ms depending on the state of Q591. 0591 is switched off to increase the time constant when a high out of ROM U535B (Diagram 3) is applied to the base. This occurs for the 10 Hz or 30 Hz resolution selections. The Sweep Inhibit period is therefore extended 500 ms or 50 ms (depending on the resolution) before the sweep control IC U580 will accept another trigger. This provides time for pulses that may be generated in the variable resolution filters to decay.

Bright Baseline Automatic is initiated about 10 s after end of sweep if no trigger arrives to trigger U580. The IC switches to automatic or free run operation when the Bright Baseline Timing input (pin 12, U580) charges high after Lock Pulse terminates. Charge time is set by R610 and C616.

Zero Span line goes high in 0 Hz span and inhibits gate U560B and sets Lock Pulse low. One-shot U590B is now triggered by line into pin 11 and the Q output is gated through U560A to assert Lock Pulse and inhibit Bright Baseline Automatic operation. Therefore, in time domain mode (O span). a trigger signal or free run triggering mode is required to trigger the IC. In this mode there is no need to recharge the capacitors in the synthesizer. The Ready line goes low at the end of Holdoff. This is fed back through U575B, U570B, U565E, and U570A to terminate Sweep Inhibit U580 is now ready for a trigger. Again, when dot frequency is changed, I is asserted to trigger both U590A and U590B. The output pulse from U590B is the trigger inhibit signal that delays sweep start for about 50 ms. The circuit does not terminate sweep but inhibits the start of the next sweep

Trigger logic consists of latches, a comparator, and switching gates, that select, trigger source, and trigger slope circuits. The trigger signals (+Trigger and -Trigger) are ac coupled to one side of a comparator (one section of U600) then gated through one of the two "NAND" gates to the Trigger input of U580. Pushing the front panel INT trigger source switch, pulls the Int line low. This low, applied to gates U555A and U555D, produces a high out that is fed to both inputs of gate U555B and latches the output low. This low inhibits "NAND" gate U600(D) so the output of comparator U600(B) is not gated through. This allows a '- or -Trigger signal from the mainframe to be gated through UBOO(C) to sweep control IC, U580.

When Line trigger is selected, the Line state goes low and the high out of U555B and U555D latches the output of U555A low. This inhibits the gate U600(C) so only Line trigger is fed through the comparator U600(B) and NAND gate U600(D) to U580

In Free Run mode, the low on Free Run line inhibits both NAND gates of U600. The output of U595A goes high to enable free run operation.

The LEVEL/SLOPE control selects both triggering level and slope, for the sweep modes, and functions as a manual sweep control for the MNL mode. It functions as a level/slope control as follows: The range of the control is O to +15 volts As the control is rotated through its range a ramp of approximately 10 volts is generated out of U605B. This ramp is offset (about -4 volts) by a voltage divider (R632, R636) so the voltage at the input to U605A, with the LEVEL control fully ccw, is about -4 volts. The output of U605A is about +15 V since CR638 is back biased. The comparator becomes an inverter when the input ramp (at pin 2) reaches 0 volts When operating as a comparator the output is about +14 volts. When it becomes an inverter, the Output drops to about 4 5 volts and ramps down to 0 volt as the input voltage is increased. When U605A switches, the diode CR638 is forward biased and closes the feedback loop through R634 to the input. The circuit is now a gain of one amplifier and CR630 is back-biased so the dc (reference) level to the +Trigger In line (pin 2 of U600) ramps down with the output level of U605A. The voltage ramps up at the junction of CR630, R624, CR623 from 0.6 to about 5.6 volts, then back to 0.6 volt as the LEVEL control is rotated, with 5.6 volts representing the center position of the control. A voltage divider (R638, R640) offsets the output ramp of U605A so the Slope input (pin 5) of U580 switches the IC trigger slope from + to - when the output of U605A switches from +14 volts to +5 volts. When U580 is triggering on the negative slope, the reference voltage to the comparator U600A (pin 2) ramps positive as the LEVEL control is rotated from a full ccw position to its mid point. The triggering then switches to +slope and the reference voltage ramps toward 0 volt as the LEVEL control is rotated clockwise.

When selected, the Mnl line is pulled low to latch the output of NOR gate U595A high. The sweep control IC now free runs and the charge on the memory capacitors for the synthesizer is maintained. The sweep for the horizontal deflection circuit, as previously described, is now the output from U605B. This output varies as the LEVEL/SLOPE-MNL SWP control is rotated.

Pressing the front panel SGL SWP button activates N9 w line and the outputs of U550A and U550B switch high. This high, fed back to the inputs (pins 9 and 11) of U550C, latch the output of this gate and pin 6 of U580 low. If the sweep is running, when SGL SWP mode is set, the sweep will finish its run up and stop. If the SGL SWP button is again pushed, a positive pulse is produced at the Single Sweep input of U580, and resets or arms the internal trigger circuit. The sweep will now run when U580 is triggered. This positive reset pulse is generated when the junction of R845G and R622 are pulled low by the momentary contact of the front panel SGL SWP pushbutton. The low is coupled through C622 to one input of the gate U550C. The outputs of the latch and the Single Sweep input of U580 pulses high and arms the trigger circuit within the IC.

If the sweep is running because of single sweep operation and the SGL SWP button is pushed, the sweep is terminated at that point. The trigger circuit is reset. This is produced when the positive pulse out of U550C is coupled through R629 and C629 to pin 5 of U575B. The output of U575B then asserts Sweep Inhibit and Lock Pulse cycle.

Returning to the single sweep latch U550C and its low output state when SGL SWP has been selected; the low on Ready line (from U580) enables NAND gate U570C and the output of inverter U570D lights the front panel READY indicator. The high output of U570C also turns U585E on to supply current to the mainframe interface connector A10. Remote SGL SWP Reset Is provided through the Interface connection B15.

Normal trigger mode is asserted by pulling the Norm line low. This latches the output of U550A low and the output of U550C and U550B switch high to cancel free run or single sweep operation. The low output of U550A is fed back on the Norm line to light the front panel indicator. Sweep lockout (from the mainframe) is fed in on pin B8. When this line is high, the sweep control IC is locked out This occurs during dual time-base operation or when the Reset button (for a variable persistence storage oscilloscope) is pushed. When the Reset button is pushed, it retraces the sweep.

The upper right corner of Diagram 5 contains blanking and sweep gating functions. Sweep Gate output from emitter follower Q585B provides alternate time-base trigger and unblanks A sweep for the mainframe. Q570 is turned off when digital storage is used. Unblanking from the storage circuitry is applied through U585D to U585B. During non-store operation, transistor Q575 couples the blanking and unblanking gates (out of U560C) to the Z_axis logic circuit. In store mode, the active state of Store line pulls the base of both Q575 and Q520 low and turns both transistors off. The Valid line provides vertical line validity information to the digital storage circuitry.

In the lower left corner of the diagram is power on circuit that sets the trigger latches, digital storage latches, and input buffer, when power is turned on. During the period C621 is charging to -15 volts, Q621 is on to pull Free Run and Norm, lines low. This gates the output of U555C high and the resultant RPRP (power up) line sets the digital storage latches (for Display A, Display B, not Max hold or Save A) the tuning to coarse, and switches the Input Buffer off.

Frequency Span and Readout (4)

This circuit provides row and column current for the frequency span and time/division readout that appears in the lower right section of the crt screen. Data from the FREQUENCY SPAN and TI ME/DIV photo-optic selectors, plus logic data from Zero Span and MNL swp, is fed to ROM U800. The output of the ROM is column current for the Freq Span (kHz) or Time/Div (s, ms, µ*s)* readout. U790 selects its input data from the FREQUENCY SPAN/DIV switch for all span positions. When it is set to 0 Hz, the data comes from the TIME/DIV selector. The control line for this device is the B input (pin 4). When this line is low, the X inputs are gated through and when the line is high (Zero Span line high) the device gates the Y inputs through. The output at Z_3 is Y_3 or X_3.

The BCD data out of U790 is decoded by U795. Its output drives the W (word) inputs to U800. The ROM (U800) provides column current for the lower right of the mainframe readout character matrix. Row current for the respective time slot (TS) comes from a resistor matrix(R814, R818, R820, R822). A ROM in U830 (Diagram 8)supplies the column current for the dot frequency readout.

Tune Reference ÷.N Loops (8) (9) (10)

The A and B oscillators are frequency swept during trace time and locked to a center frequency during retrace time. The lock frequency depends on the setting of the front panel DOT FREQUENCY control. This number, times the reference frequency, sets the oscillator frequency for the loop.

Referring to the A oscillator (11.1 to 16 MHz) tune reference loop, (Diagram 8) the following events occur during a lock operation: A digital number "N" is loaded into the counter (U160, U165). The oscillator frequency is counted down from this digital number in increments of 100 kHz (LSB). The output of the counter is then compared by the phase-detector (U175A, U175B) against a 100 kHz reference. Any differential in phase or frequency, generates an error voltage. This error is gated through U180 if Clock Pulse and CW are low. The error voltage charges an integrator and memory capacitor (C180) and is applied through a summing amplifier (U185) to the oscillator to pull it into a lock state. For example: If the value of "N" is 12.4 MHz, the BCD counter counts down from 400 kHz then borrows from the binary counter and cycles back through its full count of 1000 kHz until the binary counter has counted down from 12.0 MHz to 0. An output pulse from the binary counter occurs after the 12.4 MHz count-down is fed back to reset the counters. This process repeats until lock pulse goes away.

The operation of the Tune Reference (B ÷ N) loop for the B (16 to 12 MHz) oscillator, is similar to the A ÷ N loop except its input frequency is N X 10 kHz. The 10 kHz frequency increments are counted down by a ÷ 40 counter (U205, U210, U215) so the 1st LO loop shifts in 250 Hz steps. The output memory voltage of this integrator also feeds through a summing amplifier, to ramp or smooth the abrupt 100 kHz steps from the N X 100 kHz loop, before it is applied to the sweep shaper for the B oscillator.

The logic gate for the phase lock loop functions as a switch that gates the error signal, from the phase detector, to the integrator or memory. Controlling signal levels for the logic gate are Lock Pulse and CW line. A cw decoder (U650 on Diagram 6) selects which line (CW-, CW2) of the two gates is activated (pulled low). The Lock Pulse line is a common bus to both gates, from the sweep circuit (Diagram 5) which is pulled low during retrace time.

When Lock Pulse is asserted, the error signal from the phase detector is gated through the CW selected gate to charge the integrator and feed a voltage back, through summing amplifiers, to the oscillator. As the oscillator pulls toward the programmed center frequency and phase lock condition, a lock sense (Sense Bus) signal is sent tot he sweep circuit to signify that the oscillator is in a lock mode. The circuit is now ready to sweep the oscillator through this center frequency.

During sweep time, $\overline{\text{Lock Pulse}}$ goes high to disconnect the intergrator from the phase detector. The oscillator sweeps through the center frequency voltage, stored in memory, and the display chops between the sweep and the center frequency dot reference. This dot represents the programmed center frequency that was set into the - N loops and the frequency readout on the crt. Since the dot is in center screen or sweep start and the oscillators are swept through the center frequency, any signal under the displayed dot is at center frequency and the dot frequency is read out on the crt display.

In MAX span, the sweep center (about 2.5 MHz) is established by an analog voltage. The position of the frequency dot depends on the center frequency memory voltage, therefore, as the DOT FREQUENCY is tuned, the memory voltage changes and the dot moves across the display Accuracy of the dot remains constant.

Referring back to Diagram 8 (Tune Reference A ÷N); if A oscillator is phase locked, the output of the -N counters clocks the JK flip-flop U175A at precisely the same time that the JK flip-flop U175B is clocked by the 100 kHz reference. The output of the comparator is gated through U180 when $\overline{\text{Lock Pulse}}$ or $\overline{\text{CW}}$ is asserted. Output pins 11 and 13 are connected across two diodes in CR178 which connect to memory capacitor C180. U180 disconnects input pins 4 and 6 from output pins 3 and 5 unless either $\overline{\text{CW}}$ or $\overline{\text{Lock Pulse}}$ is asserted. Output pins 11 and 13 are disconnected from input pins 12and9 unless pin 15is low. When lock condition exists, the simultaneous output from the comparator is gated through to turn both diodes on together and no change occurs to the charge on C180. If the DOT FREQUENCY is changed, the counter output is not synchronized with the 100 kHz reference and the output of one flip-flop preceeds the other so the charge on the memory capacitor is changed as a function of the time (phase) shift of the two outputs. This change is applied through U185 to the A oscillator circuit as a correction voltage to pull the frequency into a lock mode.

When $\overline{\text{CW 1}}$ line is high, both sampling gates in U180 are open, ignoring the state of Lock Pulse. At this time, however, CW 2 for the B ÷ N Tune Reference (Diagram 10) is low, so the 10 kHz Sense Bus line is turned on.

When the sampling gates are open, both diodes of CR178 are back-biased. The memory capacitor C180 must maintain its charge for at least 100 seconds so it is important that the capacitor and components around it have a very low leakage. C180 has a resistance of about 5 X 1012 ohms. The sampling diodes are selected for a leakage less than 1 pA and the differential amplifier U185 has a leakage of about 0.1 pA. The common point of the diodes is an isolation point.

CAUTION

It is IMPORTANT that this point be kept clean (fingerprints or any dirt may contribute to leakage). Leakage from all sources must be kept low (≈ <2 pA). If U185 should become reverse biased, the junction may break down and introduce leakage. The instrument will appear to work correctly except in the storage mode.

NAND gates U170A and U170B ensure that the JK flip- flops, U175A and U175B, and the counters are not preset until the input oscillator frequency has completed 1/2 cycle.

A 17 bit counter U830 is clocked by the X,Y output from the DOT FREQUENCY switch. As the front panel knob is rotated, the output sequences through the digital table shown within the control symbol. The count, up or down, is determined by an exclusive OR gate in U830. The counter in U830, can be loaded some "N" number (N serial in) however, when instrument power comes up, a warmup circuit (Diagram 5) pulls this line and $\overline{\text{Load}}$ low. This presets the counter to 0 and the "N" output to 0. TS1 (pin 21) resets the shift register and is also the Serial Clock input. The sum of the time slots (1 through 7) select the appropriate column current. $\overline{\text{I}}$ (pin 5) is asserted when DOT FREQUENCY is changed and is applied to the trigger circuit.

The B ÷ N Tune Reference circuit (Diagram 9) is basically the same as the A ÷ N circuit. These counters count up. A BCD-to-binary decoder, (U195), is used for the counter U210. The 100 kHz reference is divided down to 10 kHz to provide the 10 kHz clock for U194A.

A and B Oscillator and Control (7)

This circuit contains the secondary (A and B) oscillators, the ÷40 counter for the B ÷ N loop, and the shapers for the oscillator sweep voltage. An exponential sweep from the shapers is applied to Varactor diodes CR172 and CR262 to linearize the oscillator frequency output. Shorting straps P122, P124, or P262, P260, are added or .removed to compensate for characteristic differences in the Varactor diodes and the inductors. The output sinewave from the oscillators is amplified and squared by two IC line receivers (U145, U260).

The A output of U260 is divided down by 40 through counters U270, U265A, and U265B. Their output is fed to the 1st LO lock circuit. The B output clocks the B + N circuit. The output of U145 drives the A-N and the 1st LO lock circuit.

The negative-going sweep voltage, from the Freq Span Attenuator, 'is on line 1A for Max Span, line 1B for 5 kHz/Div to 200 kHz/Div, and #2 swp for 2 kHz/Div to 50 Hz/Div spans. Sweep for the A oscillator (Max Span to 5 kHz/Div) is summed with A memory voltage at the input to operational amplifier U335. The output waveform is a positive-going ramp that drives the shaper circuit (U345 and U340). Its output waveform is shaped to produce a linear frequency shift out of the oscillator. Sweep for the B oscillator (2 kHz/Div to 50 Hz/Div) is inverted by U305A then summed with the B memory voltage at the input of summing amplifier U310. U310 and U325 shape the sweep voltage to drive the B oscillator.

The -11 volt Adjust (R365) sets the output of the operational amplifier to about 4.22 volts. This is Vcc for the two shaper IC's U325, U340. R365 also sets the current output of emitter follower 0365 which supplies the charge current for the shapers. The A Gain and B Gain adjustments (R345, R325) set the sweep amplitude and the frequency span of the oscillators.

1st LO/1st LO Lock 10

The 1st LO frequency is mixed with the A oscillator frequency in a double-balanced mixer (U225). The output is then fed through a 1 MHz low-pass filter (to remove the fundamental frequencies and upper sidebands) to a phase/frequency detector. The phase/frequency detector U230A, charge pump U230B, and operational amplifier 0230, U230C, comprise the phase comparator that is described in the block diagram description. Any difference in frequency between the A oscillator and the 1st LO is compared with the 40th sub-harmonic of the B oscillator in U230A and U230B and any phase lock error voltage is applied through amplifiers U230A, U230C to the 1st LO to correct its phase/frequency shift.

The oscillator (U2050) frequency is a function of voltage to Varicap diode CR2032. This voltage is the summation of; the phase lock error voltage, the pre-tune or main oscillator tune voltage (A oscillator plus 1/40th B oscillator frequency), and an offset voltage plus temperature compensation. The main oscillator tune voltage ramp (at pin WA) is added to an offset voltage out of U2030B at the +input of U2030A. The amount of offset is set by R2015 and the voltage across temperature compensating diodes CR2027 and CR2033. This voltage sets the center of the tune ramp voltage to the 1st LO. Sweep Gain adjustment R2025 adjusts the slope of the tune ramp voltage.

The oscillator output frequency is transformer-coupled through T2048 to push-pull amplifier 02060 and Q2065. The amplifier drives T2060 to provide single-ended output for the plug-in module and the feedback through P2060 to the mixer U225. Voltage regulator U2035 provides 5.1 V to the oscillator and the reference voltage for operational amplifier U2030B.

Reference Level, Readout, and Timeslot 11 and 12

Reference level, dynamic range, display mode, and crt readout of the amplitude characteristics are controlled by TEKTRONIX IC U2235. The REFERENCE LEVEL control outputs a two bit word to the control IC. The IC outputs a decoded word to a ROM which programs the signal attenuation through the plug-in module and establishes the gain for the IF video and amplifier stages in the 7L5. Front panel pushbuttons activate the vertical control IC U2235 and changes the output address data to the gain ROM U2265 to establish display mode and dynamic range. Column current, for the reference level readout, is supplied by the IC U2235.

The row and column current circuitry for the top left and bottom left crt readout is shown in Diagram 12.

The two bit word output of the REFERENCE LEVEL control drives the X,Y inputs to U2235. The IC decodes the direction and quantitization information from the word input and the decoded word drives the up/down counter that outputs an 8-bit BCD word to the ROM, U2265. The counter output is summed in an adder which drives a readout ROM to provide column current data for the readout circuit.

Offset current from the plug-in module, offsets the dBm/dBV readout to correlate with the plug-in module input impedance. The offset bit comes into offset pins as indicated at the top of the IC block symbol. The dBm/dBV switch, in the plug-in module, asserts a low for dBV and enables the gate U2225D. The output of the NOR gate drives pin 5 of U2235, plus two lines (one through inverter U2225A) for the plug-in module which establishes the offset data for the vertical control IC U2235.

The state of the 10 dB/2 dB line is set by the REFERENCE LEVEL control. When pulled out, the line goes high and selects 10 dB steps; pushed in, the line goes low and selects either 2 dB or 1 dB steps depending on the state of the line into pin 16 of U2235. The line to pin 16 is hard-wired in the plug-in module for one state or the other.

An oscillator (U2230A, U2230B) provides a 500 z clock to synchronize the switching information into the X,Y inputs.

When Lin mode is selected, a low is asserted at pin 9 of gate U2230C. The gate is synchronized to the 500 Hz oscillator by the flip-flop U2230C and D. When the output is high, the reference level is offset so the readout provides a scale factor in V/Div.

When power is applied, the initial reference level is +17 dBm for 50 0 plug-in modules. Q2310 ensures that the -15 V supply for the IC is delayed by the charge time for C2310, until the +5 V supply comes on.

The BCD output of U2235 is an 8-bit word. The 1 bit drives the 1 dB line and asserts 1 dB of gain change in the IF when low. Bits 2 through 80 drive the ROM U2265, which controls the gain and attenuation in the IF and plug- in module. The cross-over point of the reference level (point with no attenuation or gain data out of the ROM) is -30 dBm. Below this point, gain cells are added and above -30 dBm, attenuation is inserted in the signal path. Near the cross-over point, combinations of gain and attenuation are programmed (i.e., -31 dBm would require 4 dB attenuation and 3 dB of gain).

The -30 dBm reference level has a BCD value of 108 (80, 20, and 8) out of U2235. The LSD (least significant digit) of the word (A, of U2265) generates a value of 1, the next 2, 4, etc; to the MSD (most significant digit) of the word (A,) which is 128. Therefore; -30 dBm generates 84 (64 for A7, 16 for A,, 4 for A3). This input address of 84 produces a binary output word, from the ROM, of 11111011 (see Table 2-5). B4 output is inverted by U2245C to assert a low into the upper three NOR gates in U2250, inverted again through U2245D to assert a high into the lower three NOR gates in U2250. The upper gates of U2270 drive the gain cell lines, the lower gates the attenuators in the plug-in module. The 4, 16 and 32 dB lines are never used for gain and attenuation at the same time.

B_1 and B_2 drive the X10 and X100 gain lines for the Log/Lin amplifier. Therefore, with the -30 dBm binary word, no gain cells or attenuators are enabled. The highest sensitivity for Log 2 dB mode, using the 50 Ω plug-in module, is -128 dBm. This is 98 dB below the crossover point so the BCD output from U2235 is 10 dBm (108 to 198) thus only A_4, into the ROM, is high or a 1. The output address from the ROM is therefore 00101000 (see Table 2- 5) so the attenuator gates (U2250) are inhibited and the gain gates are enabled. This provides 16 dB plus 16 dB plus 4 dB (36 dB total) of gain. The low state of B_1 and$_2$ (U2265) provide an additional 60 dB of gain. This, with the -30 dBm, provides a reference level of -126 dBm. When the 2 and 10 bits are different, the bonding option output goes high. This produces an additional 2 dB of gain and -128 dBm reference level.

When the counter tries to step beyond the reference level range the input to Inhibit goes high. This forces a count up to the reference level limit. For example: The BCD for -129 dBm is one less than -128 dBm, so A_8 (8 bit) and A_1 (1 bit) are high. This address of 4 into the ROM generates an address of 11110100 at the output. The B4 low state inverted by U2245C, inverted again by U2245D, asserts a low into NOR gate U2320C. The other input to the gate (from Log 10 dB switch) is high for the 2 dB/Div mode. U2320C is an open collector IC with its pull-up resistor connected to the output of U2225C. The output of U2225C will be high when either input is low, depending on the B. and B2 state of U2265. The output high from the gates therefore invalidates the reference level and the counter returns to a count that provides -128 dBm reference level. The most sensitive position for the Log 10 dB/Div mode does not use the X10 or X100 lines; however, -71 dBm causes the B. output to go high which asserts inhibit. When switching from 2 dB/Div to 10 dB/Div, with a reference level below -71 dBm, inhibit is asserted until the counter counts up to a reference level of -70 dBm then both B_1 and B_2 go high to terminate inhibit. At the positive dBm end (+21 dBm) the counter for U2235 stops at 21 dBm.

When the Input Buffer is asserted, the input address to the ROM (A_8 of U2265) is increased by a factor of 128. The output address increases so that B6 goes low and 8 dB attenuation is asserted. The Input Buffer line also asserts a high (through the IF Mother board pin 21 of P1010) to one of the filter amplifiers and increases gain 8 dB.

TABLE 2-5

Vertical Control ROM U2265 Program

0-4	11110100	87	11110010	172	10001110
5-7	11110010	88-89	11100011	173-175	11110010
8-9	00101000	90-91	11010011	176	10001110
10-11	00111000	92	11000011	177-178	10011110
12	10101100	93--95	11110010	179	10001010
13--15	11110010	96	11000011	180	00011111
16	10101100	97--98	10110011	181--183	11110010
17--18	10111100	99--100	10100011	184--185	00001011
19	10101000	101--103	11110010	186--187	00011011
20	00111101	104-105	10010011	188	10001111
21--23	11110010	106--107	10000011	189--191	11110010
24--27	00101001	108	01110011	192	10001111
28	10101101	109--111	11110010	193--194	10011111
29--31	11110010	112--114	01100011	195-196	10001011
32	10101101	115--116	01010011	197--199	11110010
33--34	10111101	117--119	11110010	200--201	10011011
35	10101001	120-121	01000011	202--203	11001111
38	00111110	122--123	00110011	204	11011111
37--39	11110010	124	00100011	205--206	11110010
40--41	00101010	125--127	00000011	207	11110010
42--43	00111010	128--131	11010100	208	11011111
44	10101110	132	11110100	209--210	11001011
45--47	11110010	133-135	11110010	211--212	11011011
48	10101110	128--137	00001000	213--215	11110010
49--50	10111110	138-139	00011000	216--217	11000011
51	10101010	140	10001100	218--219	10110011
52	00111111	141--143	11110010	220	10100011
53-55	11110010	144	10001100	221--223	11110010
56--57	00101011	145--146	10011100	224	10100011
58--59	00111011	147	10001000	225-226	10010011
60	10101111	148	00011101	227--228	10000011
61--63	11110010	149--151	11110010	229--231	11110010
64	10101111	152-153	00001001	232--233	01110011
65-66	10111111	154-155	00011001	234--235	01100011
67--68	10101011	156	10001101	236	01010011
69--71	11110010	157--159	11110010	237--239	11110010
72-73	10111011	160	10001101	240	01010011
74-75	11101111	161-162	10011101	241--242	01000011
76	11111111	163	10001001	243--244	00110011
77--79	11110010	164	00011110	245--247	11110010
80	11111111	165--167	11110010	248--249	00100011
81--82	11101011	168--169	00001010	250--251	00010011
83--84	11111011	170--171	00011010	252--255	00000011
85--86	11110010				

Readout and Timeslot Decode: 12

This circuit pertains to the row and column current for the top and bottom left section of crt readouts. The top left reads reference level in dBm, dBV, or V/Div for Lin mode. If appropriate, reference level readout is preceded by a - sign for dBm or dBV readout. This may be preceded by a < or > symbol when the reference level is variable or not calibrated. The bottom left section reads resolution bandwidth in Hz or kHz, preceded by either 10 dB/ or 2 dB/ depending on the display mode. Row (2) and Column Data (2) currents drive the bottom left readout and Row (1) and Column Data (1) currents drive the top left readout.

Row (1) current for TS 10, 9, 8, 7, 3, 2, 1; row current (2) for TS 10, 9, 5, 4, 3; and Column Data (2) current for TS 10, 6, are set by the resistor matrix in R3000. Row (1) is asserted at pins 5 and 11, Row (2) at pin 13, and Column Data (2) current at pin 10. Column Data (1) current source, for all but TS 1 and 2, is the vertical control IC U2235 (Reference Level diagram). TS 3 column current source is pin 2 of U2235, with a dc offset set by 6.2 V Zener VR2292. TS 4-10 column current source is pin 3 of U2235 offset by VR2294. Table 2-6 shows row current and the characters generated with different column currents for all the time slots.

The Column Data (1) current for TS 2 writes either a < or > symbol. The current for this readout symbol is controlled by two FET's (02345, Q2350). When the Variable control is out of its CAL detent the Var line is high. Q2350 is biased off so column current (through R2352) generates a < symbol (voltage to R2352 is offset by CR2356 so resistor value is less than 75 k for 200 µA current). When Uncal is asserted, 02345 is biased on and supplies current through R2342 to TS 2 to generate the> symbol. If the VAR control is out of the CAL detent and Uncal is asserted, the current is greater than 1 mA. Current greater than 1 mA generates > symbol.

The bottom left section of the crt is a function of Row (2) Column Data (2) currents. Resistor matrix in R3000, in combination with the currents generated by the state of BW 1, BW 2, and BW 3 lines, set the currents for TS 10, 9, 8, 7, 6 (resolution). Time slots 1-5 Column Data (2) current is a function of the display mode lines to Q2320, Q2330.

If the resolution bandwidth selection is 3 kHz, BW 1 and BW 3 lines are high (1) and BW 2 line is low (0). This biases Q2370, Q2365, and Q2355 off so row current set by R2366, and column current set by R2364, generate K for TS 8. Two units of column current are added (by R2360) to two units from R3000 to TS 6 to generate 3. Since Q2360 is on, TS 7 is a skip; therefore, 3 kHz would appear in the readout.

TABLE 26
Row Current and Characters
(for Reference Level, Display Mode, and Resolution Bandwidth)

	TOP LEFT			BOTTOM LEFT		
TS	**Column (1)**	**Row (1)**	**Character**	**Column (2)**	**Row (2)**	**Character**
1		*400 µA	No Symbol	200 µA/NC	NC	1/SKP
2	200pA/1 mA	100 µA	</>/SKP	NC	NC	2/0
3	600 µA/NC	100 µA	-/SKP	NC	400 µA	d/SKP
4		---	0--9	NC	400 µA	B/SKP
5		---	0--9	NC	100 µA	/or SKP
6		---	0—9	200 µA/ 400µA	NC/	1/3
7	600 µA/NC	400 µA	d/SKP	NC	NC	0/SKP
8	700 µA/NC	400 µA	B/SKP	100 µA/ 600 µA	NC/300 µA	O/K
9	100 µA/200 µA 300 µA/NC	300 µA	M/w/n/SKP	500 µA	400 µA	H
10	200 µA/NC	400 µA	V/SKP	400 µA	500 µA	Z

*In TS1 Row (1) current Is switched depending on LIN or LOG readout.

Column current for TS 1-5 is a function of the resistor matrix consisting of R2320, R2322, R2324, R2330, and FET Q2320; or, R2332, R2334, R2336, R2338, R2348, and FET Q2330. Q2330 or Q2320 are switched on when Log 10 or Log 2 state is asserted.

When Log 2 display mode is selected, U2320D latches U2320A output low. This low turns 02320 on. The outputs of U2320D and U2320B latch high so Q2320 is switched off. This generates 2 dB/ for TS 2-5. When Log 10 display mode is selected, TS 1 and 2 change to generate 10 for 10 dB/ readout.

When Lin mode is selected, 02325 is switched on to provide additional Row (1) current to change the reference level readout to V/Div scale factor.

IF Processing Chain 13 through 18

As previously described in the block description, the "L" plug-in modules provide various input impedance selections such as; 50 Ω, 75 Ω, 600 Ω, and 1 MΩ. They contain relay actuated attenuators (4, 8, 16, 32 dB), a low- pass filter, some contain an amplifier (e.g., L3) and the 1st mixer. The output from the mixer is 10.7 MHz IF.

Referring to Ref Cal/ 10.7 MHz IF/ 2nd Mixer 2nd LO, Diagram 13, the 10.7 MHz IF from the plug-in module is applied through an input filter (A1000A2), and a 30 kHz bandpass filter (FL 1300) to an IF amplifier 01305 and 01325. The input filter is a matching network between the plug-in module mixer and the 30 kHz crystal filter. The crystal filter (FL 1300) has an insertion loss of about 3 dB and the amplifier a gain of 21 dB. The 2nd mixer input level, for full screen deflection, with no IF gain steps on, is about -20 dBm.

The mixer, a double-balanced type, combines the 10.7 MHz IF and 10.450 MHz from the 2nd LO for a 250 kHz IF. C1600 and C1604 are in parallel with the secondary and primary of T1600, T1602. Both capacitors affect filter tuning and are adjusted for flat (30 kHz) bandpass characteristics. The mixer diodes are matched. The low-pass filter, between the mixer output and the 250 kHz IF amplifier, terminates the output of the mixer so only the difference frequency of 250 kHz is transmitted to the 2nd IF amplifier.

The 2nd LO (U1500A) is a 10.450 MHz crystal-controlled oscillator, phase-locked to the 10 MHz master oscillator. The output of the 10.450 MHz oscillator drives a push-pull amplifier (01500, 01505) and the D input (through U1500B) of a flip-flop U1510B. The flip-flop is triggered by a 500 kHz clock signal which is derived from the 10 MHz master oscillator. The 10 MHz is counted down to 500 kHz and 100 kHz by U395. 10.500 MHz is the 21st harmonic of 500 kHz so when the 2nd LO is phase-locked, the output of U1510B will be 50 kHz. The 100 kHz is divided down to 50 kHz by U1510A and then the two 50 kHz signals out of U1510A and U1510B are applied to a phase detector U1535. Any error in phase or frequency produces a voltage out of U1535 which changes the capacitance of Varactor diode CR1504 and pulls the 2nd LO frequency into a locked mode with the master oscillator.

Because pin 14 of the phase detector U1535 is the input to an internal amplifier in the IC, an external amplifier Q1530 is used to raise the 50 kHz reference signal out of U1510A to a comparable level for the phase detector within U1535.

The 500 kHz calibrator output level is automatically adjusted so it is a 10 mVor -40 dBV signal source for the different input impedance selections of the plug-in module. This 10 mV is not the peak-to-peak value of the square wave output signal from the counter U395, but 10 mV as indicated by the spectrum analyzer. The peak- to-peak value would be 2.2 X 10 mV or 22.2 mV. The output voltage of the calibrator is a function of Q395 collector current through R394. This current, in turn, is a function of the voltage across R395. When the 500 kHz square-wave signal out of counter U395 is high, CR390 opens and the emitter current for Q395 is the current through R390. When the 500 kHz square-wave is low, CR390 turns on and diverts some of the current through R396. The amount diverted is proportional to the voltage across R396.

The output voltage of U750 sets the current through R396. For high impedance (1 MΩ) plug-in modules, pin P of J530 is open and the output of the amplifier is set by the Hi Z adjustment (R892) to about -4.65 volts. When a low impedance unit Is used, pin P of J530 is either grounded (50Ω) or very close to ground (75Ω has 2.05Ω). The amplifier gain raises the output voltage to about -9 volts and the current through R396 increases to maintain a constant 10 mV output across R394 and the low impedance (50Ω) load.

The 50 n Input Cal Level adjustment Rs95, calibrates the output level for a 50Ω load. It is used to compensate for differences between the emitter-base Junction of 0395 and the diode Junction for CR390.

The IF for the 2nd mixer is applied through a Balum transformer T1400, to the 250 kHz IF amplifier (Diagram 14). Signal ground for the amplifier (denoted by the special ground symbol) is isolated from chassis ground to reduce ground loops. The 250 kHz IF amplifier consists of four stages that provide 46 dB of gain steps plus at least 8 dB of variable gain. If the reference level is set to -29 dBm the output from this amplifier, for full screen deflection, is approximately 200 mV peak-to-peak, unless the INPUT BUFFER is on.

The 1st stage is a non-inverting operational amplifier (U1400C) with the feedback resistance a function of a photo-resistor IC, U1435. The resistance of U1435 is controlled by current drive from Q1420, which is con- trolled by the output level of a differential amplifier U1415. The negative input to U1415 is connected through a switch (U1410C) to either pin 12 or 13, depending on the state of the 1 dB line into pin 11. When pin 11 is high, the switch connects pin 13 to 14 and the drive to the negative Input of U1415 is a function of the VARiable (Reference Level) control. When pin 11 is pulled low by the 1 dB line the switch connects pin 12 to 14 and the gain of the stage increases a calibrated 1 dB. It is still a function of the VARiable control.

Reference level for the differential amplifier IS set by the plug-In module front panel AMPL CAL adjustment. The center arm of the VAR potentiometer (R45) connects to 045. When the front panel disable Is asserted, this line goes to ground which is the same as turning the VAR control fully ccw to the ground end. It also removes the > symbol that prefixes the Reference Level readout. Pin DN connects through interface boards to the plug-in module for additional gain compensation, if required in future plug-in modules.

The dc output voltage U1400C is connected to the +input of the differential amplifier U1415 to control the gain set by U1435 for the stage.

Gain Offset from the plug-in module is a dc level shift that changes the reference level scale factor from dBm to dBV or vice versa.

The 2nd stage consists of U14008 and the feedback loop through U1410A. A low state on pin 10 of U1410A connects pin 2 to 15 so the gain of the stage Is unity. Switching pin 10 to a high increases the gain of the stage to 16 dB.

The 3rd stage consists of U1400D and the feedback loop-through multiplexer U1450. The input data to A,B,C I of the multiplexer selects resistance combinations in R1455 to provide gain steps of 2 dB to 14 dB. For example; if input to pin A goes high, then pin 14 connects to pin 3. R_f for the operational amplifier is 1.007 k, R_i is 3.859 k for a gain of 2 dB. If A and B go high, pin 2 is connected to pin 3 and the gain is 12 dB.

The 4th stage consists of U1400A and the feedback loop through U1410B. Gain of this stage is either unity (pin 9 of U1410B low) or 16 dB (pin 9 high). If the Reference Level is set for -29 dBm, the output from this amplifier for full screen deflection is approximately 200 mV peak-to- peak when the INPUT BUFFER is not on.

Variable Resolution 15

The variable resolution circuit consists of four amplifier stages, each containing a crystal filter with variable bandwidth from 10 Hz to 3 kHz. Automatic bandwidth variation, as a function of span, is a feature of each stage. Gain compensation maintains a constant output level as the bandwidth changes. The signal level at TP1800 is about 2 V peak-to-peak for full screen display in 10 dB/div mode.

The lst stage consists of an operational amplifier driving the Input of a crystal filter. Gain Is about 14 dB. T1860 provides about a 4:1 current gain to drive the crystal in narrow bandwidth mode. Resonant frequency of the circuit is 250 kHz. Adjustment C1666, in series with the crystal, sets the resonant frequency of the crystal. Adjustment C1660 neutralizes the effects of crystal parallel capacitance and is adjusted for response symmetry at 20 dB down.

A parallel resonant circuit, at the output of the crystal, consisting of L1680, C1660, plus stray circuit capacitance to ground, is tuned to a center frequency of 250 kHz. The Q of the circuit determines the 3 kHz bandwidth response. R1680 sets circuit Q. It is adjusted so the bandwidth of this stage (at 1.2 dB down) is about 3 kHz when the resolution bandwidth is set for maximum. The output load for the

crystal and consequently the bandwidth of the filter is determined by the shunt load of the photo-resistor-LED IC U1690 in series with gain adjustment R1685 The resistance of this photo-resistor determines the actual operating bandwidth of the stage. Resistance varies from about 200 k at maximum bandwidth to about 250 0 for minimum bandwidth. The resistance of the photo-resistor is a function of the current through its LED, which in turn is set by the front panel RESOLUTION control or the automatic resolution circuit.

As the resolution bandwidth decreases, the load on the crystal filter decreases the output voltage by an amount that is proportional to the current through Q1690 and R1685. This generates a compensating current out of Q1680 that is summed with the output current of Q1670 to maintain a constant input drive current for the second operational amplifier stage Q1710, Q1720 Gain from the 1st to the 2nd stage is determined by the ratio of R1728 to R1674, so the drive level to the next crystal is a 2 V peak-to- peak signal for full screen deflection in the 10 dB/Div mode.

As previously stated, the bandwidth is controlled by changing the current through the LED's for the photo-resistor IC's. The resistor part of the IC forms one leg of a bridge circuit. The LED is driven by the output from an operational amplifier across the leg of the bridge (see Fig. 2-4). Q1690 is the voltage source for the bridge. The multiplexer, U1700, selects the resistance for the one leg in accordance to the input binary code from the front panel RESOLUTION switch. Any unbalance across the bridge produces an output from U1680 to increase or decrease the current through the LED. This, in turn, changes the resistance in the IC and balances the bridge.

The multiplexer U1700 selects resistance values for bandwidths from 10 Hz through 1 kHz. When 3 kHz is selected the current through the LED is shut off, the bandwidth is determined by the resistance of R1680 (3 kHz BW Adj).

Transistor Q1830 provides the isolation between the VR circuit and the post VR amplifier. It provides gain compensation. The output is normalized, by R1835, at approximately 1 V peak-to-peak for a full screen display at 10 dB/div.

As previously explained in the function block description, 10 kHz and 30 kHz resolution circuits bypass this circuit. They are shown in Diagram 16. When either is selected, the output of U1000 or U1002 goes high, which, activates the respective 10 kHz or30 kHz bandpass filters. With 10 kHz or 30 kHz resolution, the input to an OR gate (composed of CR1812, CR1813) goes high. This turns Q1813 on and 01810 off. Current source for the output amplifier 01830 and the -15 V_4, -15 V_5 power supplies is Q1810 so, this effectively turns off all stages except the input amplifier to the VR circuit.

Q1765 is switched off when the Input Buffer switch (on the plug-in module) is turned on. The gain of this stage is, then increased 8 dB to offset the added 8 dB of attenuation through the plug-in module.

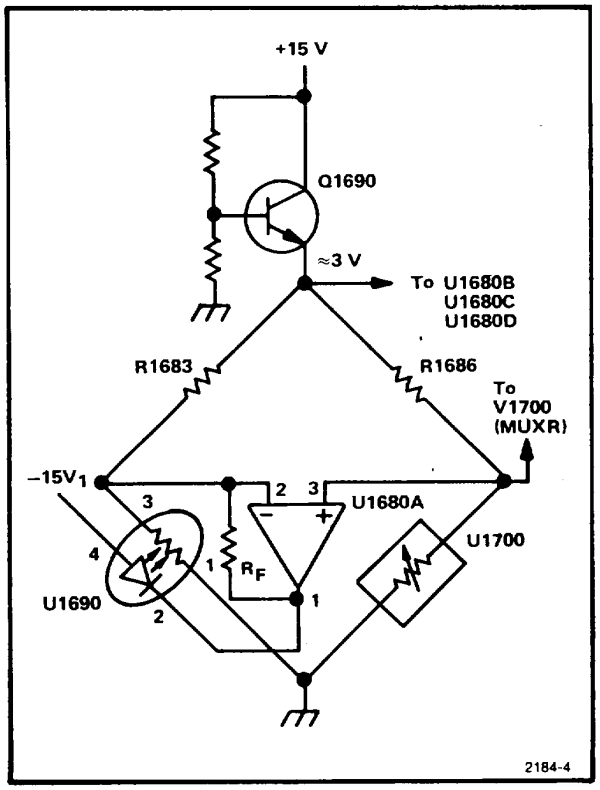

Fig. 2-4. Simplified diagram of the resolution circuit for the 1st stage.

10 kHz and 30 kHz Filters and Post VR Amplifier 16

When 10 kHz or 30 kHz resolution is selected, the 10 kHz or 30 kHz line (pins EP, EN) goes high (-15 V to O V) This high, switches either Q1890and Q1900 (30 kHz) or Q1855 and Q1880 (10 kHz) on, and connects the 250 kHz IF signal from T1666-6 through either the 10 kHz filter (C1856/L1856 through C1878/L1878) or, through 01900 to the amplifier 01910 and the 30 kHz filter. A low on the 30 kHz line switches 01890 and 01900 off and Q1895 on, to bypass the stray **rf** signal to ground through C1896. A low on the 10 kHz line switches Q1855 and 01880 off and Q1850 on, to bypass rf signals to ground through C1859.

Gain of either the 10 kHz amplifier (Q1800) or the 30 kHz amplifier (Q1900) is a function of their collector load, which consists of R1888, R1914, and (when Q1885 is on), P1887. When the INPUT BUFFER is switched on, the output of U1002A goes low. This turns Q1885 off and removes R1887 as part of the collector load, thus, increasing the gain of the 10 kHz or 30 kHz amplifiers to offset the 8 dB loss through the front end attenuators.

Log/Lin Amplifier 17

This circuit provides an 80 dB dynamic window for the 10 dB/Div display, 16 dB window for the 2 dB/Div display, or a linear display for Lin mode. It consists of an input amplifier and four similar amplifier stages that provide linear or logarithmic gain characteristics. The non-linear or log gain characteristic (for the 10 dB/Div or 2 dB/Div mode) is produced by a gain-shaping transistor-diode array consisting of transistor-diode pairs connected across the Input resistance to the current summing point of an operational amplifier. As the signal level increases, the gain-shaping array decreases the amplifier gain at an exponential rate. In addition to the gain-shaping network, the gain of the first three stages (in the LIN or 2 dB/Div mode) can be increased in 20 dB increments by switching a FET transistor on, to shunt the input resistance of the operational amplifier with a 20 dB gain setting resistance.

The first non-linear amplifier stage is an operational amplifier consisting of U1090E and Q01115 with a gain- shaping network across the input resistance (R1076, R1090B) to the current summing point of the amplifier. The log-shaping circuit is an array of three transistor- diode pairs (Q1080-Q1085, Q1090A-Q1090B, Q1090C- Q1090D) connected so the input signal level, to one pair (set by R1080, R1090E, R1090G), is 10 dB below the other. The transistor-diode pairs (current limiters) are conducting at low input signals signals levels to shunt the input resistance (R1076, R1090B) with about 200 Q/pair Gain of the stage is 20 dB As the signal level increases, the gain decreases at an exponential rate until Q1080 clamps and the first break point of the log gain slope is reached. The gain now equals 10 dB. A further increase in signal decreases the gain until Q1090A clamps and the second break point of the gain slope is reached The gain is now unity. This continues .to decrease until the third break point is reached when Q1090C clamps and the gain is reduced to -10 dB.

The stages limit sequentially starting with the last stage. In the 10 dB/Div mode, the log-shaping arrays for the four stages are activated by pulling Log 10 line (pin 24 of J1010) low. The Lin line (pin 23 of J1010) is high. In the 2 dB/Div mode only the last log-shaping array is activated because both the Log 10 and the Lin lines are high. The high on Lin line is inverted by U1002D and pulls pin FF low.

In the LIN mode, all of the log-shaping arrays are disabled because the Log 10 line is high and the Lin line is pulled low. This low on the Lin line produces a high at pin FF which switches 01170 on, to increase the gain of the last stage about 24 dB. This gain offsets the loss through the 1st stage and sets the nearest dBm/dBV deflection factor value to the equivalent mV/Div factor for the LIN mode.

Gain of the first three stages is switched in 20 dB increments (in the LIN and 2 dB/Div modes). Gain switching logic comes in on the $\overline{X10}$ and $\overline{X100}$ (pins 3 and 20 of P1010) lines. A truth table is shown on the diagram for the three gain cells.

Detector and Video Amplifier 18

The signal from the function (log-Lin) amplifier is coupled to the detector circuit through a low Q single-pole filter network with a resonant frequency of 250 kHz (L1220-C1222). This filter narrows the noise bandwidth from the Log/Lin amplifier. A precision detector, consisting of an operational amplifier and a diode feedback circuit, converts the IF signal to video. Input series resistors R1220, R1224, convert the input signal voltage to a current at the input summing point of the operational amplifier. The ac feedback for the amplifier is through the diode-resistor network CR1252-R1250, or CR1240-R1242. The dc feedback path is through R1241 and R1240.

The output of the detector is a signal with negative- going peaks which is applied through a low-pass filter (C1254, L1254, C1256) with a pass-band of 15 kHz. The filter averages the video signal and further reduces the IF component. The signal is then amplified by U1050A, U1050B, and applied to operational amplifier U2210.

The amplifier U2210 allows only a negative swing at the output, therefore, this stage establishes the display baseline. The level of the signal above the baseline is set by Volts/Div Cal R2205 which is set so a 10 dB change at the input of the Log amplifier produces 1 volt of change at the output of U2210. 02225 is switched off to provide the X5 gain required for the 2 dB/Div mode so the output of U2210 is 1 volt change for 2 dB change at the input. The baseline for the LIN mode is set with R2235. The baseline for the two log modes is then set with R2215 and R2225.

The Vertical Out signal of U2210 is applied through the front panel to the vertical display processing circuits and to amplifiers U2205A, U2205B. These amplifiers provide the Video signal to the front panel VIDEO OUT jack and the internal triggering circuits of the mainframe.

DISPLAY PROCESSING

This portion of the description deals with Horizontal and Vertical Display Processing, the Average Calculator, Digital Storage, and Z Axis Logic and Dot Switching (Diagrams 19, 20, 21, and 22). Before reading this portion, review the display processing block diagram description.

Horizontal and Vertical Display Processing 19

This circuit processes, the vertical and horizontal data from either the digital storage circuit or the vertical out signal from the video output amplifier, and the sweep ramp from the sweep generator (Diagram 17). The Dot position- ing is also summed with both the vertical and horizontal information. Horizontal sweep is provided to the front panel HORIZ OUT jack J98.

The video portion, on the Vertical Out line, is a 0 to -8 volt signal that is applied through R735 to the digital storage circuit on the Swp Vert line, and through U735B to one input of switch U735C. If an overspan occurs, pin 10of U735B is pulled low and switches the common output (pin 15) of U735B to a dc level set by CR737-R840. This dc level provides a baseline reference for the display.

When $\overline{\text{Store}}$ line is low (true) the video data on the Store Vertline (from digital storage) is applied through U735C to the operational amplifier U750B. When the Store line is high (false) U735C switches and connects the Vertical Out signal from U735B to the input of U750B. Log Cal (R95) is part of the input resistance to the operational amplifier U750B and is adjusted to compensate for gain differences between 7000-Series mainframes.

The gain of U750B is about 0.5. Its output is clamped at 0 V so the signal amplitude out, varies between 0 and about + 4 volts. If $\overline{\text{Dot}}$ line is high (false) Q765 is on and the output of U750B is connected to the input of operational amplifier U730D. The dc level of the VERT POSITION (R755) control, summed with the vertical signal at the input to U730D, provides display positioning. The output of U730D then drives an inverting amplifier U630C and provides the negative-going portion for a push-pull vertical output signal to the mainframe.

The sweep ramp from the sweep generator (Diagram 6) is applied through R731 to one input of U735A and out, on the Swp Horiz line (pin HF), to the digital storage circuit. U735A selects either $\overline{\text{Store}}$ Horiz (synthesized sweep from digital storage circuit) when Store line is true or the analog sweep ramp at pin 3 when Store is false. The selected sweep is then applied through FET 0735 (when Dot is false) to input of U730A and a current summing point at the input to U690B. The output of U690B drives the A sweep for the mainframe and provides a 0 to -6 volt ramp for the front panel HORIZ OUT jack. The selected sweep (Store Horiz or Swp Horiz) is amplified by U730A and its output provides the + Horizontal sweep. The ramp is inverted by U730B to provide the negative-going sweep ramp for the mainframe. Gain of U730A is adjusted by Swp Cal (R750) to compensate for mainframe differences in sensitivity.

When $\overline{\text{Dot}}$ line goes low (about -7 volt) 0765 and Q735 are switched off. Dot position information (from U685B, Diagram 6) is now applied to the input of operational amplifier U730A. The vertical dc level is supplied from the VERT POSITION control. The sweep ramp also contains Dot information. The polarity of the dot position information (from U685B) nulls the dot position information riding on the sweep horizontal and the sweep to the HORIZ OUT jack. When the Dot is displayed the sweep horizontal plus dot information is switched off and only dot position information from U685B is applied through R734 to the null point of amplifier U730A.

Average Calculator (20)

An average or quotient is the summation of words of vertical data (numerator) divided by the number of words taken (denominator). The Average Calculator circuit accumulates data from the vertical A/D converter and divides this by the number of words taken within an averaging period. At the slow sweep rates as many as 216 words can be accumulated and averaged.

The accumulator for vertical data (numerator) is located in the upper portion of the diagram. The number of words (denominator) are counted by two IC's (U4125, U4120) in the lower left portion. The dividing process (accumulated data divided by the number of words) is performed by circuitry comprising three shift registers (U4100, U4000, U4105), two adders (U4005, U4010) and the NAND gate U4110B. The Average Calculator circuit also includes; a peak detector (U4065, U4060, U4075A, U4075C, U4070A, U4155A), a Max Hold (U4170, U4175, U4055C, U4055D, U4075D, U4155C), and a 3 to 4 MHz oscillator (U4080B).

Three lines (Start Divide, Memory Data, and Write Cycle) from the digital storage circuit go through level shifters (U4085B, U4080A, U4085A) to raise the logic level to a high of +15 volts.

The shift registers for the vertical data are clocked by Sync Clock. The counter for the denominator (number of words) is clocked by Sync Pulse. Sync Clock is generated by AND'ing EOC (positive pulse every 9 /s) with 1 MHz clock. It is a 1 /is clock with every 9th pulse missing. Sync Pulse is generated by AND'ing EOC with 1 MHz In NAND gate U4180C. It is the missing pulse from Sync Clock which occurs every 9 us and is essentially the same as EOC.

The denominator accumulator is a synchronous 16 bit counter (U4125, U4120) that accumulates the number of sync pulses within an averaging period. It is reset by the leading edge of Start Divide.

Numerator data, in serial form on the Data Out line, is clocked by Sync Clock (1 MHz) into the shift register U4035. This 8 bit word appears at the input of two 4 bit adders (U4040, U4045) where it is summed with the previous summation in latches U4145, U4150. The LSB's of the two words are summed in U4040 while the MSB's are summed in U4045. The carry (or 9th bit) is entered into overflow counters U4135, U4130. (Initially the 8 bit word out of U4035 is added to 0.) The sum (AIB1, A2B2, etc.) is r latched, on the positive excursion or end of Sync Pulse, to the output of the latches U4145, U4150, where it is summed in U4010 and U4045 with the next 8 bit word out of U4035. This accumulation process continues for one horizontal window (512 increments per sweep).

Start Divide, out of level shift amplifier U4085B, triggers a one shot multivibrator U4160A. The 0 output (at pin 6) then parallel loads the accumulated numerator data into 8 bit shift registers (U4140, U4030, U4025). These three registers provide 24 bit capacity. The Q output of U4160A also loads the accumulated word count into the denominator shift registers U4020, U4015.

At the termination of the pulse out of U4160A the positive excursion from $\overline{Q}$ triggers a second one-shot multivibrator U4160B. The output of this one-shot resets the latches (U4145, U4150) and counters (U4135, U4130, U4125, U4120) in the numerator and denominator accumulator circuits. The $\overline{Q}$ output clears the denominator register (U4100) in the divide circuit. At the beginning of Start Divide the data in the counters is loaded into shift registers. As soon as one-shot U4160A times out, the latches and counters are reset. They are now ready to start accumulating new data while the old data in the numerator accumulator is divided by the accumulated word count in the denominator.

When U4100 is cleared, pin 13 goes low. This switches the multiplexer (U4115) to the A inputs (1_A, 2_A, 4_A). A free running 3 to 3.5 MHz oscillator (U4080B) provides a justify left clock signal. The clock shifts the accumulated word count in the numerator and denominator registers to the left (right on the diagram) until the MSB of the denominator (or 1) arrives at pin 13 of U4100. A high at the select input to multiplexer U4115 switches the fast clock off and 2_Q (pin 7) of U4115 connects to Sync Clock input at 2_{B-1} (pin 6).

Shift register U4100 now holds the justified denominator word until cleared again by the output of one-shot U4160B. Write Cycle enables NAND gate U4110C and Sync Clock pulses are gated to input 2_B or U4115. These clock signals out of 2Q (pin 7) shift the data in the numerator registers and clocks the vertical information into the dividing circuit to perform the division.

The divider consists of 4 bit adders (U4005 and U4010) shift registers (U4000 and U4105) and NAND gate U411 OB. Division is performed by adding the complement of the binary numbers for the numerator to the divisor (denominator) in a parallel serial fashion, with the quotient being the carry out of the adder (division by the complementary method).

Table 2-7 illustrates the process using 25 (1101) and 5 (101) as the numerator and denominator. Before the number is justified, pin 5 of U4020 has the MSB of the number 101, and pin 13 of U4140 has the MSB of the numerator 11001. Since the denominator is moved 21 counts to position in U4100, the MSB of the numerator would move to Q2 of the shift register U4000. The 0 line in Table 2-7 denotes the initial state for the division process. When the quotient (output of U4110B) is 0 (low) a shift function is performed by the registers (U4000, U4105) for the numerator. When the quotient is a 1 (high) the registers parallel offset load the present summation.

The output from this circuit is an 8 bit serial word representing the average vertical value for that particular address. The output is applied to gating circuits and gated to the Math line for the storage circuits.

The peak detector consists of a multiplexer circuit (U4060A, U4075A-B-C) and gates (U4065A through C). The circuit detects and selects the peak value from two data lines, either data on the Data Out line or data that is contained in an 8 bit register U4070A depending which is the higher. The selected data is then gated back into the register for the next comparison and to another multiplexer (U4050B, U4055A, U4110A) that selects the peak or average data value from the averaging circuit. The peak or average is selected by the setting of the Peak/Average cursor. The output signal goes to Digital Storage circuit on the Math Out line.

Write Cycle sets flip-flop U4060A to enable U4075C. Data will now pass through into U4070A for one cycle. This establishes an initial data value in register U4070A for comparison with new data so the peak can be selected. At the end of Write Cycle, the positive 1 µs EOC pulse clears both flip-flops and Q goes high. This high enables U4075A and U4075C so data in shift register U4070A and data on the Data Out line can be compared. The high bit sets either U4060A or U4060B and inhibits the least word from passing into register U4070A. At the end of the word, the flip-flops (U4060A, U4060B) are preset by EOC and the stored word in U4070A is again compared with the word on Data Out line.

The output of the peak detector is applied to another multiplexer consisting of U4050B, U4055A, U4110A, and U4055B. The D flip-flop U4050B is set by a high on pin 8 or reset by the clock input when Write Cycle ends When the Peak/Average line is high, the Q output of U4050B is high and data from the peak detector is gated through U4055A, and U4055B to another multiplexer When the Peak/Average line goes low, the multiplexer selects the output from the averaging circuit.

The comparator (U4576B, Diagram 21) that drives the Peak/Average line uses pull-up resistor R4129 (pin 10 U4155D) During Write Cycle the output of U4155D is low, therefore, the state of U4150B cannot change while data is written in memory.

The output of the NOR gate U4055B is applied to another peak detector where it is compared, if Max Hold Is enabled, with the data in memory (on the Memory Data line). The peak of the two is then gated through U4075D to the Math Out line. Data in memory is read during Start Divide which occurs one cycle or 9 µs before Write Cycle. The data on Memory Data line is delayed this 9 µs by processing it through a D flip-flop (U4050A) and shift register (U4070B) Memory data is shifted out of U4070B by the next Sync Clock pulse and it is then compared by the peak detector (consisting of U4170A and B, U4175A and B, and U4055D and C) to the data from U4055B The peak (from memory if Max Hold is enabled or data from U4055B) is then gated through U4075D onto the Math line Operation of this detector is the same as the peak or average detector described previously.

Digital Storage (21)

The description for this circuit is grouped into the following main sub-sections; derivation of the conversion clock pulses, vertical acquisition, horizontal acquisition, memory, vertical display, and horizontal display The digital storage circuit digitizes vertical and horizontal analog signals, writes the information at a horizontal address in memory, then at a different rate, reads data from memory and converts this back to analog information for the display processing circuit. A display control circuit selects the sequence of display The first two sweeps consist of data from memory, the third the cursor.

TABLE 2-7

DIVISION PROCESS FOR 25 ÷ 5
IN AVERAGE CALCULATOR

After 11001 has been justified left

		U4025							U4000				U4105				
0		Q_{LSB}	Q_0	Q_0	Q_0	Q_0	Q_0	Q_{MSB}	Q_1	Q_2	Q_3	Q_4	Q_5	Q_6	Q_7	Q_8	
		0	0	0	0	0	1	0	1	0	0	1	1	1	1	1	
									(1)	(2)	(3)	(4)	(5)	(6)	(7)	(8)	(CARRY)
1								Numerator (A)	1	0	0	1	1	1	1	1	1 Quotient (U4110B)
	U4100							Denominator (B)	0	0	0	0	0	1	0	1	0 (MSB)
	U4005, U4010							Summation (Σ)	1	0	0	1	1	0	0	1	1 shift
2								Numerator (A)	1	1	0	0	1	1	1	1	1
								Denominator (B)	0	0	0	0	0	1	0	1	0
								Summation (Σ)	1	1	0	0	1	0	0	1	1
3								Numerator (A)	0	1	1	0	0	1	1	1	1
								Denominator (B)	0	0	0	0	0	1	0	1	0
								Summation (Σ)	0	1	1	0	0	0	0	1	1
4								Numerator (A)	1	0	1	1	0	0	1	1	1
								Denominator (B)	0	0	0	0	0	1	0	1	0
								Summation (Σ)	1	0	1	1	0	1	1	0	1
5								Numerator (A)	1	1	0	1	1	0	0	1	1
								Denominator (B)	0	0	0	0	0	1	0	1	0
								Summation (Σ)	1	1	0	1	1	1	0	0	1
6								Numerator (A)	1	1	1	0	1	1	0	0	1
								Denominator (B)	0	0	0	0	0	1	0	1	1
								Summation (Σ)	1	1	1	0	1	0	1	1	0 latch
7								Numerator (A)	1	1	1	1	0	1	0	1	1
								Denominator (B)	0	0	0	0	0	1	0	1	0
								Summation (Σ)	1	1	1	1	0	0	1	0	1
8								Numerator (A)	1	1	1	1	1	0	1	0	1
								Denominator (B)	0	0	0	0	0	1	0	1	1 (LSB)
								Summation (Σ)	1	1	1	1	1	1	1	1	0

The master clock for acquisition, storage, and display process, is 1 MHz (1 us), derived from a 2 MHz sub-frequency of the master 10 MHz oscillator. The 2 MHz frequency comes in at pin YA and is divided down to 1 MHz by U4510A. The vertical A/D converter, U4504, U4506, is clocked by 1 MHz signal. Every 9th pulse (9 µs), EOC is sent out to trigger the flip-flop U4510B which generates a true EOC and Clock Enable. EOC is gated, in the Average Calculator with a 1 MHz clock signal to generate Sync Pulse and Sync Clock. Sync Pulse is coincident with EOC and Sync Clock occurs at 1 µs intervals with +he 9th pulse missing (see Fig. 2-5).

Vertical information on the Sweep Vert line (pin GH) is fed through buffer amplifier U4522B to an A/D converter consisting of; a successive approximator U4506, digitally controlled current generator U4504, and comparator U4508A. The converted data goes out on the Data Out line to the Average Calculator diagram where it is averaged or peak detected and comes back through U4578A into memory on the Math line.

Video signal into buffer amplifier U4522B produces a current through R4528 and R4529 that is proportional to the signal amplitude at pin HG. This current produces a positive voltage at the input to comparator U4508A and its output switches high. The successive approximator U4506 counts up until the converted 8 bit word produces an output current out of D/A converter U4504 equal to the current through R4528. On the 9th clock the word is loaded into the register, U4506, and EOC triggers the D flip-flop U4510B as described previously. The converted digital word then goes out on Data Out line during the next conversion cycle.

Horizontal information comes in on the Sweep Horiz line (pin HF) as a 10 volt ramp, offset between a maximum and minimum value of +10 V and -10 V, depending on the dot frequency position. The 10 volt sweep ramp is digitized by a continuous or ramping A/D converter (resistor ladder U4560) and two comparators (U4564A, U4564B). The sweep horizontal signal comes in pin HF to a node point of two comparators, offset from each other about 20 mV. This sweep ramp is summed with the output from the D/A converter whose output is opposite in polarity and slope. If the sweep voltage exceeds the converter output by 20 mV, U4564A switches high; or, if the converter output is the most positive, U4564B output switches high. When the two ramps are within 20 mV of each other the output of the comparators is low and the counter holds a constant value. The direction (up/down) of the count is determined by which comparator output is high. The 20 mV window between the two comparators keeps them from toggling.

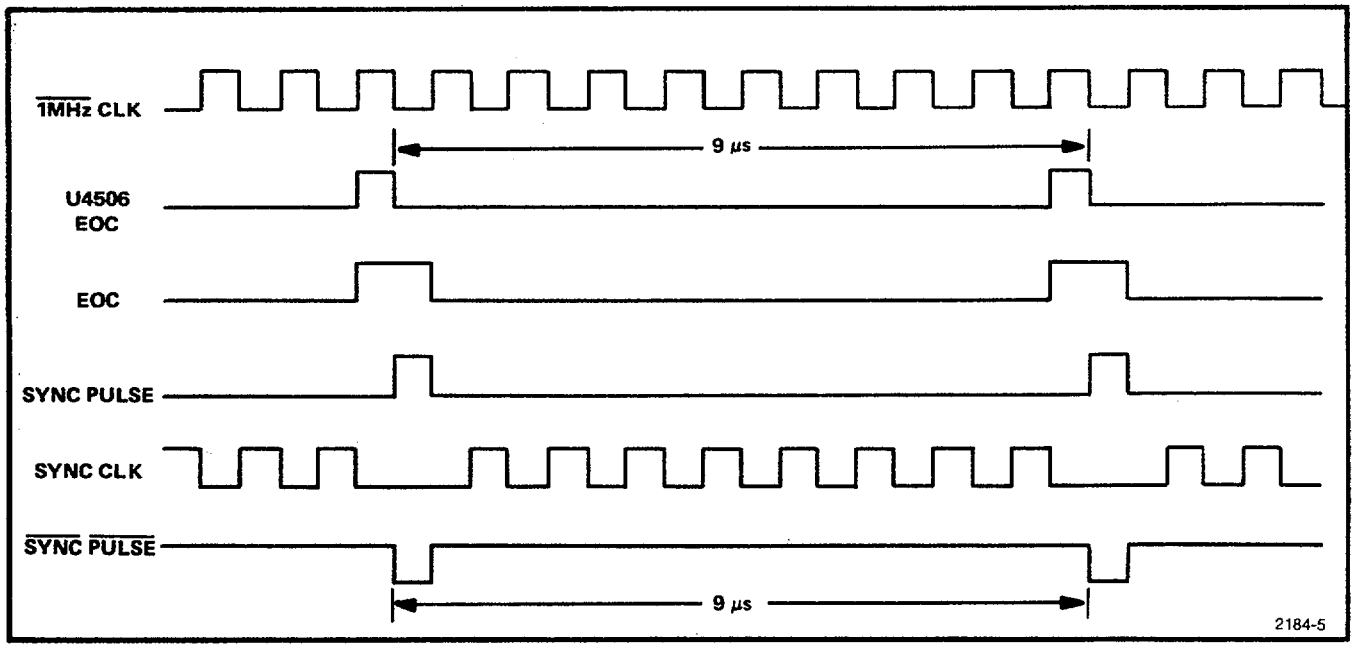

Fig. 2-5. Timing sequence of conversion pulses.

The D/A converter (resistor ladder U4560) output is a 0 to +5 volt stairstep ramp applied to a gain-of-two amplifier and offset an amount equal to the offset of the incoming Sweep Horizontal ramp at pin HF. If all the bits into the D/A converter U4560 are 1 (high), the output is +5 volts. This +5 volts at the + Input to U4540A generates an output current through R4585, R4582, and R4572 proportional to the offset and amplitude between the Input Sweep Horizontal and the +5 volt out of the converter. The common input to the comparators U4564A and U4564B is the node or 0 volt, therefore, since the resistance of R4572 is twice that of R4582 and R4586, a +5 volt output is offset by -10 volts at pin HF. When only the MSB of the word is 1, the converter output is +2.5 volts. The output of U4540A is 0 volt (current through R4588 equals current of R4586). The sweep horizontal input voltage at pin HF is, therefore, 0 volt. When the output of the converter is 0 volt, the output of U4540A is -5 volts so the input voltage at pin HF is +10 volts.

The counter output is a 10 bit word with the LSB for the horizontal address at pin 3 of U4562 and the MSB at pin 2 of U4580. 512 of the 1024 bits (discrete locations) are used to cover the screen width, the remaining 512 bits are divided so 256 locations are on either side of the screen. Since the frequency dot can be moved across the display (screen) and it always represents 0 volt and location 512, the distribution of the 512 locations within the screen width is in accordance to the dot position. If the dot is at the left edge of the screen, location 511 is at the right edge and 512 and 0 are at the left edge. Moving the dot to center screen distributes the locations so 255 locations are either side of location 512. Moving the dot to the right edge shifts location 1 to the left edge and location 511 to the right edge.

The MSB for the horizontal address is the offset data that determines the dot location on the display, The remaining 9 bits provide the address in memory and 512 discrete locations across the screen. Each location or step is 1/512th of the 10 volt sweep ramp or about 20 mV. This is the hysteresis window for comparators U4564A and U4564B.

When the horizontal acquisition counter needs to count up (during the sweep ramp period for Sweep Horizontal) the output of comparator U4564A goes high. This enables flip-flop U4530B so Sync Pulse clocks U45308 to assert Start Divide (see Fig. 2-6). The next Sync Pulse clocks U4530A and Write Cycle is asserted during which data is written into memory. At the end of Start Divide and Write Cycle the horizontal acquisition counter counts up. The screen then refreshes until the next horizontal count occurs. Since each horizontal increment requires three 9,us periods, a total of 15 ms (512 X 27,us) minimum is required for each horizontal sweep or2 ms/div or slower Is required to acquire with digital storage.

During retrace time the output of U4564B switches high and enables the NAND gate U4566D so Sync Clock pulses can ripple the counter down in a short period.

When Start Divide is asserted, the horizontal address is latched into U4584, U4586, and U4564B; then during Write Cycle the vertical data on Math line is written in memory at that horizontal address. Memory consists of two RAM's U4598 and U4596. The vertical memory (U4598) is a serial memory operated by a 3 bit counter U4558A. The counter is run by Sync Clock and its output 3 bit word shifts data in and out of memory. The horizontal RAM is U4596. The offset data bit (MSB of the horizontal address that signifies the dot position) is fed into the RAM on the Left/Right line. The LSB of the horizontal address, into pin 5 of U4598, selects the section (A or B) for writing or reading the vertical data in memory. One mode of store operation updates each section of memory every cycle, the other mode, when Save A is asserted, saves data stored in A section and updates only the B section. When Save A line is high, U4514C is inhibited so the input to pin 5 of U4598 (memory) is held low during Write Cycle and prevents data from being written in A memory. The Save A line is switched high when the front panel SAVE A button is pushed. This switches the latch U10A, setting Q output high. When the button is again pushed, the latch switches back and the output goes low to inhibit Save A mode.

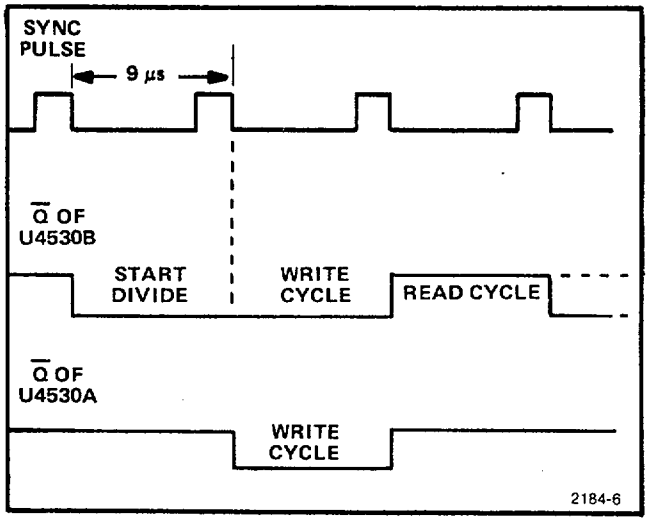

Fig. 2-6. Sequence of events for horizontal increment.

Memory is ready to be read after Write Cycle when U4530A is reset and Q goes high or EOC (Hold B) is asserted. Data is clocked into register U4550 (part of the vertical output D/A converter) for one sync pulse period (9 µs), allowed to stabilize for 8 µs, then a sample and hold circuit is gated on and the analog output of U4548 is sampled and stored on C4553. The sample of new data is, inverted and summed with a sample of present or old data from the output of an integrator. The difference or summation is then integrated to become the new signal position.

If the signal from the D/A converter was applied to the vertical output without the integration process, the display would be a series of dots. The integrator is used to integrate from dot A to dot B position.

EOC out of U4506 clocks a divide-by-two flip-flop (U4554A) to produce an output pulse with a time period of 9ps. During the time WCQ1 line and the Q output of U4554A are high (data is not being written into memory) the gate U4534A is enabled and Sync Clock (1 us pulses) clocks data into U4550. During the next Sync Pulse period, data in the register U4550 is converted to analog information and EOC is gated through U4566C to the select input of multiplexers U4544A and U4544B. The capacitor C4553 now charges to the new data (voltage output from buffer amplifier U4546B) through U4544A. Coincident with the sample taken by C4553, C4561 is charged through U4544B to the present or old data out of integrator amplifier U4525B. The new data on C4553 is applied through buffer amplifier U4524A and inverter U4524B to the input of integrator U4525B where it is summed with the non-inverted sample on C4561. The voltage differential between the updated and current voltage seen by the integrator is proportional tothe analog voltage change out of U4548. The output of the integrator is then applied through mulitplexer U4544C to the vertical output amplifier. Each integration takes 18 /s then a new sample is taken and the process repeats.

Multiplexer U4554C is driven by a ring counter, consisting of U4558B and U4556C (above the horizontal output amplifier). The countercounts0, 1,2; 0, 1,2; etc. On the count of 2 (10) the multiplexer U4454C selects the cursor input (pin 13). Sequence of the display is B, A, cursor; so the cursor is displayed every third sweep.

The horizontal output circuit consists of an 8 bit counter (U4590), two latches (U4572, U4568), a D/A converter (U4570), and display control circuitry above the horizontal display circuit. The counter is clocked by the output from the display logic circuit which is programmed by front panel Display Mode push buttons (DISPLAY A, DISPLAY B, and SAVE A). During read cycle (Q output of U4530B low) the output of the display counter (U4590) is connected through U4588A and U4592A to drive the memory RAM. With the counter at some horizontal address, the vertical output sequence is executed then U4590 is clocked through U4588B or U4592B (depending on the display mode) and another vertical output sequence is executed.

When Hold B line goes high the horizontal address for one word of data is clocked through the latches U4568, U4572, to the D/A converter U4570. Over the period of one sweep (512 increments) the output of U4570 is a +5 volt stairstep ramp which is smoothed and amplified by U4546A, U4540B. The output signal of U4540B is a negative going 10 volt sweep for the display processing circuits on Diagram 19.

There are four basic modes of store operation; Display A, Display B, Display both A and B, and Save A with either/or both Display A Display B. The LSB determines which section data is read out of or into memory. A LSB of 1 reads or writes in the A section and 0 of the B section. When Save A is selected, data in A memory is not updated during the Write Cycle because the LSB into the RAM is 0. Only B memory is updated. The display when either Display A or Display B is selected is 512 increments of data from the memory selected for two sweeps followed by the cursor (line between the average and peak detected video). Both sections of memory are updated during the respective Write Cycle. When both Display A and Display B are selected, each of the two display sweeps is an interlaced 512 increment combination of A and B data. The LSB into the RAM switches between 1 and 0 as the sweep runs. Again, the third sweep displays the cursor. When Save A is selected along with Display A Display B, one sweep displays A memory the next B memory followed by the cursor. The cycle then repeats. The A section of memory is not updated during Write Cycle.

The display process of data out of memory is a function of front panel latches (U10A, U10B, U20A, U20B). The output state of these latches establishes the operational mode of the Display Control circuitry and determines which memory (A or B) will be displayed. Pushing a front panel display button activates a latch so its output switches. If the output goes high, it turns on an LED which illuminates the respective push button to indicate the mode asserted. The output of the latch is applied through gating circuits to set the mode of the display control flip-flop U4554B. The Q output of U4554B is fed through gates (U4566B, U4532B) and forces the LSB for memory (when Save A is selected) to inhibit writing in A memory.

When Display A and Display B are selected the high on both lines enables the gates U4516A, U4516B, so their output is gated through U4516C, U4516D, as a high to the J and K inputs of flip-flop U4554B. This state also enables U4534B which enables the tri-state device U4592B and inhibits U4588B. The display counter (U4590) is now clocked by the output of U4554B. The Q output also becomes the LSB for memory during Read Cycle and since it is toggling, the information out of memory will consist of 256 bits of A data interlaced with 256 bits of B data. The Q output of U4554B is the LSB for the D/A converter (resistor ladder) U4570.

When Display A is selected, only the J input of U4554B goes high and the output remains constant. Only data in A memory is displayed. When Display B is selected, only the K input of U4554B goes high and Q output remains low which selects data in B memory. In both cases the display counter (U4590) is clocked by Hold B signal which is gated through U4588B. When Save A is selected, with either Display A or Display B, the output of U4554B is the same as described previously for these two modes; however, when Save A is selected, with Display A and Display B, both inputs to the flip-flop go low. The LSB (A) of the ring counter (U4558B, U4555C) is fed back to a three input NAND gate U4515B.

The ring counter counts in sequence as shown in Table 2-8. When the LSB (A) goes low (state 0), U4514B is enabled so U4554B is reset and data in B memory is displayed. After 256 display points, the LSB goes high (state 1) and the output of U4514B goes low. This triggers one-shot multivibrator U4538A which sets the flip-flop U4554B and, data in A memory is displayed. In state 2, U4544C allows cursor data to be displayed as previously described.

TABLE 2-8
Sequence of counter U4558B, U4556C

B/A	STATE
00	0
01	1
10	2

SECTION 3. PERFORMANCE CHECK

Introduction

Because specifications for amplitude and frequency measurement characteristics of this instrument are tighter than the specifications of typical test equipment, these procedures describe only an operational check. If the user desires to verify these characteristics, the accuracy of the measurement standard is the responsibility of the user and must exceed the specifications of the instrument. Assistance on how to verify these characteristics can be obtained from your local Tektronix Field Office.

The performance check is intended to verify that the 7L5 Spectrum Analyzer will meet the specifications listed in Section 1 of this manual. It is recommended that the performance check be included as part of the user routine maintenance program. An operational check out procedure is provided in the Operators Instruction manual. This procedure should be included as part of the overall instrument maintenance check.

The following procedures check the 7L5 sweep triggering frequency range, display flatness, resolution bandwidth, sweep rate, intermodulation distortion, and frequency drift. It does not include internal adjustments or checks. If the instrument fails to meet a specified performance requirement, the adjustment procedure for the related circuit will be found in the Calibration Procedure, Section 4.

Equipment Required or Recommended

Test equipment as listed in Table 3-1 is recommended for this portion of the performance check. Test equipment characteristics are the minimum required for accurate checks. Characteristics of substitute equipment must meet or exceed those listed in Table 3-1.

TABLE 3-1
Equipment List

Equipment/ Fixture	Specified Characteristics	Recommended Type/Model
Dual Trace Vertical Amplifier Plug-In Unit for 7000-Series Oscilloscope	Vertical Sensitivity, 5 mV to 5 V; bandwidth, >500 kHz.	Tektronix 7A18 Plug-in Amplifier
Low Frequency Signal Generator (2 required)	Range, 1 Hz-5 MHz; output accuracy, within 0.05 dB; expanded scale on output monitor; output impedance; 50, 75, and 600 ohms.	Hewlett-Packard 654A
Frequency Counter	Short term stability, 1 part in 10^7.	Tektronix 7D14 (7000-Series) or Digital Counter DC501, DC502 (TM500-Series)
Time Mark Generator	Outputs, 1 s, to 1 µs; accuracy, 0.001%.	TG501 (TM500-Series
Stable Signal Generator	Range, 400 kHz-5 MHz; short term stability, 1 part in 10^7.	Hewlett-Packard 8640B
50Ω Step Attenuator	1 and 10 dB steps; range, 1-79 dB; accuracy, +0.1 dB, -0.5 dB.	Tektronix 2701
Two 10X (20 dB) Attenuators	BNC connectors, 50 Ω for L1 Plug-In Module.	Tektronix Part No. 011-0059-02

1. Sweep Triggering

a. Connect the test setup per Fig. 3-1.

b. On the mainframe oscilloscope, select the Left Vertical Mode and the Left Vertical Trigger Source.

c. On the 7L5, set the Digital Storage to off, FREQUENCY SPAN/DIV to 0, and select the NORM and FREE RUN triggering switches.

d. Set the low frequency signal generator to 30 Hz at an output level of 1.5 vertical divisions on the crt graticule.

e. Select the INT trigger source and rotate the LEVEL/SLOPE control until a stable, triggered display of the 30 Hz signal is obtained.

f. Set the low frequency signal generator to 500 kHz and repeat step e.

g. Select the LINE trigger source. Apply an ac voltage through a 10X probe to the input of the vertical plug-in amplifier (e.g., 7A18). Verify a stable triggered display.

h. Select the FREE RUN and SGL SWP triggering switches. Verify that a sweep is initiated.

i. Select the trigger mode MNL SWP. Verify that the MNL SWP control can move the trace over approximately the same range as the normal sweep.

2. Dot Frequency Range and Accuracy

a. Connect test setup per Fig. 3-2. Set triggering to NORM and FREE RUN and set the other front panel controls as follows:

DOT FREQUENCY	500.00 kHz
RESOLUTION	COUPLED
FREQUENCY SPAN/DIV	50 (Hz)
TIME/DIV	AUTO
LOG 2 dB/DIV	On
REFERENCE LEVEL	-20 dBm
Mainframe Vertical Mode	Right
Mainframe Trigger Source	Right Vert

b. Set signal generator to 500 kHz and adjust the output amplitude for a 6 division display (approximately -24 dBm) on the analyzer crt. Carefully adjust the signal generator frequency to place the displayed signal under the frequency dot. Use the digital counter to verify that signal output frequency is 500.00 kHz +6 Hz.

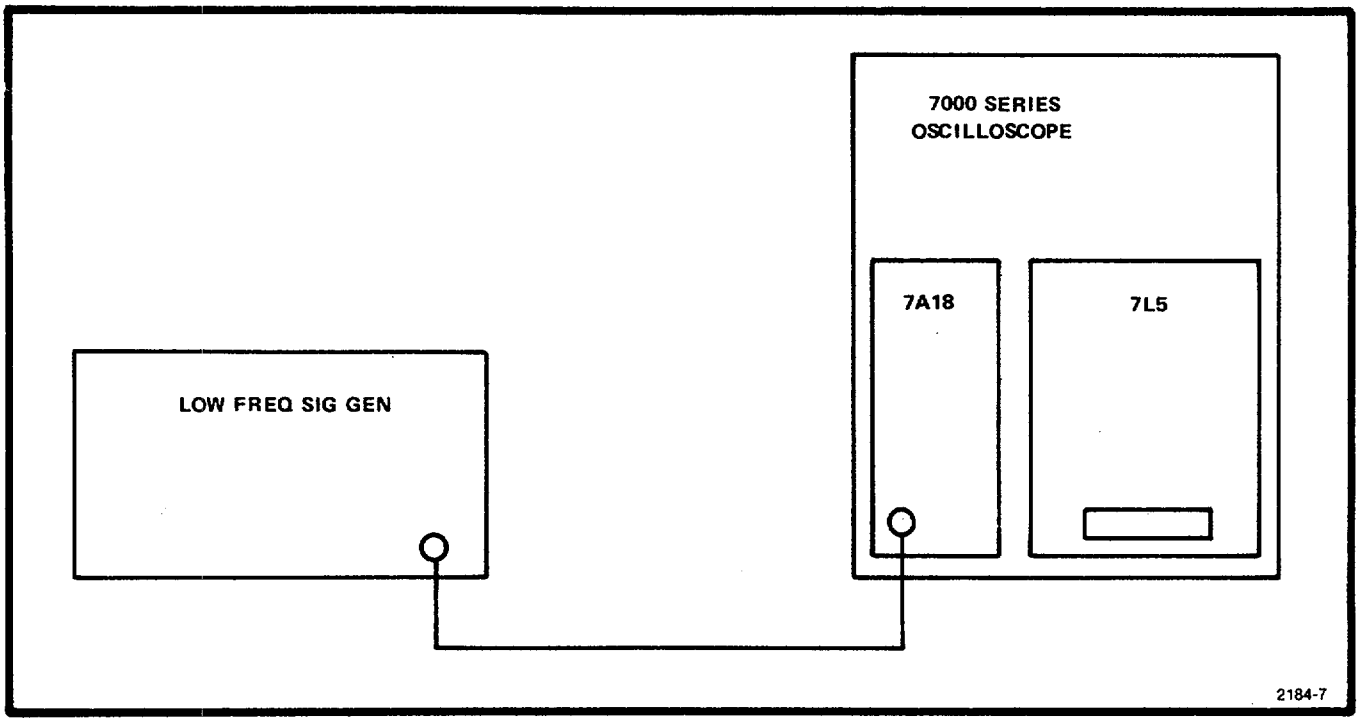

Fig. 3-1. Sweep triggering test equipment setup.

c. Set the signal generator to the following test frequencies and repeat step b for each frequency setting. Verify the dot frequency accuracy for each of the listed test frequencies.

Test Frequency, kHz	Tolerance
1,000.00	±7 Hz
1,500.00	±8 Hz
2,000.00	±9 Hz
2,500.00	±10 Hz
3,000.00	±11 Hz
3,500.00	±12 Hz
4,000.00	±13 Hz
4,500.00	±14 Hz
4,999.75	±15 Hz

3. Display Flatness

a. Connect test setup per Fig. 3-2. Set the front panel controls as follows:

DOT FREQUENCY	500.00 kHz
RESOLUTION	COUPLED
FREQUENCY SPAN/DIV	100 kHz
TIME/DIV	AUTO
LOG 2 dB/DIV	On
REFERENCE LEVEL	-20 dBm
DIGITAL STORAGE	Off

b. Set the signal generator frequency to 500 kHz and adjust its output level for a displayed 6 division signal amplitude reference on the analyzer crt graticule. Note the output level of the signal generator as indicated on the output level monitor meter.

c. Slowly adjust the signal generator frequency so the displayed signal moves across the full width of the graticule. Monitor the signal output level and adjust as required, to maintain a constant output. Verify that the displayed signal amplitude remains within 0.5 dB of the 6 division reference as the frequency is *moved* through *the* 1 MHz frequency range.

d. Set DOT FREQUENCY to 1500.00 kHz and repeat step c.

e. Set DOT FREQUENCY to 2500.00 kHz and repeat step c.

f. Set DOT FREQUENCY to 3500.00 kHz and repeat step c.

g. Set DOT FREQUENCY to 4500.00 kHz and repeat step c.

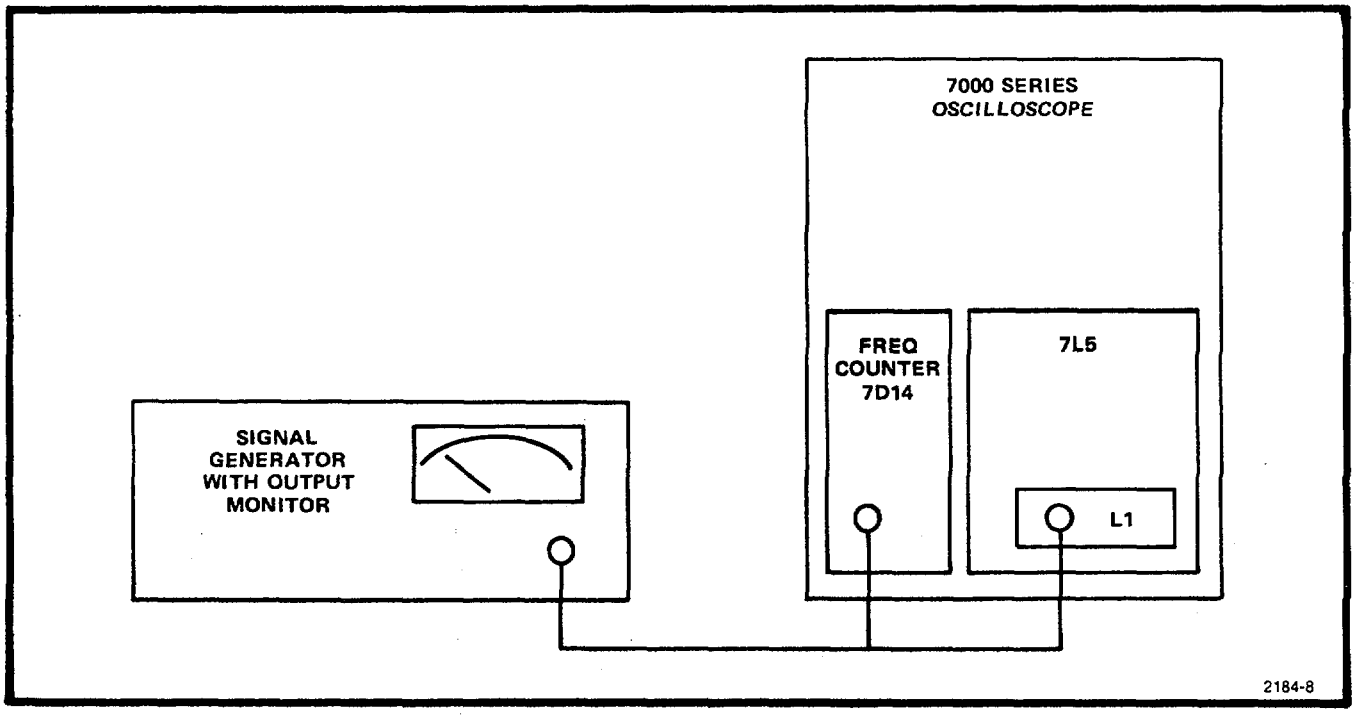

Fig. 3-2. Dot frequency range and display flatness test setup.

4. Frequency Span Accuracy and Linearity

a. Connect the CALIBRATOR signal to the INPUT connector and set the front panel controls as follows:

DOT FREQUENCY	0.00 kHz
RESOLUTION	30 kHz
FREQUENCY SPAN/DIV	MAX
TIME/DIV	AUTO
REFERENCE LEVEL	-30 dBm
Display Mode	LOG 10 dB/DIV

b. Verify that the crt display includes ten CALIBRATOR signals, excluding the signal at the left edge of the graticule. Verify linearity by ensuring that each signal is coincident with a vertical graticule line, within 5 percent (±0.25 division), over the 10 division display.

c. Connect the test setup in accordance with Fig. 3-3 and set front panel controls as follows:

DOT FREQUENCY	4000.00 kHz
FREQUENCY SPAN/DIV	200 kHz
RESOLUTION	10 kHz
REFERENCE LEVEL	+10 dBm or as required
DOT MKR	Max cw (dot to left edge of graticule)

d. Apply 5 us markers to the INPUT and verify one, (200 kHz) marker per division, ±2 percent, over the full graticule width. (i.e., If the controls are adjusted so that the marker behind the 2nd graticule line from the left edge is coincident, then the marker behind the 10th graticule line, at the right edge, must be within 0.2 division or 1.0 minor division.)

e. Set the FREQUENCY SPAN/DIV to 100 kHz and apply 10 Is markers to the INPUT connector. Verify one (100 kHz) marker per division, ±2 percent, over the full graticule width.

f. Apply markers and set the FREQUENCY SPAN/DIV control in accordance with Table 3-2. Verify frequency span accuracy by noting the markers per division for each setting. Adjust the RESOLUTION control as required to optimize display amplitude.

TABLE 3-2

FREQUENCY SPAN/ DIV Setting	Marker Gen. Setting	1 Marker/±2%
200 kHz	5 µs	1 div
100 kHz	10 µs	1 div
50 kHz	10 µs	2 div
20 kHz	50 µs	1 div
10 kHz	.1 ms	1 div
5 kHz	.1 ms	2 div
2 kHz	.5 ms	1 div
1 kHz	1 ms	1 div
.5 kHz	1 ms	2 div
.2 kHz	5 ms	1 div
.1 kHz	10 ms	1 div
50 Hz	10 ms	2 div

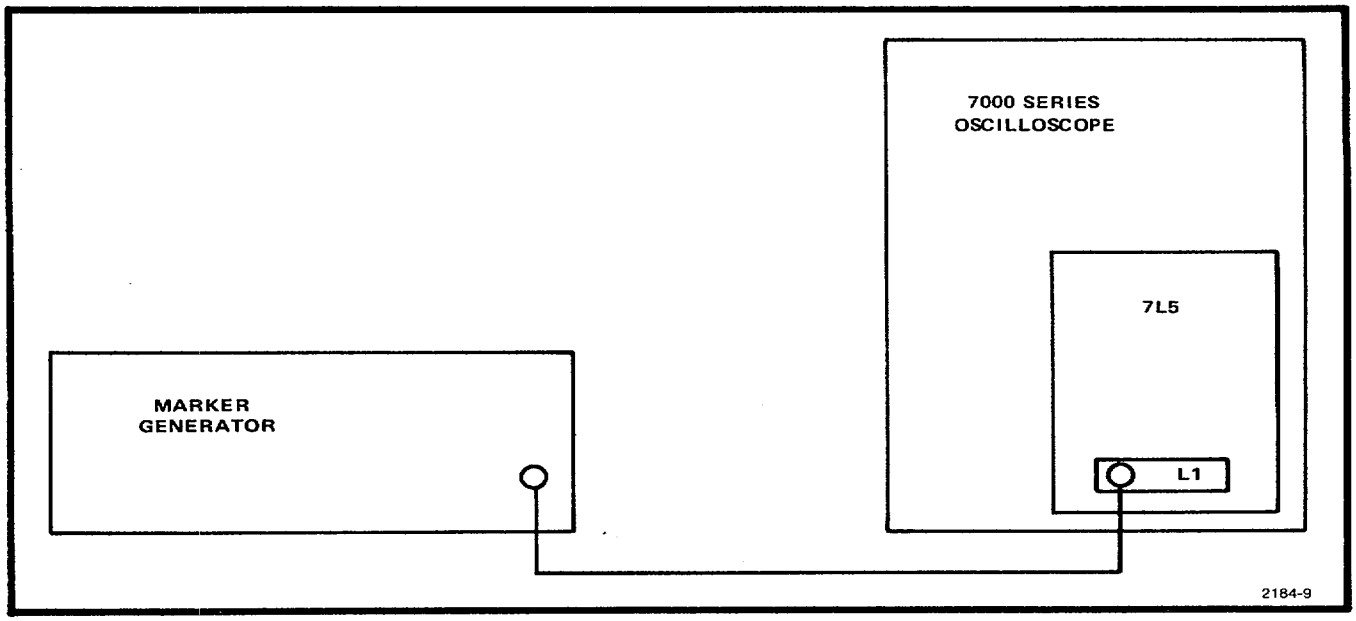

Fig. 3-3. Frequency span accuracy and linearity test equipment setup.

5. Sweep Rate Accuracy

a. Connect test setup per Fig. 3-4. Set the 7L5 front panel controls as follows:

FREQUENCY SPAN/DIV	0
TIME/DIV	.1 ms
TRIGGERING	INT and NORM

b. On the oscilloscope mainframe, select Left Vertical Mode and Left Vertical Trigger Source.

c. On the marker generator, select 0.1 ms markers. Adjust Volts/Div switch on vertical plug-in amplifier as required for a stable display on the crt.

d. Adjust 7L5 HORIZ POSITION as required, to align markers with the vertical graticule lines. Verify that the displayed markers per division are in accordance with Table 3-3 and within 5 percent of their respective graticule line, i.e., with the first marker on the left graticule line, the last marker should be within 0.5 division of the right graticule line.

e. Set TIME DIV switch to each position listed in Table 3-3 and repeat step d.

TABLE 3-3

7L5 TIME/DIV	Marker Generator	Displayed Markers/Div
.1 ms	.1 ms	1/1
.2 ms	1 ms	1/5
.5 ms	1 ms	1/2
1.0 ms	10 ms	1/5
5.0 ms	10 ms	1/2
10.0 ms	10 ms	1/1
20.0 ms	.1 s	1/5
50.0 ms	.1 s	1/2
.1 s	.1 s	1/1
.2 s	1 s	1/5
.5s	1 s	1/2
1.0 s	1 s	1/1
2.0 s	1 s	2/1
5.0 s	5 s	1/1
10.0s	5 s	2/1

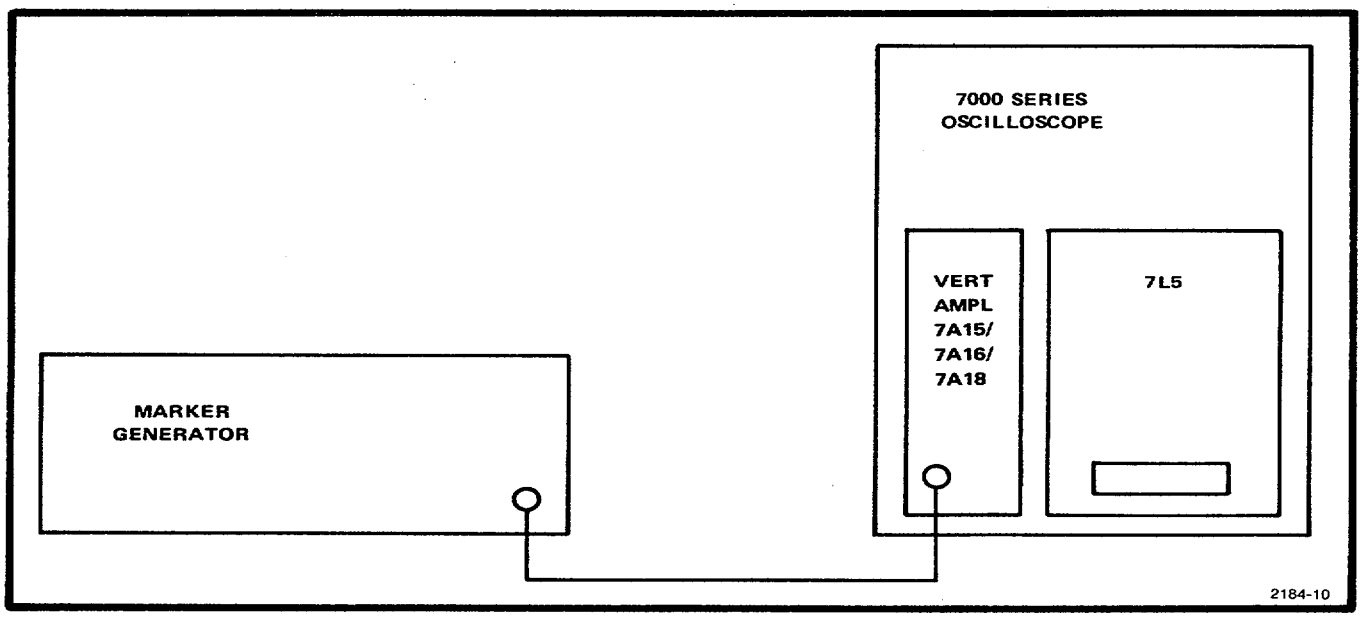

Fig. 3-4. Sweep rate test equipment setup.

6. Intermodulatlon Distortion

a. Connect test setup in accordance with Fig. 3-5. Set the 7L5 front panel controls as follows:

DOT FREQUENCY	2500.00 kHz
RESOLUTION	3 kHz
FREQUENCY SPAN/DIV	5 kHz
TIME/DIV	.2 s
LOG 10 dB/DIV	On
REFERENCE LEVEL	-30 dBm
INPUT BUFFER	Off
DIGITAL STORAGE	DISPLAY A/B
BASELINE CLIPPER	Max cw

b. Adjust the output level of the signal generator No.1 to approximately -20 dBm. Adjust its output frequency to 2495.0 kHz so that the displayed signal appears one division to the left of center screen,

c. Adjust the output level of signal generator No. 2 to approximately -20 dBm. Adjust its output frequency to 2505.0 kHz so that its displayed signal appears one division to the right of center screen.

d. Change the RESOLUTION to 300 Hz and adjust the signal generators output level so both signals are full screen (-30 dBm reference).

e. Reset the TIME/DIV to 2.0 s. Wait 20 seconds and verify that the third order intermodulation product, (3 divisions from center screen) is at least 7.5 divisions (75 dB) below the reference level.

f. Increase the external attenuation to reduce the input signal level by 10 dB. Set REFERENCE LEVEL to -40 dBm, Repeat step e to verify that third order IM products are at least 8 divisions below the reference level.

g. Reset signal generator No. 1 output frequency to 10.0 kHz and adjust its output signal level to--40 dBm (full screen). Wait 20 seconds and verify that the second order IM products (2 divisions from the signal generator No. 2 display) are 8 divisions (80 dB) below the reference level.

h. Remove 10 dB of external attenuation to Increase both Input signal levels, Set the REFERENCE LEVEL control to -30 dBm. Walt 20 seconds and verify that the second order IM products (2 divisions from signal generator No. 2 display) are at least 7.2 divisions (72 dB) below the reference level.

i. Set the INPUT BUFFER pushbutton to on. Wait 20 seconds and verify that the second order IM products are at least 8 divisions (80 dB) below the reference level.

j. Reset signal generator No. 1 frequency to 2495.0 kHz. Wait 20 seconds and verify that the third order IM products are at least 8 divisions below the reference.

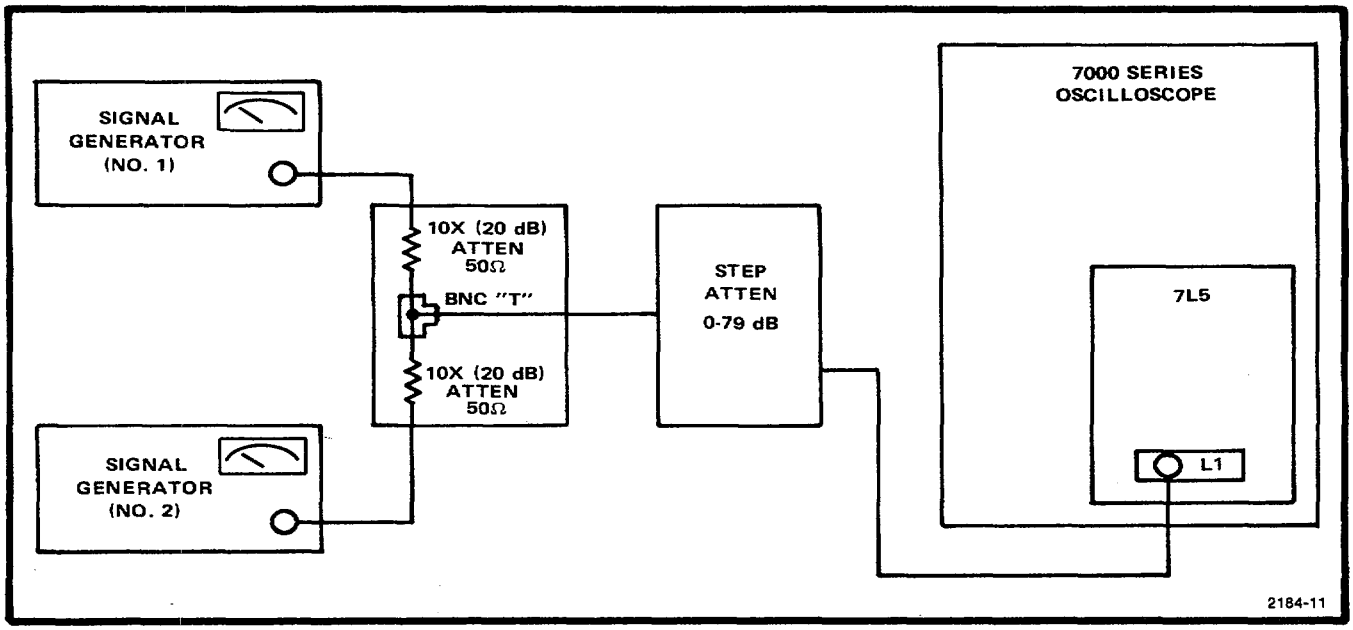

Fig. 3-5. Intermodulation distortion test equipment setup.

7. Displayed Frequency Stability

a. Connect the test setup in accordance with Fig. 3-2 using a stable signal generator; (A frequency should be equal to or less than 0.5 Hz/hour).

b. Adjust a stable signal source for an output frequency of 500 kHz at an output level of approxmately-20 dBm.

c. Set the 7L5 front panel controls as follows:

DOT FREQUENCY	500.00 kHz
RESOLUTION	100 Hz
FREQUENCY SPAN/DIV	50 (Hz)
TIME/DIV	.1 s
REFERENCE LEVEL	-27 dBm
DIGITAL STORAGE	DISPLAY A/B
Display Mode	LOG 2 dB/DIV

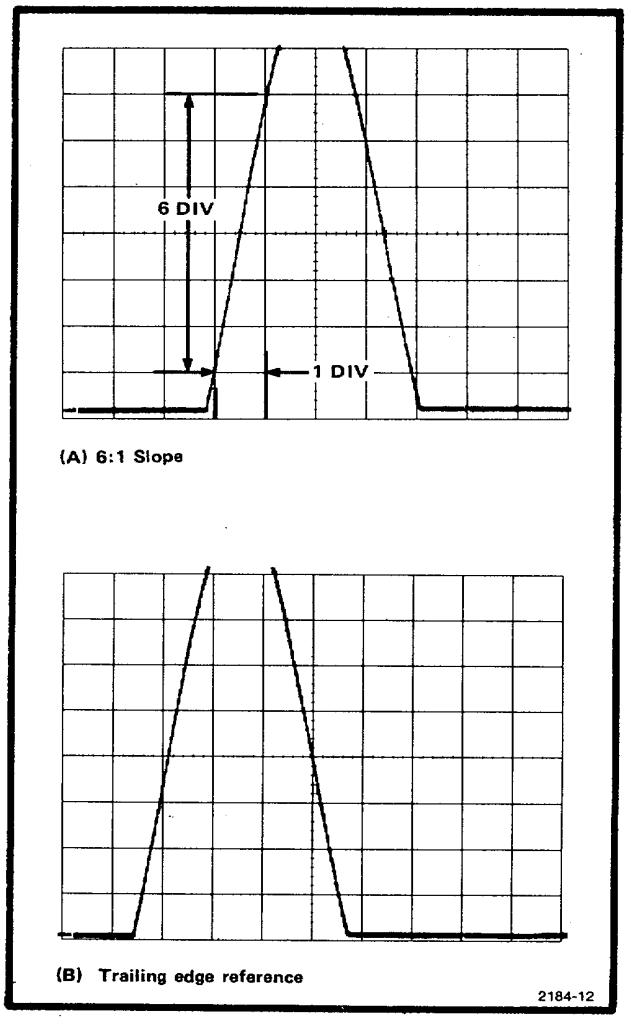

Fig. 3-6. Frequency stability test response setup.

d. With a displayed waveform similar to Fig. 3-6A, adjust the reference level slightly, as required, to establish a 6:1 slope on the linear portion of the waveform.

e. Carefully adjust the DOT MKR control to establish a center screen reference (vertical and horizontal) for the trailing edge of the waveform (Fig. 3-6B).

f. Activate the SAVE A and MAX HOLD pushbuttons.

g. After one hour, verify that any change in the displayed waveform is not more than 5 Hz. That is, any change in the displayed signal frequency, as indicated by horizontal and vertical separation between the display A "reference" waveform and the display B waveform, should be less than 0.6 vertical division (0.1 horizontal division). Refer to Fig. 3-7.

This completes the Performance Check and verifies that the 7L5 will perform within the specifications described in Section 1.

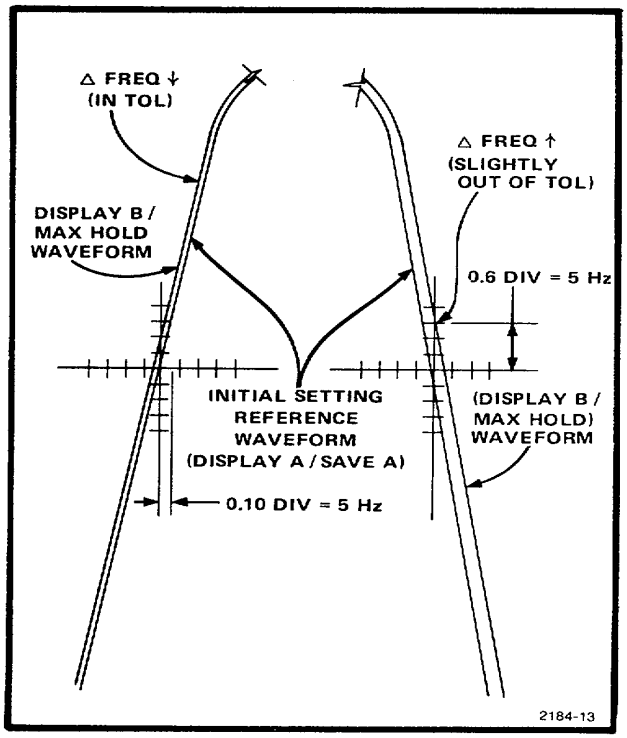

Fig. 3-7. Frequency stability test waveform interpolation.

SECTION 4. CALIBRATION PROCEDURE

CAUTION

STATIC DISCHARGE CAN DAMAGE MANY SEMICONDUCTOR COMPONENTS USED IN THIS INSTRUMENT.

Many semiconductor components, especially MOS types can be damaged by static discharge. Damage may not be catastrophic, therefore, not immediately apparent. It usually appears as a "weakening" of the semiconductor characteristics. Devices that are particularly susceptible are: MOS, CMOS, J FET's, and high impedance OP amps. Damage can be significantly reduced by observing the following precautions.

1. Handle static sensitive components or circuit assemblies at or on a static free surface. Work station areas should contain a static free bench cover or work plane such as, conductive polyethylene sheeting and a grounding wrist strap. The work plane should be connected to earth ground.

2. All test equipment, accessories, and soldering tools should be connected to earth ground.

3. Minimize handling by keeping the components in their original containers until ready for use. Minimize the removal and installation of semiconductors from their circuit boards.

4. Hold the IC devices by their body rather than the terminals.

5. Use containers made of conductive material or filled with conductive material for storage and transportation. Avoid using ordinary plastic containers. Any static sensitive part or assembly (circuit board) that is to be returned to Tektronix, Inc.; should be packaged in its original container or one with anti-static packaging material.

This section provides calibration adjustment procedures and internal checks. Performing the complete procedure will recalibrate the instrument to its specifications. After calibration, the instrument performance should be verified by performing the Performance Check.

The limits, tolerances, and waveform illustrations in this procedure are aids to calibrate the instrument and not intended as performance specifications.

Complete or Partial Calibration

Because the circuits are very stable, re-calibration is usually necessary only after a component has been replaced or the instrument has been operating for a number of hours. We advise checking the performance and recalibrate only those circuits that do not meet specifications. Turn to the desired step within this procedure and prepare the instrument for calibration by referring to the preceding setup and control instructions, then adjust or calibrate as directed.

The instrument should be cleaned and inspected, as outlined in the Maintenance section, before performing a complete calibration. Perform the checks and adjustments in sequence for a complete calibration. Verify performance after a recalibration.

History Information

The instrument and manual are periodically evaluated and updated. If modifications require changes in the calibration procedure, history information applicable to earlier instruments is included, as a deviation within a step or as a subpart to a step.

Interaction

Adjustments that interact with other circuits are noted and reference made to the affected circuit.

Equipment Required

Equipment for calibration includes the equipment listed for the Performance Check plus the following additional equipment.

1. Digital Voltmeter: 0.1% accuracy, 100 V range. Tektronix DC501 of the TM500-Series.

2. Two (2) Plug-In Extenders: Tektronix Part No. 067-0616-00.

3. Shorting strap or jumper; Jumper lead approximately 4 inches long with square pin connector and miniature alligator clip (see Fig. 4-19).

4. Four (4) 10 kΩ swamping resistor straps: See Fig. 4-16 for construction details.

5. Adjusting (tuning) tool for rf coils on the Variable Resolution assemblies: Ferroxcube Corp. Saugerties, New York. Part No. 991-0368-00.

6. Non-metallic tuning screwdriver: 1/8 inch blade, JFD Production Tool 7104-5.

7. 50 Ω feedthrough termination: Tektronix Part No.
011-0099-00.

Short Form Procedure and Record

The following abridged procedure provides a calibration record and an index to help locate adjustment steps.

7L5 Serial No._____

Calibration Date_____

Calibrator_____

1. Check/Adjust the Reference Oscillator Frequency — Page 4-6

Calibrate the CALIBRATOR frequency to 500 kHz ±1 Hz or the crystal oscillator frequency to 10 MHz ±20 Hz.

2. Calibrate the Calibrator Output Level — Page 4-6

a. Use a calibrated reference signal of 10 mV, into a Hi Z plug-in module, to establish a reference amplitude then adjust the CALIBRATOR output with R892 to this reference.

b. Use a calibrated reference signal of 10 mV, into a Lo Z plug-in module, to establish a reference amplitude then adjust the CALIBRATOR output with R895 to this reference.

3. Calibrate Span/Div — Page 4-7

a. Adjust the base voltage of Q365 to +11.0 volts with R365.

b. Adjust the MAX span dot position with R655.

c. Adjust the A Memory Gain with R345 for a voltage difference, at pin MH, of 16.6to 16.7 volts, between DOT frequencies of 00.00 and 4999.75 kHz.

d. Adjust the B Gain with R325 for a voltage difference, at pin ND, of 18.0 volts between DOT frequencies of 00.75 and 100.00 kHz.

4. Sweep Timing — Page 4-9

In the 0 span mode adjust the sweep timing with R685 for a calibrated sweep. (Use 10 ms/Div and 10 ms markers.)

5. 1st LO and 1st LO Phase Lock Calibration — Page 4-10

a. With P246 connected from pins 2 to 3, adjust R255 for a voltage of 1.4 V at P246. Return P246 to pins 1 and 2.

b. With SPAN/DIV at MAX, adjust the Sweep Offset with R2015 for a voltage of 3.2 V at pin PB.

c. Adjust the Sweep Gain with R2025 for minimum signal amplitude at pin PB. Peak to peak signal amplitude should not exceed 1 volt.

d. Repeat these steps because of interaction.

6. Function IF Calibration — Page 4-11

a. Calibrate the Volts/Div with R2205 for 1 V/10 dB signal level change at pin 6 of U2210.

b. With no signal applied and in LIN mode, adjust the Baseline Offset, with R2235, for 0 volt at pin 6 of U2210.

c. With the CALIBRATOR signal applied, adjust the REFERENCE LEVEL for -8 V at pin 6 of U2210, then adjust the 2 dB Offset with R2215 so the voltage at pin 6, for the 2 dB mode, is the same as it was in the LIN mode. Output level for the three display modes should match.

d. Calibrate the 2 dB Log and Lin 20 dB, 40 dB, and 60 dB gain with R1065, R1115, and Rl145 respectively. For the L1 and L2 Plug-In Modules, these 20 dB gain stages are switched in at REFERENCE LEVELS of -70 to -71 dBm (20 dB gain), -90 to -91 dBm (40 dB gain) and -110 to -111 dBm (60 dB gain).

7. Calibrate the 250 kHz IF, 2nd Mixer, and 10.7 MHz Input Filter Page 4-13

With the CALIBRATOR signal applied, peak L1200, L1400, C1606, C1600, and C1042.

8. Variable Resolution Amplifier Calibration Page 4-13

a. With three of the four stages swamped, adjust the response of each for symmetry, bandwidth, and amplitude. Each stage is adjusted by repeating this procedure for the 1st stage:

1. Adjust C1660 for symmetry 20 dB down, C1684 for symmetry 2 dB down and finalize with L1680.

2. Adjust the bandwidth 1.5 dB down with R1680.

b. After the response of all stages has been calibrated, set the bandwidth for the 1 kHz to 30 Hz RESOLUTION positions with R1700 (1 kHz) R1702 (300 Hz) R1704 (100 Hz) and R1706 (30 Hz).

c. Set the 10 Hz bandwidth with R1708 so the bandwidth 70 dB down is 100 Hz.

d. Calibrate and equalize the gain as follows:

1. Short the input to all but one of the gain setting circuits (operational amplifier and photo-resistor-LED (ICs).

2. Adjust the 10 Hz gain for the stage that is shorted, (R1685-1st stage, R1735- 2nd stage, R1795-3rd stage, and R1825- 4th stage) so there is minimum shift in signal amplitude as the RESOLUTION is switched from 10 Hz to 3 kHz.

e. Remove all shorting straps, center the front panel AMPL CAL adjustment, then, with -40 dBV CALIBRATOR signal applied and the REFERENCE LEVEL at -40 dBV, calibrate the 30 kHz and 10 kHz gain with R1905 and R1885. Now calibrate the gain for the 10 Hz to 3 kHz resolution bandwidth setting with R1835.

9. Digital Storage Calibration Page 4-16

a. With a DOT frequency of 500 kHz, SPAN/DIV at MAX, and RESOLUTIONCOUPLED, TIME/DIV 0.2 s, Display Mode 10 dB/DIV and DIGITAL STORAGE on, apply the CALIBRATOR signal to the IN-PUT and adjust the Horizontal Equalization with R4585 in a ccw direction until the display remains stored.

b. Increase the sweep rate and adjust the Horizontal Offset with R4570 to place the 500 kHz marker under the DOT.

c . Adjust the Horizontal Gain with R4625 so the store and non-store position of the 4500 kHz marker Is the same.

d. With a SPAN/DIV of 10 kHz, adjust the Vertical Gain with R4565 so the amplitude of the stored display and the non-store display are the same.

e. Check the operation of DISPLAY A and SAVE A, then DISPLAY B and MAX HOLD.

Preliminary Procedure

NOTE

Instrument calibration should be performed at a temperature equal to the ambient operating temperature that is normally within +200 C to +300 C after a warmup period (with power on) of at least 10 minutes to allow the instrument to stabilize.

1. Check the front panel controls and selectors for smooth operation and proper indexing.

2. Remove the 7L5 from the mainframe and reconnect it to the mainframe interface through the flexible plug-in extender cables. Connect the 7L5 to the center two compartments if a four hole mainframe is used. Remove the four screws that hold the IF module assembly in place (see Fig. 4-1D). This will allow the assembly to swing out and down for access to internal adjustments.

3. Turn the power ON and allow the instrument circuits to stabilize before making any adjustments.

NOTE

Fig. 4-1 is a series of four photographs that show the location of the major circuit boards and assemblies, that are referred to in this procedure.

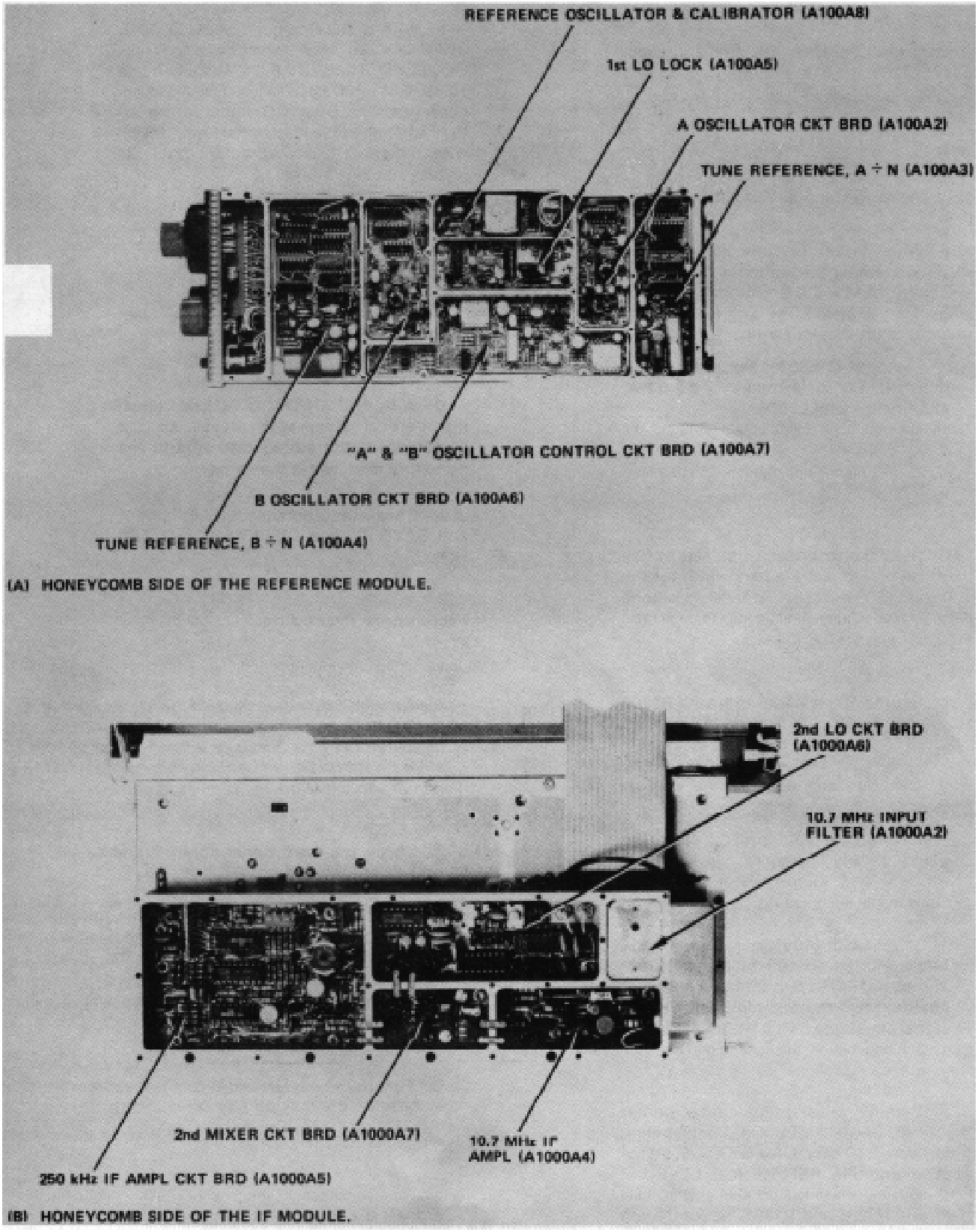

Fig. 4-1A & B. Location of the major circuit boards and assemblies for the 7L5.

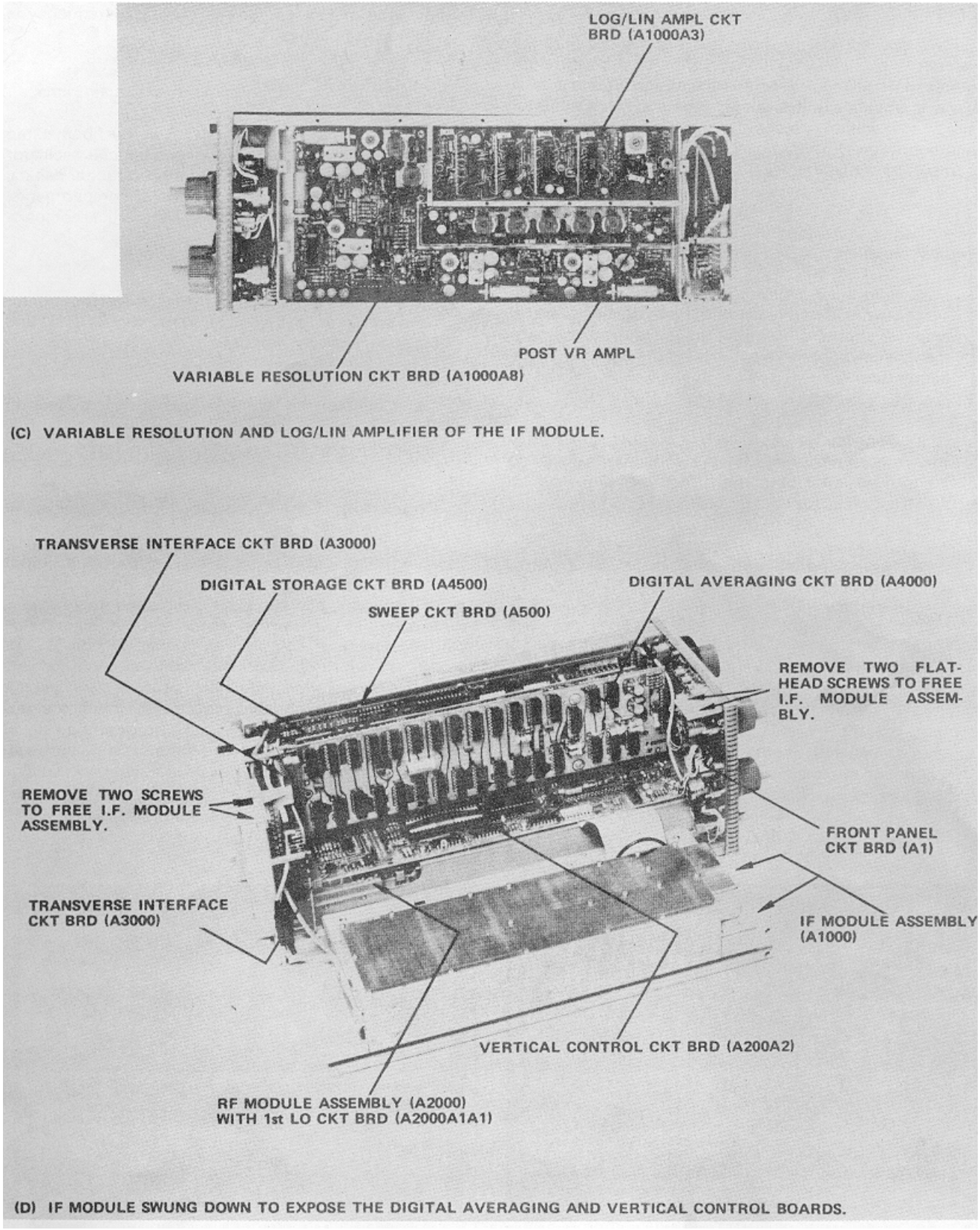

Fig. 4-1C & D. Location of the major circuit boards and assemblies for the 7L5.

1. Check/Adjust the Reference Oscillator Frequency

Two procedures are given to check and adjust the reference oscillator frequency. The 1st procedure re- quires a four plug-in compartment mainframe and a vertical amplifier unit to amplify the 500 kHz Calibrator signal so it will drive a counter. The 2nd procedure is an alternate procedure that can be used with three plug-in compartment mainframes.

a. Using a four plug-in compartment mainframe and vertical amplifier unit:

1. Plug the 7L5, through extender cables, into the center two compartments of the mainframe, a vertical amplifier unit (e.g., 7A16) in the left vertical compartment, and a counter (e.g., 7D14) In the right horizontal compartment.

2. Connect the CALIBRATOR output to the Input of the vertical amplifier. Set the vertical sensitivity to 10 mV/Div, Input coupling to ac, and bandwidth to 20 MHz or less to reduce noise above 500 kHz.

3. Switch the mainframe Vertical Mode to Alt or Chop, Horizontal Mode to Chop, and B Trigger Source to Left Vertical.

4. Set the counter Input selector to Trig Source and the Measurement Interval to 10 s.

5. After a 5 minute warmup period, check the calibrator frequency. Frequency should measure 500 kHz ±1 Hz (499.999 to 500.001).

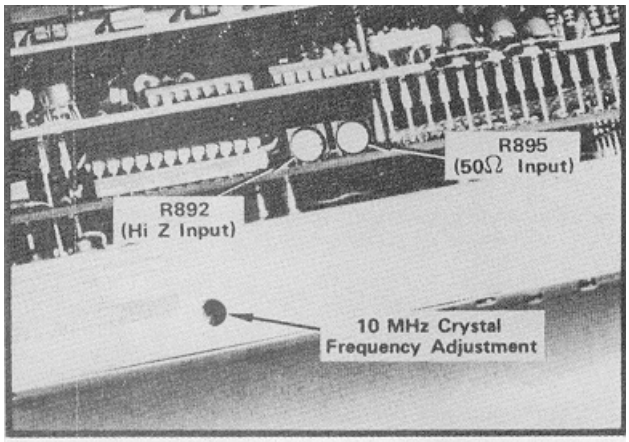

Fig. 4-2. Calibration adjustment locations for the Reference Oscillator and Calibrator.

6. Set the crystal frequency, with the adjustment illustrated in Fig. 4-2, so the calibrator frequency is within specifications.

b. Using a three plug-in compartment mainframe:

1. Remove the rf screen cover over the honeycomb reference module containing the reference oscillator circuit board. Plug the 7L5, through extender cables, into the right vertical and horizontal compartments, and a counter (e.g., 7D14) into the left vertical compartment.

2. Connect a 1X probe from the Input of the counter to the output of the crystal reference oscillator at P390 (Fig. 4-3). Note the frequency.

3. Calibrate the reference oscillator frequency to 10.0000 MHz ±20 Hz with the crystal adjustment illustrated in Fig. 4-2.

2. Check/Adjust the Calibrator Output Level The output of the Calibrator is -40 dBV at 500 kHz. Low and High Level adjustments calibrate the output current for low impedance (50 n) and high impedance (1 MΩ) plug-in modules. This calibration can be per- formed by using a low impedance and high impedance plug-in module or any plug-in module with pin B13 of J2219 or pin P of J530 shorted to ground for low impedance calibration and pin B13 of J2210 open for high impedance calibration. The output level of the calibrator is calibrated to a reference level set by a calibrated signal source. A high impedance rms differential .voltmeter, with an accuracy of 1% or better, is used to set the reference level of the signal source.

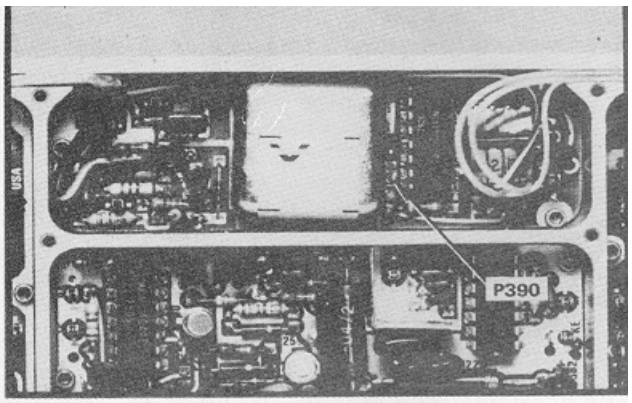

Fig. 4-3. Test point location for the 10 MHz Crystal Oscillator.

a. Remove the plug-in module and place insulating tape (e.g., Scotch tape) over pins A13-B13, A14-B14, A15- B15 of the interface connector (Fig. 4-4), then re-insert the plug-in module in its compartment.

b. Apply a 500 kHz signal from a signal source with a variable output adjustment to an accurate (within 1%) differential voltmeter and set the output of the signal generator for 10 mV rms.

c. Now apply the calibrated 10 mV signal through an unterminated cable to the INPUT of the L-series plug-in module.

d. Set the 7L5 FREQUENCY SPAN/DIV to 2 kHz, RESOLUTION to 30 k, Display Mode for 2 dB/Div, and adjust the REFERENCE LEVEL so the signal amplitude is at center screen or some reference level.

e. Disconnect the reference signal and apply the 7L5 CALIBRATOR signal to the INPUT.

f. Calibrate the output level of the Calibrator to the reference level, by adjusting R892 (Fig. 4-2).

g. Now calibrate the signal source to 10 mV, into 50 ohm load, by applying the signal through a 50 ohm (within 1%) feedthrough termination to the differential voltmeter and adjust the generator output to 10 mV.

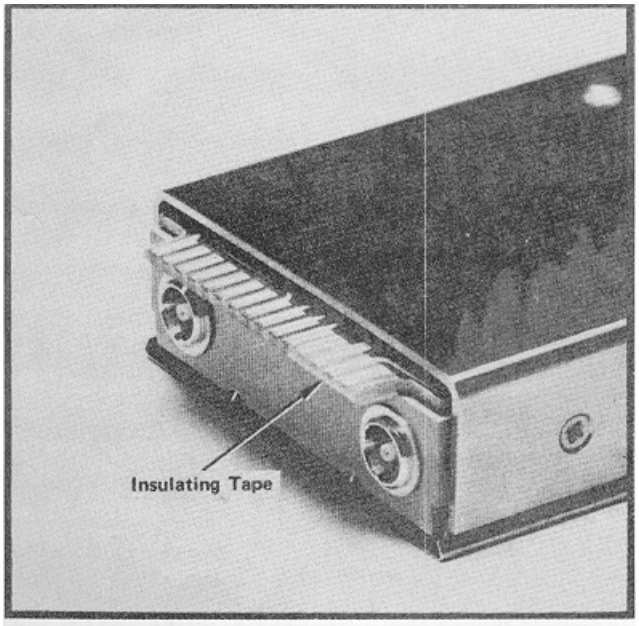

Fig. 4-4. Plug-in module connector partially Insulated so the HI Z calibrator level can be adjusted.

h. Apply the unterminated signal to the INPUT of the plug-in module for the 7L5 and adjust the REFERENCE LEVEL so the signal amplitude is again at some graticule reference point.

i. Remove the reference signal from the INPUT and apply the CALIBRATOR signal to the INPUT.

j. Use a shorting strap to short pin B13 of J2210 (Fig. 4-5) to ground. (Pin B13 and pin 13 of the decoupling circuit board are connected together.)

k. With pin B13 shorted, adjust the calibrator output with R895 (Fig. 4-2) until it equals the reference level of the signal source.

l. Remove the shorting strap and recheck the calibrator signal level for high impedance input. If R892 must be readjusted, recalibrate the signal source for high impedance and repeat the above procedure for high impedance and low impedance calibration. These two adjustments interact.

m. Remove the insulation from the plug-in connector and re-insert the plug-in module into the 7L5 compartment.

3. Frequency Span/Div (Reference Module & Sweep) Calibration

a. Remove the rf screen cover over the honeycomb assembly. Set the FREQUENCY SPAN/DIV to 0, the DOT FREQUENCY to 2500.00 kHz, and turn the DOT MKR control fully ccw to its detent position.

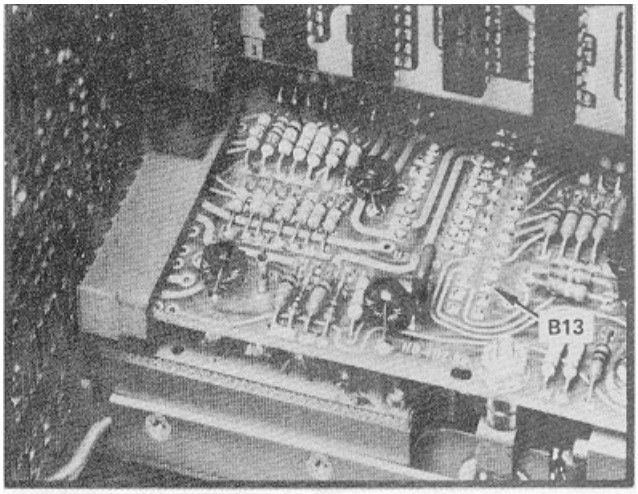

Fig. 4-5. Location of B13 on J2210.

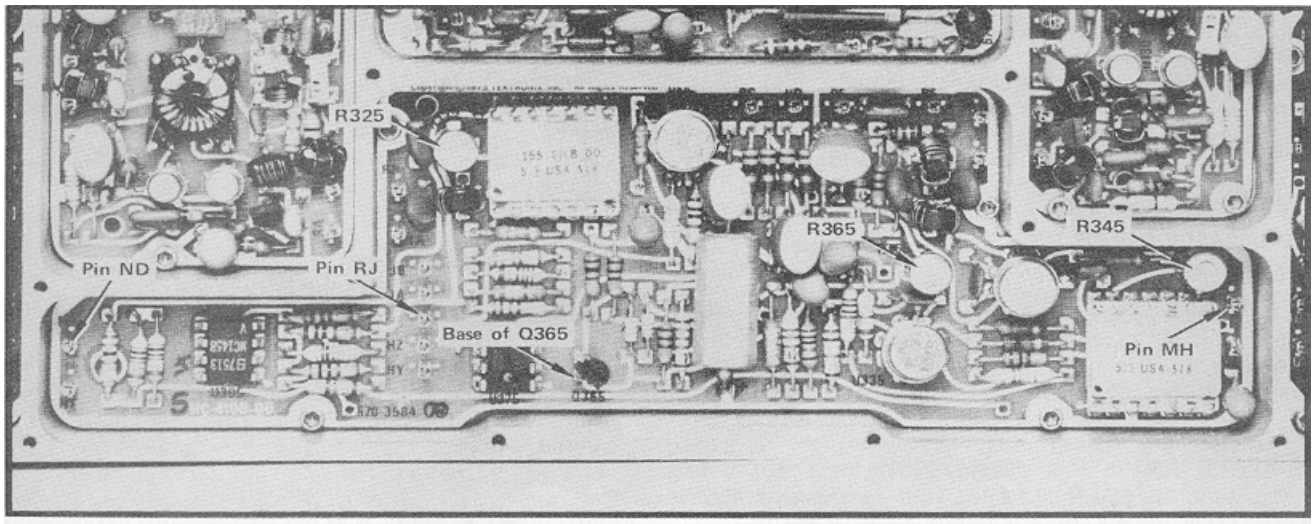

Fig. 4-6. Test point and adjustment locations for the A & B Oscillator Control.

b. Connect a DVM (digital voltmeter) to the base of Q365 (A and B Oscillator Control 7) and adjust R365 (Fig. 4-6) for a reading of 11.00 volts.

c. Change the FREQUENCY SPAN/DIV to 5 kHz. Position the marker dot to the center line of the graticule with the HORIZ POSITION control.

d. Set the FREQUENCY SPAN/DIV to MAX. Adjust the Max Span Dot Position with R655 (Fig. 4-7) to center the marker dot on the graticule.

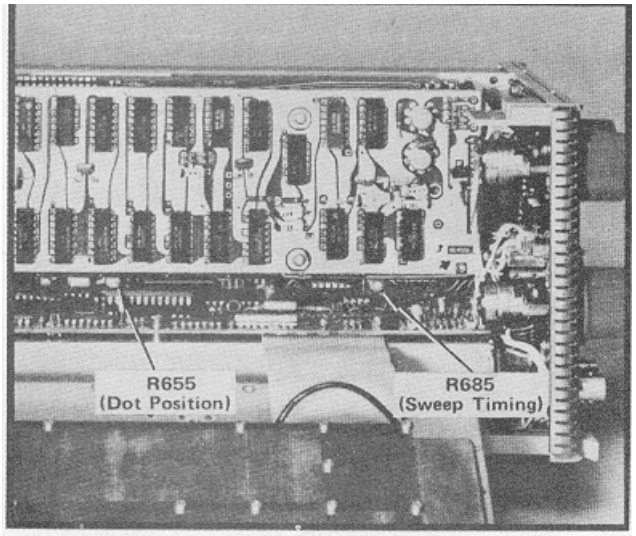

Fig. 4-7. Location of Dot Position and Sweep Timing adjustments and test points.

NOTE

If any frequency determining component (such as Varactor diode CR122) has been replaced, or the marker dot cannot be centered with adjustment R655, the following procedure should be used.

1. Adjust R655 (Fig. 4-8) for 0 V at pin RJ (Fig. 4-6) then add or remove jumpers P122 and/or P124 (Tektronix Part No. 131-1493-00) so the DOT is close to, but not to the right of, center screen (high frequency side).

2. Now adjust R655 to center the marker dot on the crt graticule.

e. Set the DOT FREQUENCY to 00.00 kHz and connect the DVM to pin MH (A Memory) of the A and B Oscillator Control (Fig. 4-6). Note the voltage.

f. Change the DOT FREQUENCY to 4999.75 kHz and note the new voltage reading.

g. Adjust the A Memory Gain with R345 (Fig. 4-6) until the voltage difference between step e and f is 16.6 to 16.; volts.

NOTE

The following step is usually necessary only if some frequency-determining component such as diode CR260, has been replaced.

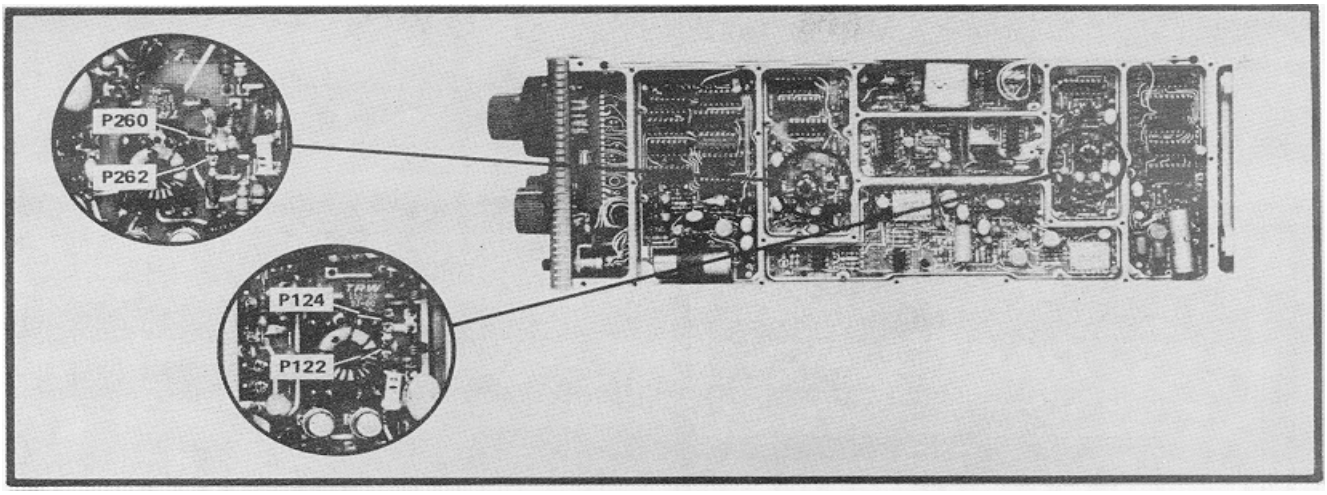

Fig. 4-8. Location of A & B Oscillator frequency determining jumpers.

h. Set the DOT FREQUENCY to 50.00 kHz then check the voltage at pin ND of the A and B Oscillator Control (Fig. 4-6). If the voltage is more than ±1.5 V, remove or add jumpers P260 and P262 (Fig. 4-8) to decrease the voltage below ±1.5 V.

i. Set the DOT FREQUENCY to 99.75 kHz. Measure the voltage at pin ND of the A and B Oscillator Control assembly (Fig. 4-6). Note this voltage.

j. Change the DOT FREQUENCY to 100.00 kHz. Measure and note the new voltage at pin ND.

k. Adjust the B Gain with R325 (Fig. 4-6) until the voltage difference at pin ND, between the two DOT FREQUENCY settings (steps i and j), is 18.0 volts.

l. Set the FREQUENCY SPAN/DIV to 500 kHz. Apply the CALIBRATOR signal to the INPUT and adjust the Reference Level (approximately -30 dBm) to display 1 marker/division.

m. Check the span accuracy at 99.75 kHz and 100.00 kHz. If the accuracy percentage is positive at 99.75 and negative at 100.00 kHz (e.g., +1% and -3%),R325 can be adjusted to balance the error at each setting, thus keeping the span accuracy within the specification of 4%.

n. Set the FREQUENCY SPAN/DIV to any position other than MAX and adjust the HORIZ POSITION to center the marker dot on screen.

o. Set the FREQUENCY SPAN/DIV to MAX and the DOT FREQUENCY to 2500.00 kHz. Apply the CALIBRATOR signal to the INPUT.

p. Adjust the DOT position, with R655 (Fig. 4-7) so it is aligned to the 2500 kHz marker.

q. Adjust the front panel SWP CAL and HORIZ POSITION so the sweep span is calibrated to the 500 kHz and 4500 kHz Calibrator markers.

r. Tune the DOT FREQUENCY through its full range. Start at the left edge and check for tuning smoothness and accuracy as the DOT aligns behind successive graticule lines for every 500 kHz of dot frequency. Alignment accuracy should be within ±10 kHz.

4. Sweep Timing

NOTE

The front panel SWP CAL and the SPAN/DIV calibration must be made before the sweep timing is calibrated.

a. Apply 10 ms markers from the time mark generator to the left amplifier plug-in unit. Set the mainframe Vertical Mode and Trigger Source selectors to Left so the amplifier output is displayed.

b. Set the 7L5 TIME/DIV to 10 ms, FREQUENCY SPAN/DIV to 0, DIGITAL STORAGE off, TRIGGERING SOURCE to INT, and MODE to NORM. Adjust the Triggering LEVEL control for a triggered display.

c. Position the display with the HORIZ POSITION control and adjust R685 (Fig. 4-7) for 1 marker/division.

d. Check other TIME/DIV settings for accuracy, using appropriate time marker input. Accuracy should equal or exceed 5% of the TIME/DIV selection.

e. Return the TIME/DIV to 100 ms.

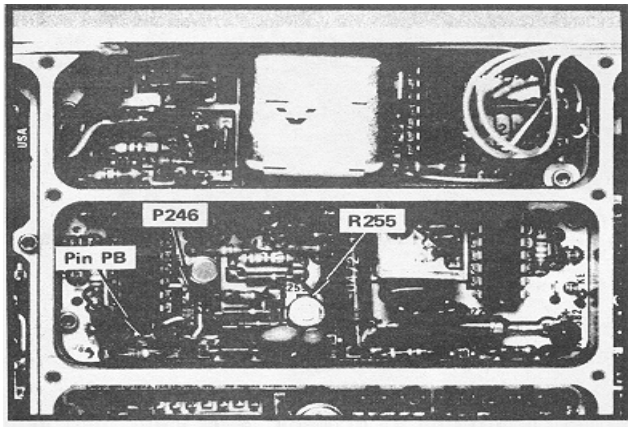

Fig. 4-9. Location of 1st LO Phase Lock test points and adjustments.

5. 1st LO and 1st LO **Phase Lock Calibration**

(Diagram 10)

a. With the vertical amplifier unit (e.g., 7A18) in the left vertical compartment of the 7L5 mainframe, switch the Vertical Mode to Chop so both the 7L5 and amplifier displays can be observed.

b. Set the amplifier Volts/Div to 1 V, the 7L5 DIGITAL STORAGE off, and the TIME/DIV to 10 ms.

c. Ground the Input of the amplifier and position the trace to the center graticule line then switch the amplifier input coupling to DC so dc voltage can be measured.

d. Connect P246 (Fig. 4-9) from pin 2 to 3 then use the dc coupled amplifier to measure the dc voltage on P246. Adjust R255 (Fig. 4-9) for a voltage of 1.4 V. Reconnect jumper P246 from pin 1 to 2.

e. Connect the In put of the vertical amplifier through a test probe to pin PB (Fig. 4-9) on the 1st LO Lock board. With the FREQUENCY SPAN/DIV at MAX position, adjust the Sweep Offset, with R2015 (Fig. 4-10), for a voltage of 3.2 V at pin PB.

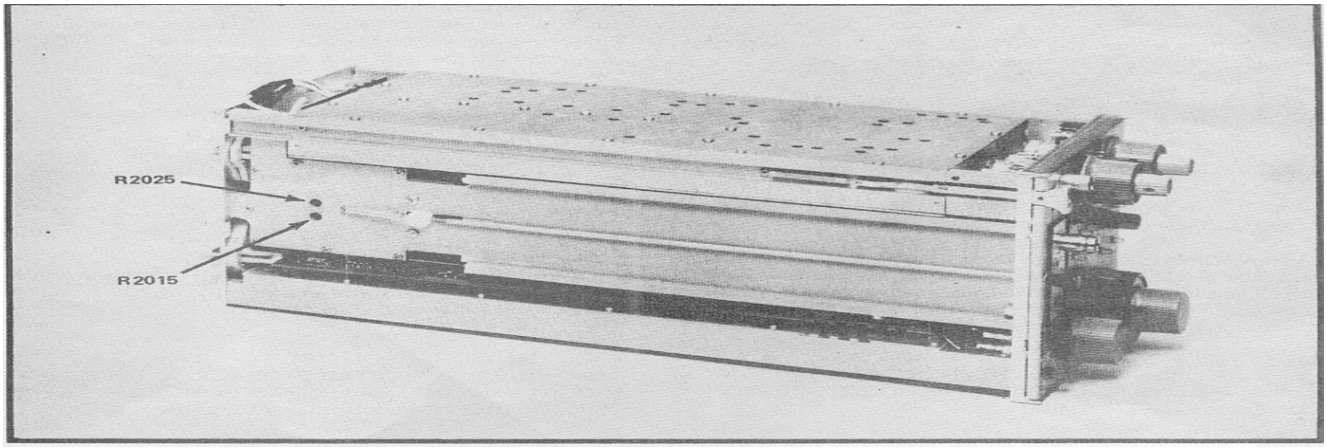

Fig. 4-10. Location of 1st LO adjustments.

f. Now adjust the Sweep Gain, with R2025 (Fig. 4-10), for minimum signal amplitude as illustrated in Fig. 4-11. Repeat the Sweep Offset and Sweep Gain adjustments until minimum peak-to-peak signal amplitude is obtained with a dc level, at pin PB, of 3 2 V.

NOTE

The 1st LO frequency must be nearly correct to obtain the proper waveform from the 1st LO lock. If this waveform cannot be obtained, set the FREQUENCY SPAN/DIV to MAX, Display Mode to 10 dB/DIV, and RESOLUTION to 30 kHz. Note the position of the 0 Hz start spur. Now, adjust R2015 and R2025 (Fig. 4-10) to position the 0 Hz start spur under the first graticule line. **If the lock is working, there should be a slight hesitation as the 0 Hz start spur Is tuned past the fit graticule line. Once the 0 Hz start spur Is In the correct position, a usable waveform should be obtained from the 1st LO lock.**

g. Return the TIME/DIV to 100 ms or slower and switch DIGITAL STORAGE (DISPLAY A) on.

6. Function IF Calibration

a. Apply the CALIBRATOR signal through a 10 dB step attenuator to the INPUT of the plug-in module.

NOTE

The step attenuator impedance must match the input impedance of the L-series plug-in module.

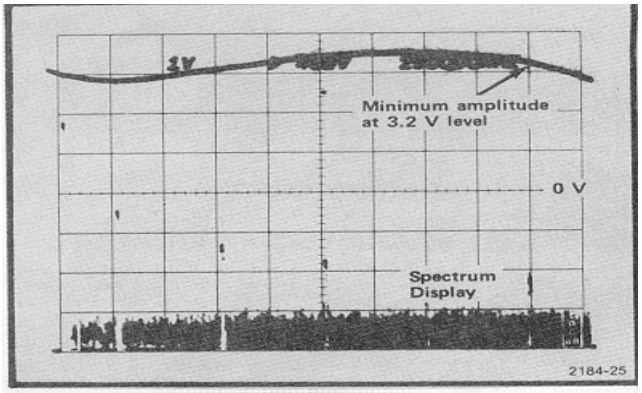

Fig. 4-11. Typical response at pin PB when adjusting Sweep Offset and Gain.

b. Connect the Input of a vertical amplifier plug-in unit (e.g., 7A18) through a 10X probe to pin 6 of U2210on the Vertical Control board (Fig. 4-12 and Diagram 18).

c. Set the Volts/Div (vertical sensitivity) of the amplifier unit to 1 V, the Input Coupling to dc, and the 7000-Series mainframe Vertical Mode and Trigger Source switches to display the output of the vertical amplifier unit.

d. Set the DOT FREQUENCY to 500.00 kHz, the RESOLUTION to 30 k, the FREQUENCY SPAN/DIV to 0, and the Display Mode to 10 dB/DIV. Adjust the REFERENCE LEVEL and VAR controls to set the voltage, at pin 6 of U2210, at a graticule reference line.

NOTE

Reference level should be =30 dBm or more to minimize noise,

e. While switching the step attenuator In 10 dB steps, to change the input signal level 10 dB, adjust Volts/Div Cal R2205 (Fig. 4-12) for a corresponding 1.0 V change (at pin 6) per 10 dB change of signal level. Return the step attenuator to 0 dB.

f. Select the LIN mode with a reference level of 1 mV/Div or higher, disconnect the CALIBRATOR signal from the INPUT and adjust Baseline Offset R2235 (Fig. 4-12) for 0 volt at pin 6 of U2210. Position this 0 V reference level at the top graticule line with the Vertical Position control.

g. Reconnect the CALIBRATOR signal to the INPUT and adjust the REFERENCE LEVEL controls for an output level of -8 volts at pin 6 of U2210.

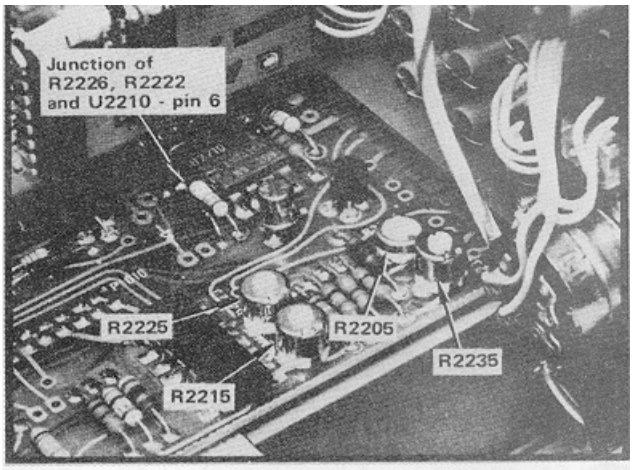

Fig. 4-12. Location of Vertical Control board test points and adjustments.

h. With the REFERENCE LEVEL set as directed in step f, switch the Display Mode to 2 dB/DIV and adjust 2 dB Offset R2215 (Fig. 4-12) so the output level at pin 6 is -8 volts. The output level of U2210, for all three modes, should match.

NOTE

The display level may vary between display modes due to the mainframe sensitivity. This can be corrected with the front panel LOG CAL and AMPL adjustments.

i. Disconnect the 10X probe from pin 6 of U2210. Switch the mainframe Vertical Mode and Trigger Source selectors to display the 7L5 output. Switch the Display Mode to 2 dB/DIV and adjust the REFERENCE LEVEL controls (at or near -50 dBm) to position the display at the top graticule line.

j. Calibrate the 2 dB Log and Lin 20 dB, 40 dB, and 60 dB gain stages as follows:

NOTE

For L1 and L2 plug-in modules, these 20 dB gain stages are switched in at REFERENCE LEVELS of -70 to -71 dBm (20 dB Gain), -90 to -91 dBm (40 dB Gain), and -110 to -111 dBm (60 dB Gain).

1. With the REFERENCE LEVEL at -51 dBm, add external attenuation (approximately 40 dB) with the step attenuator until the display level is at the top graticule line.

2. Add 20 dB of external attenuation and increase the 7L5 REFERENCE LEVEL or amplifier gain 20 dB (-71 dBm).

3. Adjust the 20 dB Gain, with R1065 (Fig. 4-13), so the signal level equals the reference level (established in step 1).

4. Add an additional 20 dB of external attenuation and increase the 7L5 REFERENCE LEVEL to -91 dBm.

5. Adjust the 40 dB Gain with R1115 (Fig. 4-13) so the display level equals the reference level.

6. Repeat the procedure to calibrate the 60 dB Gain with R1145 (Fig. 4-13).

7. Calibrate the 250 kHz IF, 2nd Mixer, and 10.7 MHz Input Filter

a. Remove both rf screen covers over the IF processing honeycomb and the Variable Resolution honeycomb assembly.

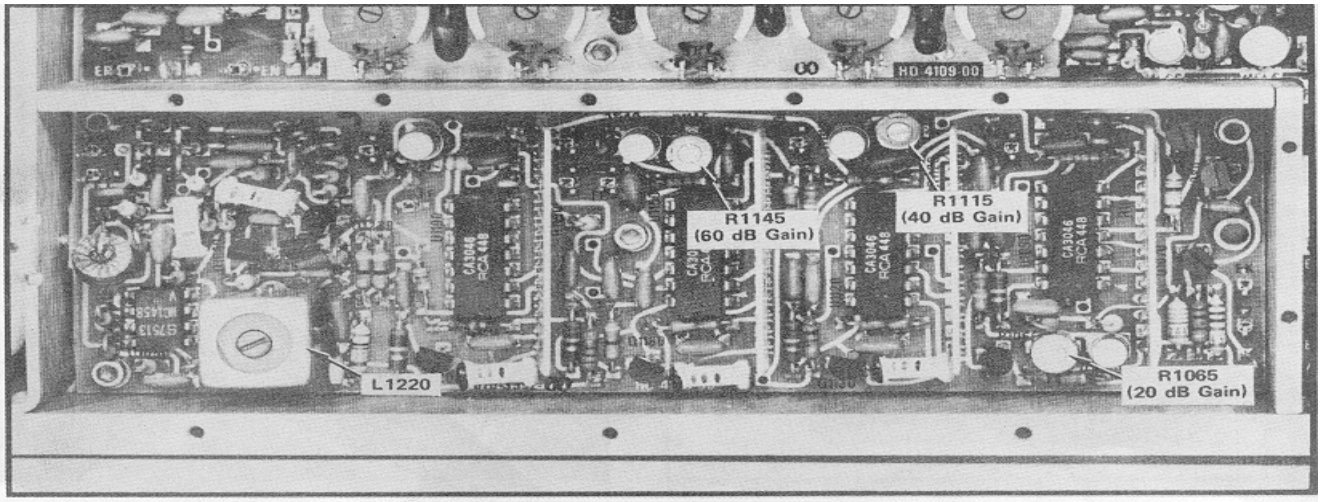

Fig. 4-13. Test points and adjustments on the Log/LIn Amplifier board.

b. --- Apply the CALIBRATOR signal to the INPUT of the plug-in module. Set the DOT FREQUENCY to 500.00 kHz, Display Mode for 2 dB/DIV, DIGITAL STORAGE off, FREQUENCY SPAN/DIV at 0, RESOLUTION 30 kHz, and TIME/DIV to 2 ms.

c. --- Adjust L1200 (Fig. 4-13), L1400, C1604, C1600, and C1042 (Fig. 4-14) for maximum response to the 500 kHz Calibrator signal.

8. Variable Resolution Calibration

a. --- With the front panel controls set as directed in step 7, adjust L1916, and L1918 (Fig. 4-15) for maximum response.

b. --- Change the RESOLUTION to 10 kHz and adjust L1856, L1860, L1864, L1870, and L1872 (Fig. 4-15) for maximum response.

c. --- Change the FREQUENCY SPAN/DIV to 5 kHz and adjust the10 kHz filter response with L1856,L1860,L1864, L1870, and L1872 for maximum amplitude and symmetry around the DOT frequency. Bandwidth (6 dB down) should be 10 kHz ±20%.

d. --- Set the RESOLUTION to 30 kHz, FREQUENCY SPAN/DIV to 10 kHz, and adjust L1916, L1918 (Fig. 4-15) for symmetry and maximum amplitude around the DOT frequency.

e. --- Return the FREQUENCY SPAN/DIV to 0, tune the crystal filter center frequency to 250 kHz with adjustments C1666, C1726, C1766, and C1806 (Fig. 4-15). Tune for maximum response amplitude as the RESOLUTION is decreased towards 10 Hz.

f. ---- Adjust the response of each VR stage for response symmetry, amplitude, and bandwidth as follows:

------1. Set the FREQUENCY SPAN/DIV to 5 kHz, RESOLUTION to 3 kHz, and Display Mode to 10 dB/DIV.

------2. Adjust the REFERENCE LEVEL for an on-screen display so the shape and bandwidth (20 dB down) can be observed.

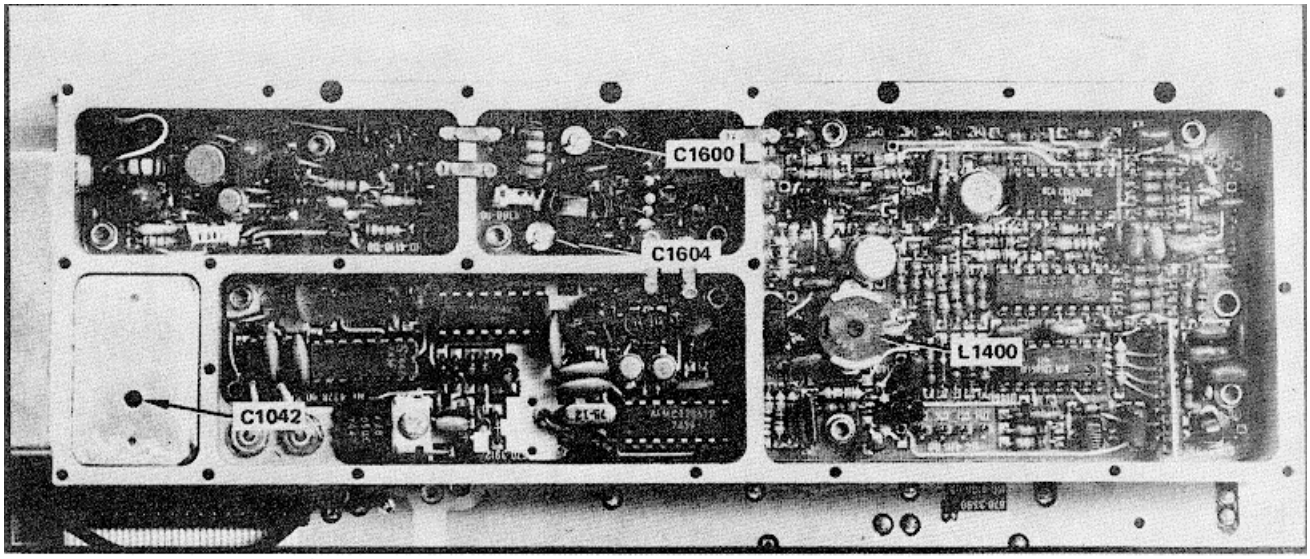

Figure 4-14. Test points and adjustments on the 250 kHz IF Amplifier, 10.8 MHz Input Filter and 2nd Mixer.

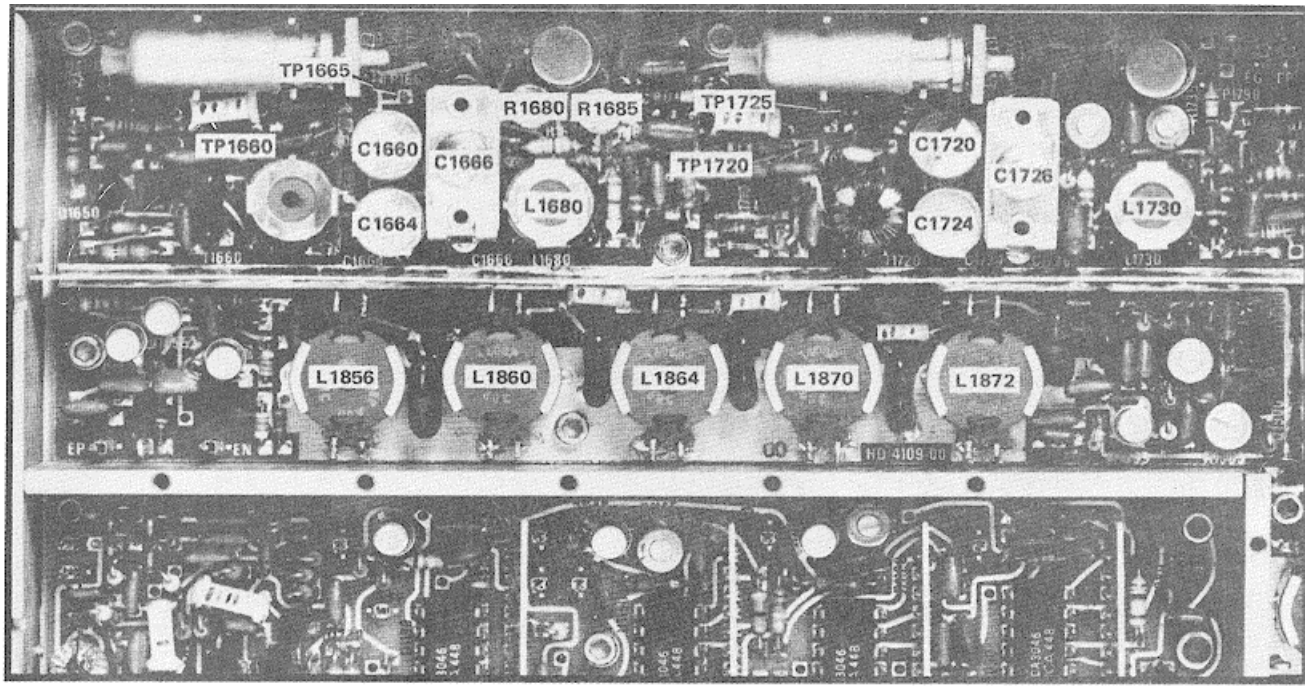

Fig. 4-15.A. Test points and adjustments on the Variable Resolution Board.

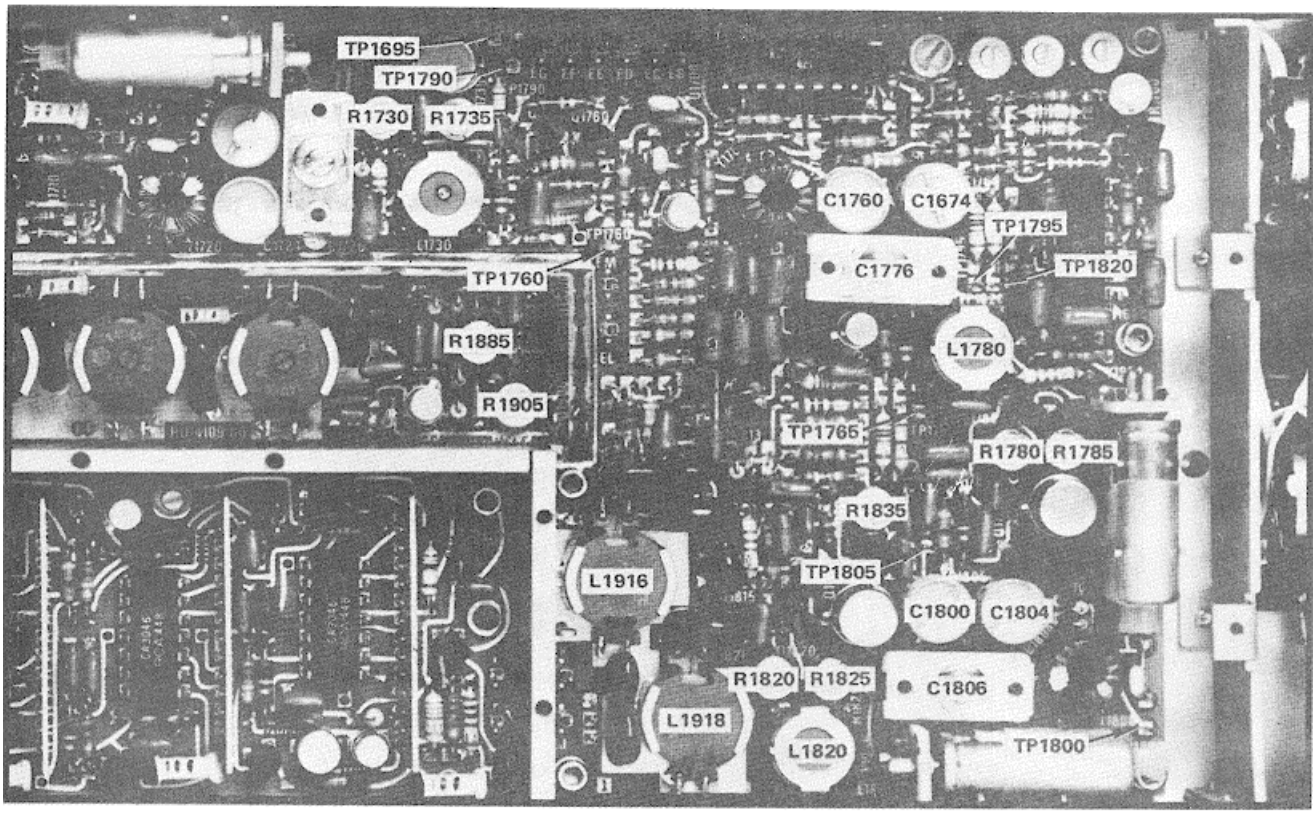

Figure 4-15.B. Test points and adjustments on the Variable Resolution board.

-----3. Install 10 kΩ swamping resistors (Fig. across TP1720-TP1725, TP1760-TP1765, and TP TP1805 (Fig. 4-15).

-----4. Adjust the response symmetry and center frequency of the 1st stage with C1660, C1664, and (Fig. 4-15) as follows'

----- a. Adjust for symmetry, 20 dB down, with C1660 (Fig. 4-17A)

----- b. Adjust for symmetry 2 dB down and response flatness with C1664 then finalize with L1680. Change the Display Mode to 2 dB/DIV and reduce the FREQUENCY SPAN/DIV to observe the response symmetry. The sweep rate must be slow enough to maintain optimum response amplitude as the resolution bandwidth is adjusted. The response must be symmetrical about the DOT (see Fig. 4-17B).

-----5. Adjust R1680 (Fig. 4-15) for bandwidth (1 down) of 3 kHz ±20%.

-----6. Install a swamping resistor across TF1660-TP1665 and remove the swamping resistor across the 2nd stage (TP1720-TP1725).

-----7. Repeat the procedure to align and calibrate the response for the 2nd stage (adjustments C1720, C1724, L1730, and R1730).

-----8. Repeat the procedure to align and calibrate the 3rd and 4th stages, then remove the swamping resistors and check the overall response symmetry and bandwidth. Because of stray capacitance effect, lift the connector on the TP for the gate of the FET or remove the swamping resistors completely before checking the overall response.

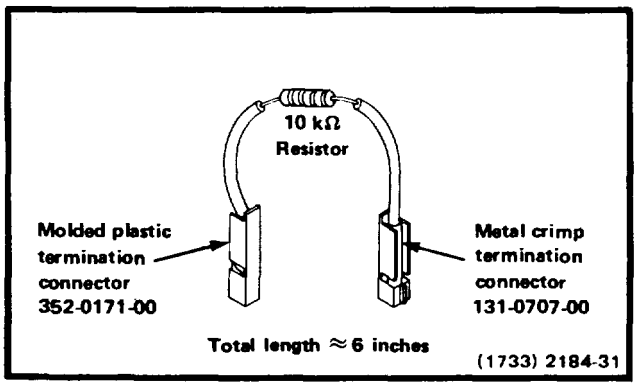

Figure 4-16. Suggested construction of a 10 kΩ swamping resistor calibration fixture.

------9. Trim the response bandwidth and symmetry, if necessary, by spreading the adjustment over all four stages, or repeat the above procedure until the response is satisfactory.

g. ---Calibrate the resolution bandwidth (6 dB down) for the 1 kHz to 30 Hz RESOLUTION positions by decreasing the resolution bandwidth and FREQUENCY SPAN/DIV settings sequentially and adjusting the respective bandwidth with R1700 (1 kHz), R1702 (300 Hz), R1704 (100 Hz), and R1706 (30 Hz). See Fig. 4-18 for adjustment locations.

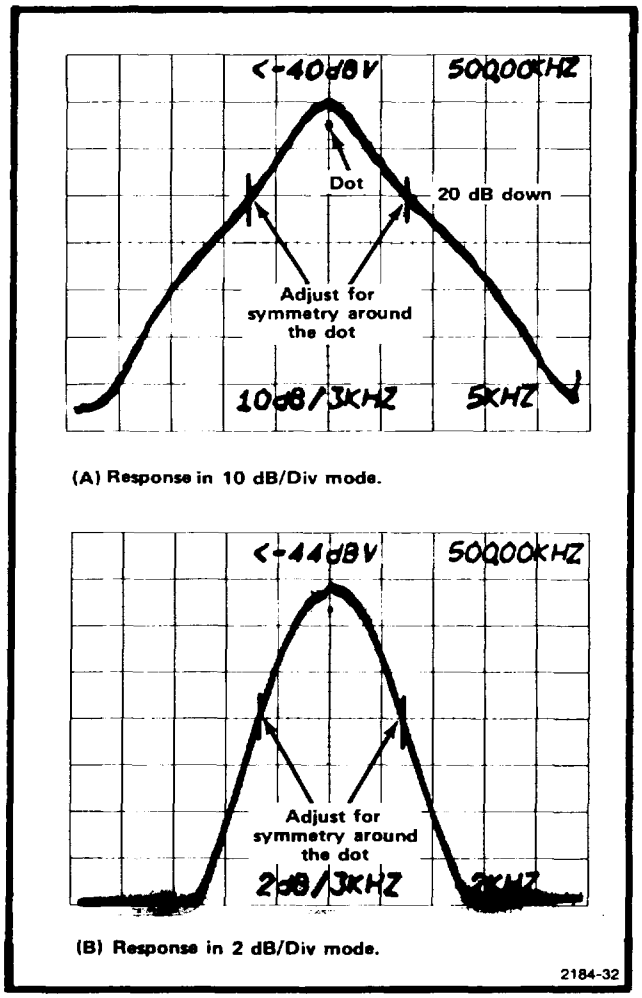

Figure 4-17. Typical responses of a VR stage with all stages swamped.

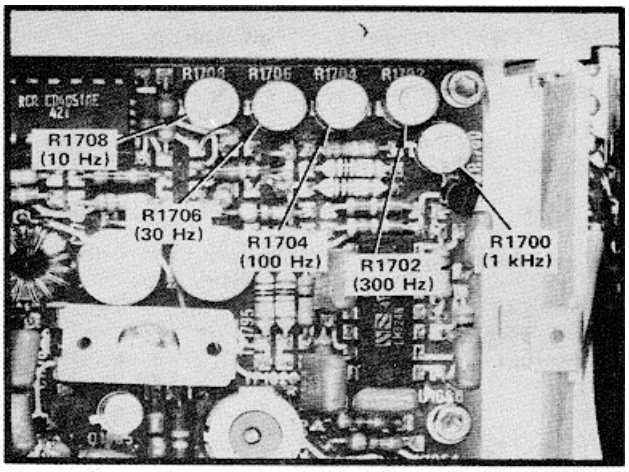

Fig. 4-18. Bandwidth adjustments for Variable Resolution Amplifier.

NOTE

Switch the DIGITAL STORAGE on and reduce the sweep rate to calibrate the narrow resolution settings.

h. --- Switch the RESOLUTION to 10 Hz. Adjust the 10 bandwidth with R1708 (Fig. 4-18) so the bandwidth, 70 down, is 100 Hz ±20 Hz.

i. ---- Calibrate and equalize the VR gain as follows:

----- 1. Install a shorting strap (Fig. 4-19) from TP1790, TP1795, and TP1820 (Fig. 4-15), to chassis ground.

----- 2. Set the RESOLUTION to 3 kHz, FREQUENCY SPAN/DIV to 0, and the REFERENCE LEVEL -40 dBV. Adjust the signal amplitude with the front panel AMPL CAL, on the plug-in module, for an on-screen signal reference level (approximately

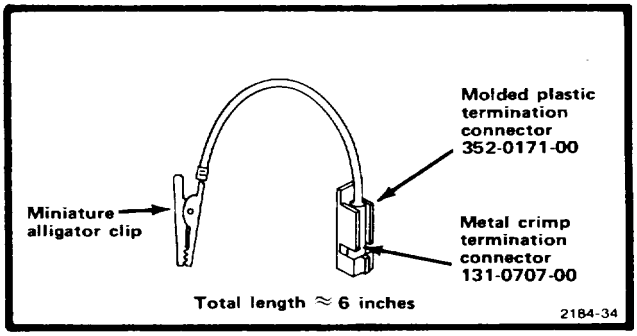

Figure 4-19. Suggested construction for a shorting strap calibration fixture.

------3. Adjust the 1st stage 10 Hz Gain with R1685 (Fig. 4-15) for minimum signal level shift as the RESOLUTION is switched between 3 kHz and 10 Hz positions.

------4. Remove the shorting strap from TP1790 and adjust R1735 (Fig. 4-15) for minimum signal level shift between the 3 kHz and 10 Hz positions of RESOLUTION.

------5. Remove the shorting strap from TP1795 and adjust the3rd stage 10 Hz gain with R1785 for minimum signal level shift between the 3 kHz and 10 Hz RESOLUTION settings.

------6. Remove the shorting strap from TP1820 and adjust R1825 for minimum signal level shift between the 3 kHz and 10 Hz RESOLUTION settings.

------7. Center the AMPL CAL adjustment, on the front panel of the L-Series plug-in module, then with -40 dBV Calibrator signal applied and the REFERENCE LEVEL at -40 dBV, set the RESOLUTION to 30 kHz and adjust the 30 kHz gain with R1905 (Fig. 4-15) for a full screen (8 div) display. Switch the RESOLUTION to 10 kHz and adjust the 10 kHz gain with R1885 (Fig. 4-15) for full screen display. Switch the RESOLUTION to 3 kHz or less and adjust the 10 Hz to 3 kHz gain with R1835 for full screen display.

------8. Replace the rf screen cover over the VR assembly. Check the response shape for a RESOLUTION of 3 kHz. Correct any shift of the response shape and center frequency with adjustments C1664, C1724, C1764, and C1804. C1664 will have the most significant effect on the response. Try to spread the adjustment evenly over the four stages.

9. Digital Storage Calibration

a. --- Preparation: Turn the power off. Remove the Digital Averaging board to gain access to the adjustments on the Digital Storage board. Place the Digital Averaging board alongside or on top of the instrument with a piece of insulation material, such as a sheet of paper, between the ,back of the board and the instrument (Fig. 4-20). This will prevent accidentally grounding the exposed solder points on the circuit board

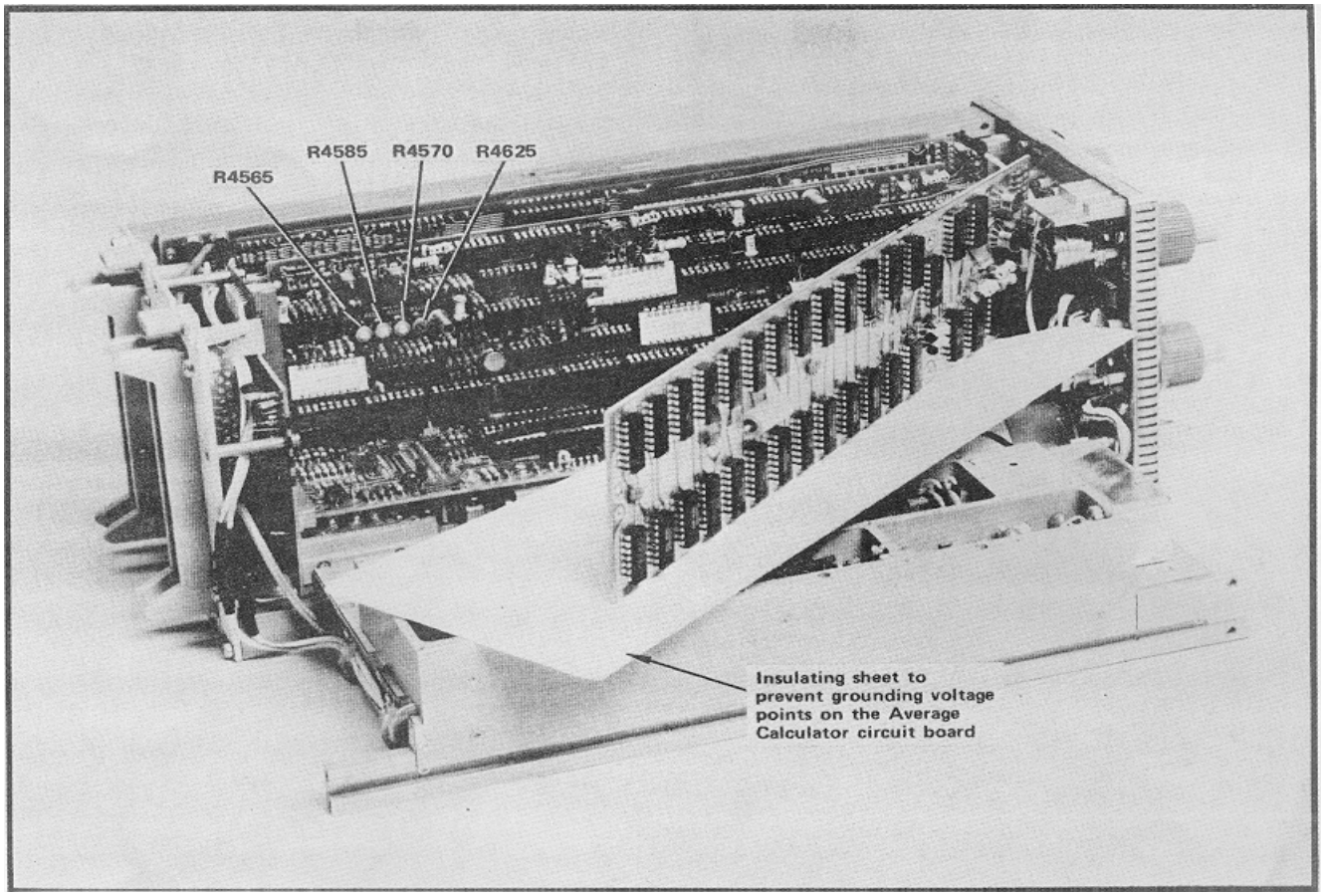

Fig. 4-20. Digital Storage test points and adjustments.

b. --- Set the DOT FREQUENCY to 500.0 kHz, QUENCY SPAN/DIV to MAX, RESOLUTION COUI TIME/DIV .2 s, Display Mode 10 dB/DIV, and switch the DIGITAL STORAGE on.

c. --- Apply the CALIBRATOR signal to the INPUT and adjust the REFERENCE LEVEL to display the 500 kHz markers.

d. --- Adjust R4585 (Fig. 4-20) slowly ccw, from a fully cw position, until all of the display (include the display edges) remain stored at the end of sweep. Turn R4585 slightly past this point to assure stability.

e. --- Increase the sweep rate to 10 ms or 5 ms, then adjust the Horizontal Offset with R4570 (Fig. 4-20) to place the stored 500 kHz marker under the frequency DOT. Check accuracy by switching the DIGITAL STORAGE off and on. The marker location for the non-store and stored displays should be the same.

f. ---- Adjust the Horizontal Gain, with R4625 (Fig. 4-20), so the stored 4500 kHz marker is aligned with the non- store marker. Check the accuracy by switching the DIGITAL STORAGE off and on.

g. --- Change the FREQUENCY SPAN/DIV to 10 k and adjust the REFERENCE LEVEL so the signal amplitude is 7 divisions.

h. --- Adjust the storage Vertical Gain, with R4565 (Fig.4-20) so the amplitude of the stored display and the n store display are the same.

i. ---- Switch the FREQUENCY SPAN/DIV to MAX and recheck to ensure that the display is not erasing at the of sweep.

j. ---- Turn the DIGITAL STORAGE off, the FREQUENCY SPAN/DIV to 50 k and RESOLUTION to 30 k.

k. --- Switch DISPLAY A, SAVE A on. Change the FREQUENCY SPAN/DIV to 20 k, then switch DISPLAY B on and note that both stored displays (A and B) are displayed.

I. ---- Switch DISPLAY A and SAVE A off, adjust the REFERENCE LEVEL so the signal amplitude Is approximately half screen (0 dBV).

m. -- With DISPLAY B on, switch MAX HOLD on and change the REFERENCE LEVEL to increase the signal amplitude. Note that the stored display increases amplitude.

n. --- Now change the REFERENCE LEVEL to decrease the signal amplitude and note that the stored display does not change.

This completes the calibration procedure for the 7L5 Spectrum Analyzer.

CALIBRATION TEST EQUIPMENT REPLACEMENT

Calibration Test Equipment Chart

This chart compares TM 500 product performance to that of older Tektronix equipment Only those characteristics where significant specification differences occur, are listed. In some cases the new Instrument may not be a total functional replacement. Additional support Instrumentation may be needed or a change In calibration procedure may be necessary.

Comparison of Main Characteristics

DM 501 replaces 7D13					
PG 501 replaces	107	PG 501 -	Risetime less than 3.5 ns into Ω.	107-	Risetime less than 3.0 ns into 50Ω.
	108	PG 501 -	5 V output pulse, 3.5 ns Risetime.	108 -	10 V output pulse, 1 ns Risetime
	111	PG 501 -	Risetime less than 3.5 ns, 8 ns Pretrigger Pulse delay	111 -	Risetime 0 5 ns, 30 to 250 ns Pretrigger pulse delay.
	114	PG 501 -	±5 V output.	114 -	±10 V output Short proof output
	115	PG 501 -	Does not have Paired, Burst, Gated, or Delayed pulse mode, ±5 V dc Offset. Has ±5 V output.	115 -	Paired, Burst, Gated and Delayed pulse mode, 10 V output Short-proof output.
PG 502 replaces	107				
	108	PG 502 -	5 V output	108 -	10 V output
	111	PG 502 -	Risetime less than 1 ns; 10 ns Pretrigger pulse delay	111 -	Risetime 0 5 ns, 30 to 250 ns Pretrigger pulse delay.
	114	PG 502 -	±5 V output	114 -	10 V output. Short proof output
	115	PG 502 -	Does not have Paired, Burst, Gated, Delayed & Undelayed pulse mode; Has +5 V output.	115 -	Paired, Burst, Gated, Delayed & Undelayed pulse mode, ±10 V output Short-proof output
	2101	PG 502 -	Does not have Paired or Delayed pulse Has ±5 V output.	2101	Paired and Delayed pulse; 10 V output.
PG 506 replaces 106		PG 506 -	Positive-going trigger output signal at least 1 V, High Amplitude output, 60 V.	106 -	Positive and Negative-going trigger output signal, 50 ns and 1 V, High Amplitude output, 100 V
	067-0502-01	PG 506 -	Does not have chopped feature.	0502-1 -	Comparator output can be alternately chopped to a reference voltage.
SG 503 replaces 190					
	190A, 190B	SG 503 -	Amplitude range 5 mV to 5.5 V p-p.	190B -	Amplitude range 40 mV to 10V p-p
	191	SG 503 -	Frequency range 250 kHz to 250 MHz	191 -	Frequency range 350 kHz to 110 MHz
	067-0532-01	SG 503 -	Frequency range 250 kHz to 250 MHz	0532-01 -	Frequency range 3350 kHz to 100 MHz.
TG 501 replaces 180,					
	180A	TG 501 -	Marker outputs, 5 sec to 1 ns. Sinewave available at 5, 2, and 1 ns. Trigger output - slaved to marker output from 5 sec through 100 ns. One time-mark can be generated at a time.	180A -	Marker outputs, 5 sec to 1 µs. Sinewave available at 20, 10, and 2 ns. Trigger pulses 1, 10, 100 Hz; 1, 10, and 100 kHz. Multiple time-marks can be generated simultaneously.
	181	TG 501 -	Marker outputs, 5 sec to 1 ns. Sinewave available at 5, 2, and 1 ns.-	181 -	Marker outputs, 1, 10, 100, 1000, and 10,000 ,s, plus 10 ns sinewave.
	184	TG 501 -	Marker outputs, 5 sec to 1 ns. Sinewave available at 5, 2. and 1 ns. Trigger output slaved to marker output from 5 sec through 100 ns. One time-mark can be generated at time.	184 -	Marker outputs, 5 sec to 2 ns Sinewave available at 50, 20, 10, 5, and 2 ns. Separate trigger pulses of 1 and .1 sec; 10, 1, .1 ms; 10 and 1 µs. Marker amplifier provides positive or negative time marks of 25 V min. Marker intervals of 1 and .1 ms; 10and 1 µs.
	2901	TG 501 -	Marker outputs, 5 sec to 1 ns. Sinewave available at 5, 2, and 1 ns. Trigger output - slaved to marker output from 5 sec through 100 ns. One time-mark can be generated at a time.	2901 -	Marker outputs, 5 sec to 0.1 µs. Sinewave available to 50, 10, and 5 ns. Separate trigger pulses, from 5 sec to 0.1 µs. Multiple time-marks ca be generated simultaneously.

NOTE: All TM 500 generator outputs are short-proof. All TM 500 plug-in Instruments require TM 500-Serles Power Module.

SECTION 5. MAINTENANCE

Introduction

This section describes procedures for reducing or preventing instrument malfunction plus troubleshooting and corrective maintenance. Preventive maintenance proves instrument reliability. Should the instrument function properly, corrective measures should be immediately; otherwise, additional problems may develop within the instrument.

CAUTION

STATIC DISCHARGE CAN DAMAGE MANY SEMICONDUCTOR COMPONENTS USED IN THIS INSTRUMENT.

Many semiconductor components, especially, MOS types can be damaged by static discharge. Damage may not be catastrophic, therefore, immediately apparent. It usually appears at "weakening" of the semiconductor characteristic Devices that are particularly susceptible are: Me CMOS, J FET's, and high impedance OP am Damage can be significantly reduced by observing the following precautions.

1. --- Handle static sensitive components or circuit assemblies at or on a static free surface. Work station areas should contain a static free bench cover or work plane such as, conductive polyethylene sheeting and a grounding wrist strap. The work plane should be connected to earth ground.

2. --- All test equipment, accessories, and soldering tools should be connected to earth ground.

3. --- Minimize handling by keeping the components in their original containers until ready for use. Minimize the removal and installation of semiconductors from their circuit boards.

4. --- Hold the IC devices by their body rather than the terminals.

------5. Use containers made of conductive material or filled with conductive material for storage and transportation. Avoid using ordinary plastic containers. Any static sensitive part or assembly (circuit board) that is to be returned to Tektronix, Inc.; should be packaged in its original container or one with anti-static packaging material.

PREVENTIVE MAINTENANCE

Preventive maintenance consists of cleaning, visual inspection, performance check, and if needed, a recalibration. The preventive maintenance schedule that is established for the instrument should be based on the environment in which the instrument is operated and the amount of use. Under average conditions (laboratory situation) a preventive maintenance check should be performed every 1000 hours of instrument operation.

Cleaning

Clean the instrument often enough to prevent dust or dirt from accumulating in or on it. Dirt acts as a thermal insulating blanket and prevents efficient heat dissipation. It also provides high resistance electrical leakage paths between conductors or components in a humid environment.

Exterior. Clean the dust from the outside of the instrument by wiping or brushing the surface with a soft cloth or brush. The brush will remove dust from around the front panel selector buttons Hardened dirt may be removed with a cloth dampened in water that contains a mild detergent. Abrasive cleaners should not be used.

Interior. Normally the interior of the instrument will not require cleaning unless it has been left out of the oscilloscope plug-in compartment and uncovered for an extended period of time. Clean the interior by loosening accumulated dust with a dry soft brush, then blow the loosened dirt away with low pressure air (high velocity air can damage some components). If the circuit board assemblies need cleaning, remove the circuit board by referring to the instructions under Corrective Maintenance in this section. Hardened dirt or grease may be removed with a cotton tipped applicator dampened with a solution of mild detergent in water. Do not leave detergent on critical memory components. Abrasive cleaners should not be used.

After cleaning, allow the interior to thoroughly before applying power to the instrument

CAUTION

Do not allow water to get inside any enclosed assembly or components, such as the photo-optic switch assemblies, memory capacitors, potentiometers, etc. Instructions for removing assemblies for maintenance are provided in the Corrective Maintenance section. Do not clean any plastic materials with organic cleaning solvents such as benzene, toluene, xylene, acetone or similar compounds because they may damage the plastic.

Lubrication

No assemblies or components in this instrument require lubrication.

Visual Inspection

After cleaning, carefully check the instrument for such defects as defective connections, damaged parts, and improperly seated transistors and integrated circuits. The remedy for most visible defects is obvious, however heat-damaged parts are discovered, try to determine cause of overheating before the damaged part is replaced otherwise the damage may be repeated.

Transistor and Integrated Circuit Checks

Periodic checks of the transistors and integrated circuits-are not recommended. The best measure performance is the actual operation of the component the circuit. Performance of these components thoroughly checked during the performance check recalibration, and any substandard transistors or integrated circuits will usually be detected at that time.

TROUBLESHOOTING

The following are a few aids and suggestions that may assist in locating a problem. After athe defective assembly or component has been located, refer to the Correct Maintenance part of this section for removal and replacement instructions.

Troubleshooting Aids

Diagrams. Circuit diagrams are given on foldout pages in the Diagrams section of the manual. The circuit number and electrical value of each component is shown on the diagrams (see the first tab page for definition of the reference symbology used to identify components in each circuit). Each main circuit is assigned a series of come nent numbers Refer to the Replaceable Electrical Parts list section for a complete description of each component and assembly Those portions of the circuit that are on circuit boards are enclosed with a black border line with the name and assembly number shown on the border

NOTE

Corrections and modifications to the manual and instrument are described on inserts bound into the rear of the manual. Check this section for manual instrument changes and corrections.

Circuit Board Illustrations. Electrical components, connectors, and test points are identified on circuit board illustrations located on the inside fold of the corresponding circuit diagram or the back of the preceding diagram. This allows cross-reference between the diagram and the circuit board, and shows the physical location of components.

Wire Color Code. Color-coded wires are used to aid circuit tracing. Power supply dc voltage leads have either a red background for positive voltage or a violet background for negative voltage Signal wires and coaxial cables use an identifying one-band or two-band color code.

Connectors: (Movable and Fixed).

Multiple Terminal (Harmonica) Connector Holders: The multi-connector holder is keyed with a triangle; one on the holder and one on the circuit board. When a connection is made perpendicular to a circuit board surface, the orientation of the triangle and the slot numbers on the connector holder are determined by the direction of the nomenclature marking (see Fig 5-1). All harmonica connectors are identified on the schematic and board with the prefix “P”.

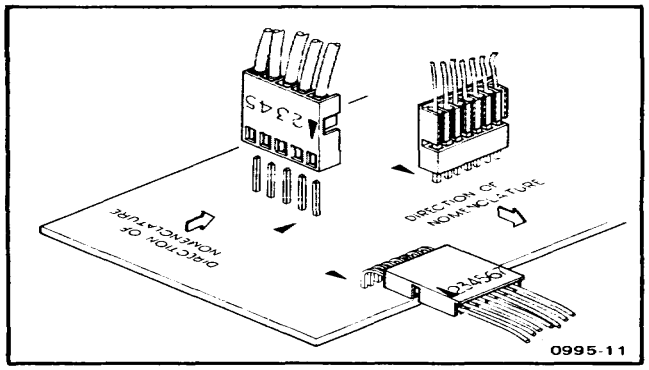

Fig. 5-1. Multipin (harmonica) circuit board connectors.

Square-pin and Edge Connectors: Interface connectors between circuit boards are identified with alphabetic letters. Interface connectors to the mainframe use an alpha prefix for the left (A) or right (B) side followed by a numeral (e.g., B17, A6).

Capacitor Marking. The capacitance value of common disc capacitors and some electrolytics are marked in microfarads on the side of the component body. The white ceramic capacitors are color-coded in picofarads. Tantalum capacitors are color-coded as shown in Fig. 5-2.

Diode Code. The cathode of each glass-encased diode is indicated by a stripe, a series of stripes, or a dot. Some diodes have a diode symbol printed on one side. Fig. 5-3 illustrates diodes types and polarity markings that are used in this instrument.

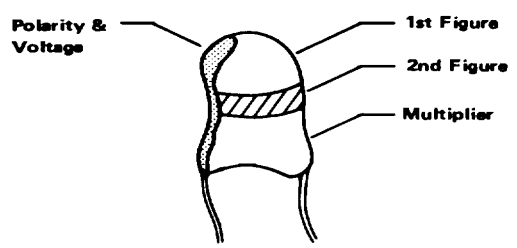

DIPPED TANTALUM CAPACITOR MARKING

A AND B CASE

CAPACITANCE AND VOLTAGE COLOR CODE

Rated Voltage VDC 25°C	Color	CODE FOR CAPACITANCE IN PICOFARADS		
		1st Figure	2nd Figure	Multiplier
3-4	Black	0	0	None
3-6	Brown	1	1	$\times 10$
3-10	Red	2	2	$\times 10^2$
3-15	Orange	3	3	$\times 10^3$
3-20	Yellow	4	4	$\times 10^4$
3-25	Green	5	5	$\times 10^5$
3-35	Blue	6	6	$\times 10^6$
3-50	Violet	7	7	$\times 10^7$
	Gray	8	8	
3	White	9	9	

(1733) 1735-9

Fig. 5-2. Color code for some tantalum capacitors.

Transistor and Integrated Circuit Electrode Configuration. Lead identification for the transistors is shown in Fig. 5-4. IC pin-out diagrams are shown, when necessary, on the back of the adjoining pullout schematic diagram.

Finding Faulty Semiconductors

Semiconductor failures account for the majority of electronic equipment failures. Most semiconductor devices (transistors and IC's) are socket-mounted. Substitution is often the most practical means for checking their performance. The following guidelines should be followed when substituting these components:

a. ---First determine that circuit voltages are safe for the substituted component so the replacement will not be damaged.

b. ---Use only good components for substitution.

c. ---Turn the power off before a component is substituted and maintain a static-free environment (see CAUTION under IC Checks).

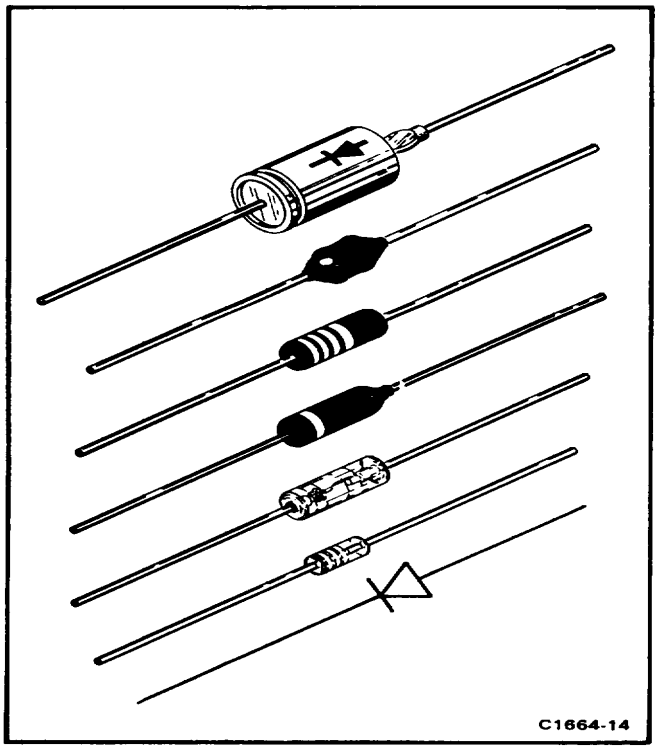

Figure 5-3. Diode Polarity markings.

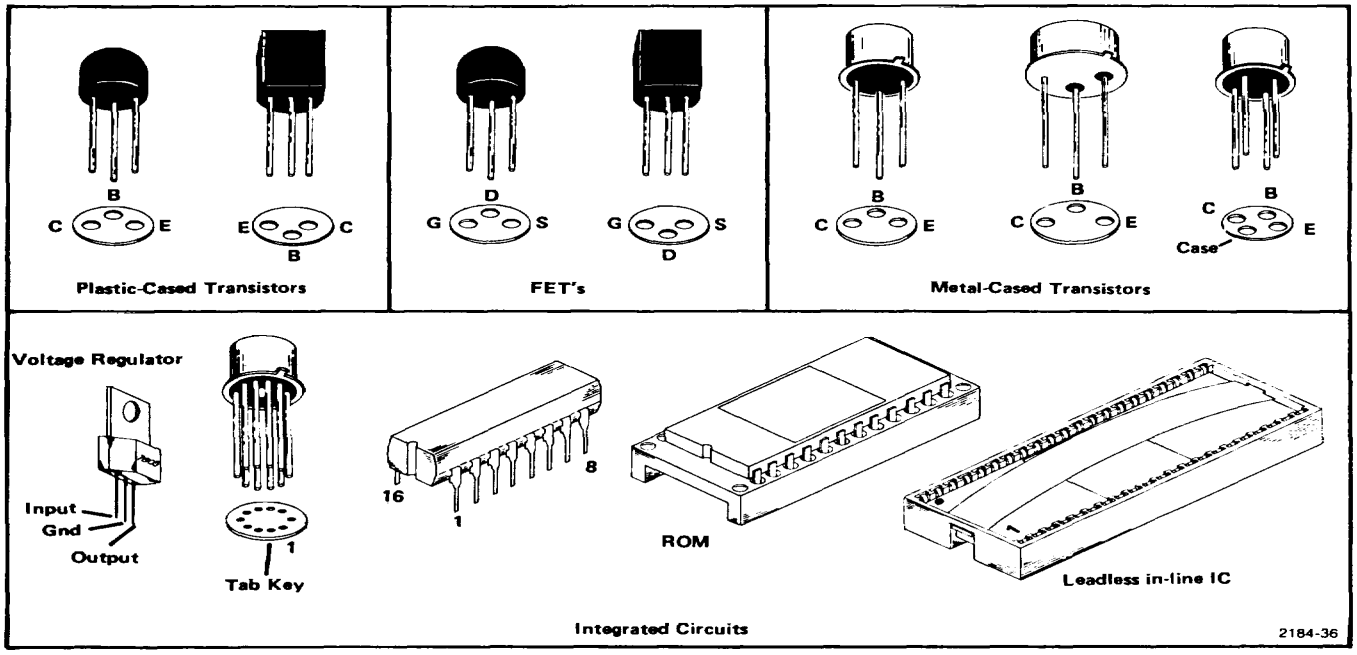

Fig. 5-4. Electrode configuration for semiconductor components.

d. --- Be sure the component (transistor or IC) is insert properly in the socket (see Fig. 5-4 or the manufacture data sheet).

e. --- After the operational check, return the good components to their original sockets to reduce calibration time and run-in period.

NOTE

If a substitute is not available, check the transistor with a dynamic tester such as the Tektronix Type 576 Curve Tracer or 5CTIN Curve Tracer for the 5000-Series mainframe. Static-type testers, such as an ohmmeter, can be used to check the resistance ratio across some semiconductor junctions if no other method is available. Use the high resistance ranges (R X 1 k or higher) so the external test current is limited to less than 6 mA. If uncertain, measure the external test current with an ammeter. Resistance ratios across base-to-emitter or base-to-collector junctions usually run 100:1 or higher. The ratio is measured by connecting the meter leads across the terminals, noting the reading, then reversing the leads and noting the second reading.

Diode Checks. Most diodes can be checked in the circuit by taking measurements across the diode and comparing these with voltages listed on the diagram. Forward-to-back resistance ratios can usually be taken by referring to the schematic and pulling appropriate transistors and pin connectors to remove low resistance loops around the diode.

CAUTION

Do not use an ohmmeter scale with a high external current to check the diode junction.

Integrated Circuit (IC) Checks. Integrated circuits are most easily checked by direct replacement. When substitution is impossible, check input and output signal states as described in the Circuit Description and on the diagram. Lead configuration and data for the IC's, used in this instrument, are provided on the inside fold of the schematic or the back of the previous schematic.

CAUTION

To avoid possible damage from static changes, handle all IC's in accordance with the instructions as previously described at the beginning of this section.

Check calibration and performance after a faulty component has been replaced.

If the above procedure fails to locate the trouble, a detailed analysis must be performed. The Circuit Description section describes the operational theory of circuit and may aid to further evaluate the problem

General Troubleshooting Techniques

The following procedure is recommended to isolate a problem and expedite repairs.

1. Ensure that the malfunction exists in the instrument. Check the operation of associated equipment and operating procedure for the 7L5 (see Operating Instructions).

2. Determine and evaluate all trouble symptoms. Try to isolate the problem to a circuit or assembly. The block diagram in the Diagrams section can aid in signal tracing and circuit isolation. It and the diagrams show the signal levels required (at various points) to produce full screen deflection.

CAUTION

Exercise extreme care when placing meter leads probes for voltage or waveform measurements. An inadvertent movement of the leads or probe in a high density area or section with limited access could cause a short circuit and produce transient voltages which can destroy many components.

3. Make an educated guess as to the nature of the problem, such as component failure or calibration, an functional area most likely at fault.

4. Visually inspect the area or the assembly for defects as broken or loose connections, improperly seated components, overheated or burned components, chafed insulation, etc. Repair or replace all obvious defects. In the case of overheated components, try to determine the cause of the overheated condition correct before applying power.

5. By successive electrical checks, locate the problem. At this time an oscilloscope is a valuable test item for evaluating circuit performance. If applicable, check the calibration adjustments. Before changing an adjustment, note its position so it can be returned to the original setting. This will facilitate recalibration after the trouble has been located and repaired.

6. Determine the extent of the repair needed; if complex, we recommend contacting your local Tektronix Field Office or representative. If the damage is minor, such as a component replacement, see the Parts List for replacement information. Removal and replacement procedures of the assemblies and sub-assemblies are described under Corrective Maintenance.

CORRECTIVE MAINTENANCE

Corrective maintenance consists of component replacement and instrument repair. Special techniques and procedures required to replace components in this instrument are described here.

Obtaining Replacement Parts

Most electrical and mechanical parts are available through your local Tektronix Field Office or representative. The Parts List section contains information on how to order these replacement parts. Many standard electronic components can be obtained locally in less time than that required to order from Tektronix, Inc. It is best to duplicate the original component as closely as possible. Parts orientation and lead dress should be duplicated because orientation may affect circuit interaction.

If a component you have ordered has been replaced with a new or improved part, your local Field Office or representative will contact you concerning the change in the part number. After repair, the circuits may need recalibration.

Parts Repair and Exchange Program

Tektronix repair centers provide replacement or repair service on major assemblies as well as the unit. Return the instrument or assembly to your local Field Office for this service.

Refer to Repackaging For Shipment instructions (in Section 1) before shipping the instrument.

Soldering Technique

CAUTION

Disconnect the instrument from its power source before replacing or soldering components.

Because it is easy to damage the plating in the holes that the component is soldered to, we recommend cutting the old component free and leaving some length to solder the new component leads to. If the leads are pulled through, use caution when pulling through the plated hole. Excessive heat or bent lea damage the plating. Use a 15 watt pencil-type iron, straighten the leads on the back side of the board, then when the solder melts, gently pull the soldered through the hole. A desoldering tool should be used to remove the old solder.

Transistor and Integrated Circuit Replacement

Transistors and IC's should not be replaced unless they are actually defective. When removed from their sockets during routine maintenance, return them to their original sockets. Unnecessary replacement or switching semiconductor devices may affect the instrument adjustment. When an active device is replaced, check the operation of the circuit affected.

CAUTION

The POWER switch must be turned off be removing or replacing semiconductors and observe static discharge caution at the beginning of section.

Replacement semiconductors should be of the c type or a direct replacement. Fig. 5-4 shows the configuration of the semiconductors used in this instrument.

An extracting tool should be used to remove the 14-pin integrated circuits to prevent damage to the pins. This tool is available from Tektronix, Inc. Order Tektronix Part No. 003-0619-00. If an extracting tool is not available, use care to avoid damaging the pins. Pull slowly and evenly ends of the IC. Try to avoid having one end of the IC disengaged from the socket before the other end

Replacing Square-pin for the Multi-pin Connectors and Circuit Boards

NOTE

A pin replacement kit (including necessary tools, instructions, and replacement pins) is available from Tektronix, Inc. Order Tektronix Part No. 040-0542- 00.

It is important not to damage or disturb the ferrule when removing the old stub of a broken pin. The ferrule is pressed into the circuit board and provides a base for soldering the pin connector.

If the broken stub is long enough, grasp it with needle-nose pliers, apply heat with a small soldering iron to the pin base of the ferrule, and pull the old pin out. If the broken stub is too short to grasp with pliers, use a small dowel (0.028 inch diameter) to push the pin out. Use a pair of diagonal cutters to remove the ferrule from the new pin, and then insert the pin into the old ferrule and solder to both sides of the ferrule.

The pin sockets on the circuit boards are soldered to the rear of the board. Unsolder the pin, then straighten the tabs on the socket and remove it from the hole in the circuit board. Place the new socket in the circuit board hole and press the tabs down against the board. Solder the tabs of the socket to the circuit board; be careful not to get solder into the socket.

NOTE

The spring tension of the pin sockets ensures a good connection between the circuit board and the pin. This spring tension can be destroyed by using the pin sockets as a connecting point for spring-loaded probe tips, alligator clips, etc.

Interconnecting Cable and Pin Connector Replacement

The interconnecting cable assemblies are factory assembled. They consist of machine installed pin connectors mounted in plastic holders. The plastic holders are easily replaced as individual items, but if the connectors are faulty the entire cable should be replaced.

It is possible for the pin connectors to become dislodged from the plastic holders. If this happens, the connector can be reinstalled as follows (see Fig. 5-5).

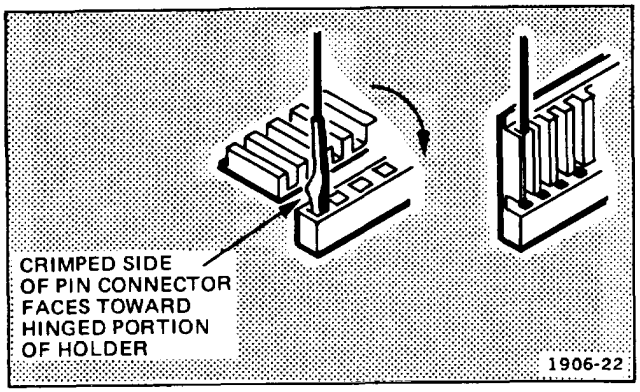

Fig. 5-5. Pin connector replacement.

1. Bend grooved portion of holder away from cable shown.

2. Re-insert the connector into its hole in the plug-portion of the holder. Wires are positioned in the hold according to color-code system.

NOTE

Holder positions are numbered (number one is identified with a triangle). The wires are EIA color coded to match the numbers on the holder. For example, brown stripe for position 1 (triange), red stripe for position 2, yellow stripe for position 4, etc.

3. Bend grooved part of holder so that connector inserted into groove.

When plugging connector holders onto board pins, sure to match the triangle mark on the holder with the triangle mark on the circuit board.

DISASSEMBLY OF THE 7L5 and REPLACING ASSEMBLIES

The following describes how to remove the major assemblies and circuit boards within the instrument. Refer to Fig. 4-1 for board and assembly identification. T exploded drawing in the Replaceable Mechanical Pa section may also help illustrate how the instrument assembled.

1. Removing the Front Panel

a. Unscrew and remove the plug-in module "release" knob located below the plug-in compartment.

b. Use a 0.05 inch Allen wrench to loosen the two set- screws that hold the front panel to the upper and lower wall of the Reference Module (honeycomb) assembly. See Fig. 5-6A.

c. Remove the two flat-head screws that hold the top rail of the IF Module assembly to the front panel (Fig. 5- 6A), then remove the two screws that secure the top rail to the back (rear) panel (on the right side as viewed from the rear). This will allow the IF Module assembly to swing out and down (Fig. 5-6C).

d. Turn the instrument on its side. Disconnect the return spring for the 7L5 "pull to release" knob located on the underside of the instrument (Fig. 5-6B).

e. Use the Allen wrench to loosen the set-screw that holds the bottom hinge of the IF Module assembly to the front panel extrusion (Fig. 5-6B).

f. Remove the front panel by pulling it away from the other assemblies with a slight wobbling motion to loosen the connectors. When the board connectors are free, unplug the coaxial connector from the rear of the CALIBRATOR connector.

2. Removing the IF Module Assembly (Variable Resolution, 250 kHz, IF, Log/Lin Amplifier, etc.)

a. Repeat the procedure in steps la through 1e.

b. Unplug the ribbon connector at the IF Module mother board and the three coaxial connectors near the rear hinge (Fig. 5-6C). Remove the rear hinge screw.

c. Carefully slip the assembly out and back, to free the front hinge pin from the front panel extrusion, then remove the assembly.

3. Removing the Digital Averaging and Digital Storage Circuit Boards

a. Repeat the procedure for steps la through 1c.

b. Remove the three screws through the Digital Averaging and Digital Storage boards (Fig. 5-6C).

c. Carefully lift the Digital Averaging board out as far as its ribbon cable will permit, then remove the Digital Storage board by lifting it straight off its interconnecting pins.

d. Unplug the multi-pin ribbon connector from the Digital Averaging board.

4. Removing the Sweep Board

a. Remove the Digital Averaging and Digital Storage boards, then the front panel as previously described.

b. Unplug and remove the Sweep board.

NOTE

To apply power to the Sweep board for servicing, re- install the front panel assembly and reconnect the coaxial cable to the CALIBRATOR connector. Plug the 7L5 through a flexible extender cable into the mainframe vertical and horizontal connectors. Turn the power on.

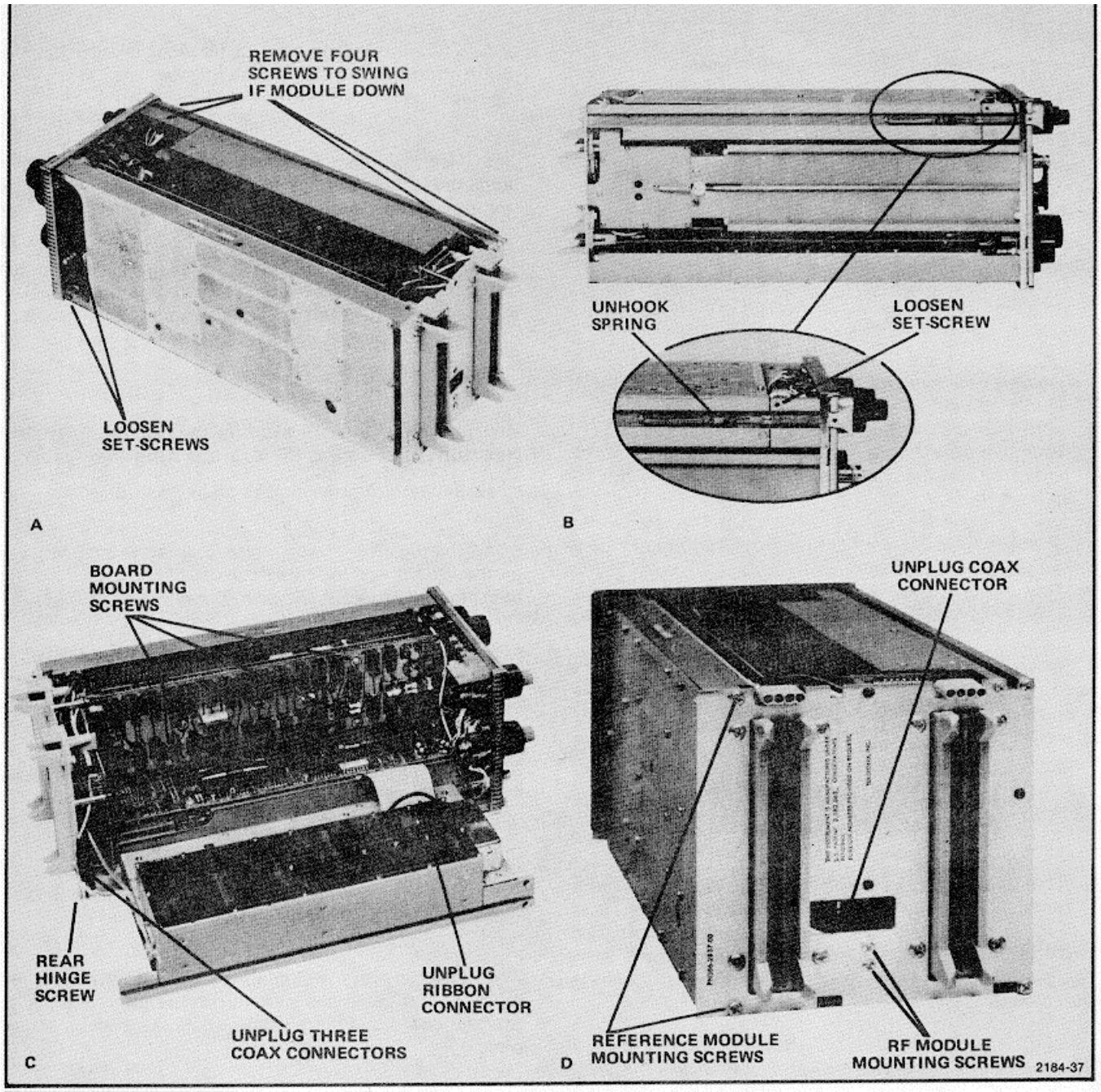

Fig. 5-6. 7L5 circuit board and assembly identification and location of holding setscrews.

5. Removing the RF Module (Vertical Control Board and 1st LO Assembly)

a. Remove the Digital Averaging and Digital Storage circuit boards then remove the Front Panel assembly

b. Use a pair of needle-nose pliers to reach through the opening in the rear panel and disconnect the coaxial connector to the 1st LO Module (Fig. 5-6D). Now connect the coaxial connector for the cable from the IF Module Assembly to the semi-rigid coaxial cable for 1st LO Module.

c. Remove the two screws that hold the module to back panel (Fig. 5-6D).

d. Remove the assembly by pulling it straight out free (nearly) the Vertical Control board edge connector then raise the assembly slightly while pressing down the rear (through the cut-out in the rear panel) to clear two coaxial connectors at the rear of the 1st LO Mod Once the assembly is disengaged, unplug the wire cable to free it entirely. Note the location and orientation of cable connectors to aid in reassembly.

6. Removing the Transverse Interface Circuit Bo

a. Remove the RF Module assembly and the IF Module assembly.

b. Remove the three screws that hold the board to the posts on the rear panel (Fig. 5-6D).

c. Remove the board by pulling straight out from its connector.

CAUTION

Avoid damaging the flexible interface circuit board that is attached from the Transferse Interface board to the rear interface plug-in connector. Before re-installing the board, check cable dress behind the board. This will facilitate connection later.

7. Removing the Reference Module

a. Remove the front panel, IF Module, Digital Averaging and Storage board, Sweep board, RF Module, and Transverse Interface board (steps 1 through 6).

b. Remove the Reference Module mounting screws (Fig. 5-6C) and coaxial cables.

REASSEMBLING THE 7L5

Reassembly is, in general, the reverse of disassembly. The following steps are intended only as a brief guide.

1. Reconnect the two cables (coaxial and wire) from the RF Module assembly. It may be necessary to temporarily remove the Transverse Interface circuit board assembly to gain access to the connectors.

2. Re-install the Transverse Interface circuit board assembly and replace the three screws that hold it to the back panel.

3. Re-install the RF Module assembly. Replace the two screws that hold it to the back panel.

4. Align the interconnect pins and receptacles between the Sweep board and the Digital Storage board, then gently press the board in place. Secure the Digital boards by installing the three mounting screws.

5. Re-install the front panel assembly and reconnect the CALIBRATOR coaxial connector.

6. Re-install the hinged IF Module assembly and reconnect the three coaxial connectors.

7. Replace the RF Module latch rod, the plug-in (7L5) knob spring, and tighten the three Allen screws that were loosened to remove the front panel.

SECTION 6. OPTION INFORMATION

Options for the 7L5, such as Options 21, 25, 28, 30, 31, etc. are documented in a supplemental manual. This manual is included with the 7L5 Operating and Service manual if your instrument is so equipped.

SECTION 7. REPLACEABLE ELECTRICAL PARTS

PARTS ORDERING INFORMATION

Replacement parts are available from or through your local Tektronix, Inc. Field Office or representative

Changes to Tektronix instruments are sometimes made to accommodate Improved components as they become available, and to give you the benefit of the latest circuit improvements developed in our engineering department. It is therefore important, when ordering parts, to include the following information in your order Part number, instrument type or number, serial number, and modification number if applicable

If a part you have ordered has been replaced with a new or Improved part, your local Tektronix, Inc Field Office or representative will contact you concerning any change in part number

Change information, if any, is located at the rear of this manual.

SPECIAL NOTES AND SYMBOLS

X000	Part first added at this serial number
00X	Part removed after this serial number

ITEM NAME

In the Parts List, an Item Name is separated from the description by a colon (:). Because of space limitations, an Item Name may sometimes appear as incomplete For further Item Name identification, the U S. Federal Cataloging Handbook H6-1 can be utilized where possible.

ABBREVIATIONS

ACTR	ACTUATOR	PLSTC	PLASTIC
ASSY	ASSEMBLY	QTZ	QUARTZ
CAP	CAPACITOR	RECP	RECEPTACLE
CER	CERAMIC	RES	RESISTOR
CKT	CIRCUIT	RF	RADIO FREQUENCY
COMP	COMPOSITION	SEL	SELECTED
CONN	CONNECTOR	SEMICOND	SEMICONDUCTOR
ELCTLT	ELECTROLYTIC	SENS	SENSITIVE
ELEC	ELECTRICAL	VAR	VARIABLE
INCAND	INCANDESCENT	WW	WIREWOUND
LED	LIGHT EMITTING DIODE	XFMR	TRANSFORMER
NONWIR	NON WIREWOUND	XTAL	CRYSTAL

CROSS INDEX MFR. CODE NUMBER TO MANUFACTURER

MFR.CODE	MANUFACTURER	ADDRESS	CITY,STATE,ZIP
00779	AMP, INC.	P. O. BOX 3608	HARRISBURG, PA 17105
00853	SANGAMO ELECTRIC CO., S. CAROLINA DIV.	P. O. BOX 128	PICKENS, SC 29671
01121	ALLEN-BRADLEY CO.	1201 2ND ST. SOUTH	MILWAUKEE, WI 53204
01295	TEXAS INSTRUMENTS, INC., SEMICONDUCTOR GROUP	P. O. BOX 5012	DALLAS, TX 75222
02735	RCA CORP., SOLID STATE DIVISION	ROUTE 202	SOMERVILLE, NY 08876
04222	AVX CERAMIC CORP.	P. O. BOX 867	MURTLE BEACH, SC 29577
04713	MOTOROLA, INC., SEMICONDUCTOR PRODUCTS DIV.	5005 E. MCDOWELL RD.	PHOENIX, AZ 85036
07263	FAIRCHILD SEMICONDUCTOR, A DIV. OF FAIRCHILD CAMERA AND INSTRUMENT CORP.	464 ELLIS ST.	MOUNTAIN VIEW, CA 94042
07910	TELEDYNE SEMICONDUCTOR	12515 CHADRON AVE.	HAWTHORNE, CA 90250
08806	GENERAL ELECTRIC CO., MINIATURE LAMP PRODUCTS DEPT.	NELA PK.	CLEVELAND, OH 44112
09023	CORNELL-DUBILIER ELECTRONIC DIVISION FEDERAL PACIFIC ELECTRIC CO.	2652 DALRYMPLE ST.	SANFORD, NC 27330
10389	CHICAGO SWITCH, INC.	2035 WABANSIA AVE.	CHICAGO, IL 60647
12040	NATIONAL SEMICONDUCTOR CORP.	COMMERCE DRIVE	DANBURY, CT 06810
12697	CLAROSTAT MFG. CO., INC.	LOWER WASHINGTON ST.	DOVER, NH 03820
13715	FAIRCHILD SEMICONDUCTOR, A DIV. OF FAIRCHILD CAMERA AND INSTRUMENT CORP.	4300 REDWOOD HWY.	SAN RAFAEL, CA 94903
14329	WELLS ELECTRONICS, INC.	1701 SOUTH MAIN ST.	SOUTH BEND, IN 46613
15818	TELEDYNE SEMICONDUCTOR	1300 TERRA BELLA AVE.	MOUNTAIN VIEW, CA 94040
17856	SILICONIX, INC.	2201 LAURELWOOD RD.	SANTA CLARA, CA 95054
18178	VACTEC, INC.	2423 NORTHLINE INDUSTRIAL BLVD.	MARYLANDHEIGHTS, MO 63043
18324	SIGNETICS CORP.	811 E. ARQUES	SUNNYVALE, CA 94086
22229	SOLITRON DEVICES, INC., DIODES, INTEGRATED CIRCUITS AND CMOS	8808 BALBOA AVE.	SAN DIEGO, CA 92123
24355	ANALOG DEVICES INC.	P. 0. BOX 280	NORWOOD, MA 02062
27014	NATIONAL SEMICONDUCTOR CORP.	2900 SAN YSIDRO WAY	SANTA CLARA, CA 95051
27802	VECTRON LABORATORIES INC.	121 WATER ST.	NORWALK, CT 06854
28480	HEWLETT-PACKARD CO., CORPORATE HQ.	1501 PAGE MILL RD.	PALO ALTO, CA 94304
32997	BOURNS, INC., TRIMPOT PRODUCTS DIV.	1200 COLUMBIA AVE.	RIVERSIDE, CA 92507
34371	HARRIS SEMICONDUCTOR, DIV. OF HARRIS-INTERTYPE CORP.	P. O. BOX 883	MELBOURNE, FL 32901
56289	SPRAGUE ELECTRIC CO.	NORTH ADAMS, MA 01247	
71279	CAMBRIDGE THERMIONIC CORP.	445 CONCORD AVE.	CAMBRIDGE, MA 02138
72136	ELECTRO MOTIVE CORP., SUB OF INTERNATIONAL ELECTRONICS CORP.	SOUTH PARK AND JOHN STREETS	WILLIMANTIC, CT 06226
72982	ERIE TECHNOLOGICAL PRODUCTS, INC.	644 W. 12TH ST.	ERIE, PA 16512
73138	BECKMAN INSTRUMENTS, INC., HELIPOT DIV.	2500 HARBOR BLVD.	FULLERTON, CA 92634
75042	TRW ELECTRONIC COMPONENTS, IRC FIXED RESISTORS, PHILADELPHIA DIVISION	401 N. BROAD ST.	PHILADELPHIA, PA 19108
	MILLER, J. W., DIV.	19070 RTEYES AVE.	COMPTON, CA 90224
76493	BELL INDUSTRIES, INC.,		
78488	STACKPOLE CARBON CO.		ST. MARYS, PA 15857
80009	TEKTRONIX, INC.	P. O. BOX 500	BEAVERTON, OR 97077
80294	BOURNS, INC., INSTRUMENT DIV.	6135 MAGNOLIA AVE.	RIVERSIDE, CA 92506
81483	INTERNATIONAL RECTIFIER CORP.	9220 SUNSET BLVD.	LOS ANGELES, CA 90069
84411	TRW ELECTRONIC COMPONENTS, TRW CAPACITOR	S 112 W. FIRST ST.	OGALLALA, NB 69153
86684	RCA CORP., ELECTRONIC COMPONENTS	415 S. 5TH ST.	HARRISON, NJ 07029
90201	MALLORY CAPACITOR CO., DIV. OF P. R. MALLORY CO., INC.	3029 E. WASHINGTON ST.	INDIANAPOLIS, IN 46206
91418	RADIO MATERIALS CO.	4242 W. BRYN MAWR	CHICAGO, IL 60646
91637	DALE ELECTRONICS, INC.	P. 0. BOX 609	COLUMBUS, NB 68601

Ckt No.	Tektronix Part No	Serial/Model No. Eff	Dscont	Name & Description	Mfr Code	Mfr Part Number
A1	614-0559-00			FRONT PANEL ASSY	80009	614-0559-00
AA1	670-3587-00			CKT CARD ASSY:FRONT PANEL	80009	670-3587-00
A1A21	260-1693-00	B010100	B030523	FREQ SPAN/DIV AND RESOLUTION SEL ASSY	80009	260-1693-00
A1A21	260-1693-01	B030524		FREQ SPAN/DIV AND RESOLUTION SEL ASSY	80009	260-1693-01
A1A32	260-1694-00	B010100	B030523	TIME/DIV SELECTOR ASSY	80009	260-1694-00
A1A32	260-1694-01	B030524		TIME/DIV SELECTOR ASSY	80009	260-1694-01
A100	644-0448-00			REFERENCE MODULE	80009	644-0448-00
A100A1	670-3578-00			CKT CARD ASSY:FREQUENCY REFERENCE MOTHER BD	80009	670-3578-00
A100A2	670-3579-00			CKT CARD ASSY:"A" OSCILLATOR	80009	670-3579-00
A100A3	670-3580-00			CKT CARD ASSY:A/N	80009	670-3580-00
A100A4	670-3581-00			CKT CARD ASSY:TUNE REFERENCE B/N	80009	670-3581-00
A100A5	670-3582-00			CKT CARD ASSY:1ST LO LOCK	80009	670-3582-00
A100A6	670-3583-00	B010100	B020259	CKT CARD ASSY:"BW OSCILLATOR	80009	670-3583-00
A100A6	670-3583-01	8020260		CKT CARD ASSY:"B" OSCILLATOR	80009	670-3583-01
A100A7	670-3584-00			CXT CARD ASSY:"A" AND "B" OSCILLATOR CONTROL	80009	670-3584-00
A100A8	670-3585-00	B010100	B020259	CKT CARD ASSY:REF OSCILLATOR AND CALIBRATOR	80009	670-3585-00
A100AB	670-3585-01	B020260		CKT CARD ASSY:REF OSCILLATOR AND CALIBRATOR	80009	670-3585-01
A500	670-3586-00			CKT CARD ASSY:SUEEP	80009	670-3586-00
A1000	644-0449-00			IF MODULE ASSY	80009	644-0449-00
A1000A1	670-3590-00			CKT CARD ASSY:IF MOTHER	80009	670-3590-00
A1000A2	670-3591-00	B010100	B029999	CKT CARD ASSY:10.7 MHZ IF INPUT FILTER	80009	670-3591-00
A1000A2	670-3591-01	B030000		CKT CARD ASSY:10.7 MHZ IF INPUT FILTER	80009	670-3591-01
A1000A3	670-3592-00			CKT CARD ASSY:LOG LIN AMPLIFIER	80009	670-3592-00
A1000A4	670-3594-00			CKT CARD ASSY:10.7 MHZ AMPLIFIER	80009	670-3594-00
A1000A5	670-3595-00			CKT CARD ASSY:250 KHZ AMPLIFIER	80009	670-3595-00
A1000A6	670-3912-00			CKT CARD ASSY:2ND LO	80009	670-3912-00
A1000A7	670-3914-00			CKT CARD ASSY:2ND MIXER	80009	670-3914-00
A1000A8	672-0486-00			VARIABLE RESOLUTION ASSY	80009	672-0486-00
A8A1	670-3593-00			CKT CARD ASSY:VARIABLE RESOLUTION	80009	670-3953-00
A1000						
A8A2	670-3425-10			CKT CARD ASSY:CRYSTAL HOLDER	80009	670-3425-10
A2000	644-0451-00			RF MODULE ASSY	80009	644-0451-00
A2000A1	644-0450-00			1ST LO MODULE ABBY	80009	644-0450-00
A2000						
A1A1	670-3597-00			CKT CARD ASSY: 1ST LO	80009	670-3597-00
A2000						
A1A2	670-3598-00			CKT CARD ASSY:1ST LO MOTHER	80009	670-3598-00
A2000A2						
A2000						
A2A1	670-4194-00			CKT CARD ASSY:DCPL "A"	80009	670-4194-00
A2000						
A2A2	670-4195-00			CKT CARD ASSY:DCPL "B	80009	670-4195-00
A3000A1	670-3588-00			CKT CARD ASSY:TRANSVERSE VERT INTERFACE	80009	670-3588-00
A4000	670-3929-00			CKT CARD ASSY:DIGITAL AVERAGING	80009	670-3929-00
A4500	670-3928-01	B010100	B020259	CKT CARD ASSY:DIGITAL STORAGE	80009	670-3928-01
A4500	670-3928-02	B020260	B030322	CKT CARD ASSY:DIGITAL STORAGE	80009	670-3928-02
A4500	670-3928-03	B030323		CKT CARD ASSY:DIGITAL STORAGE	80009	670-3928-03
C3	283-0028-01			CAP.,FXD,CER DT:0.0022UF, 20%,50V	56289	19C606
C11	283-0028-00			CAP.,FXD,CER DI:0.0022UF, 20%,50V	56289	19C606
C102	281-0752-00			CAP.,FXD,CER DI:0.00175WUF,10A	72982	1214-007
C104	281-0752-00			CAP.,FXD,CER DS:0.00175UF,10A	72982	1214-007
C106	281-0752-00			CAP.,FXD,CER DI:0.00175UF,10A	72982	1214-007

[1]Furnished as a unit with S64.
[2]Furnithed as a unit with 866.

Ckt No.	Tektronix Part No	Serial/Model No. Eff	Dscont	Name & Description	Mfr Code	Mfr Part Number
C124	290-0535-00			CAP., FXD, ELCTLT:33UF, 20%, 10V	56289	196D336X0010KA1
C126	283-0204-00			CAP., FXD, CER DI: 0.01UF, 20%, 50V	72982	8121N058651103M
C127	283-0180-00			CAP., FXD, CER DI:5600PF, 20%, 200V	72982	8121N204651562M
C128	283-0111-00			CAP., FXD, CER DI:0.1UF, 20%, 50V	72982	8131N075651104M
C129	283-0111-00			CAP., FXD, CER DI:0.1UF, 20%, 50V	72982	8131N075651104M
C132	283-0249-00			CAP., FXD, CER DI:0.068UF, 10%, 50V	72982	8131N075WR5683K
C137	281-0617-00			CAP., FXD, CER DI:15PF, 10%, 200V	72982	374-001C0G0150K
C142	283-0204-00			CAP., FXD, CER DI:0.01UF, 20%, 50V	72982	8121N058651103M
C154	283-0204-00			CAP., FXD, CER DI:0.01UF, 20%, 50V	72982	8121N058651103M
C156	290-0574-00			CAP., FXD, ELCTLT:47UF, 10%, 20V	56289	196D476X9020
C158	283-0204-00			CAP., FXD, CER DI:0.01UF, 20%, 50V	72982	8121N058651103M
C160	290-0532-00			CAP., FXD, ELCTLT 150UF, 20%, 6V	90201	TDC157M006CL
C162	290-0776-00			CAP., FXD, ELCTLT:22UF, +50-10%, 10V		
C166	290-0526-00			CAP., FXD, ELCTLT:6.8UF, 20%, 6V	90201	TDC685M006EL
C172	290-0526-00			CAP., FXD, ELCTLT:6.BUF, 20%, 6V	90201	TDC685M006EL
C178	283-0359-00			CAP., FXD, CER DI:1000PF, 10%, 200V	72982	8131M200A102K
C179	290-0574-00			CAP., FXD, EL4CTLT:47UF, 10%, 20V	56289	196D476X9020
C180	285-1118-00			CAP., FXD, PLSTC: 0.5UF, 10%, 20CV	84411	TEK135A50492
C182	283-0114-00			CAP., FXD, CER DI:0.0015UF, 5%, 200V	72982	805-509B152J
C184	290-0574-00			CAP., FXD, ELCTLT:47UF, 10%, 20V	56289	196D476X9020
C186	290-0574-00			CAP., FXD, ELCTLT: 47UF, 10%, 20V	56289	196D476X9020
C190	290-0535-00			CAP., FXD, ELCTLT:33UF, 20%, 10V	56289	196D336X0010KA1
C198	290-0535-00			CAP., FXD, ELCTLT:33UF, 20%, 10V	56289	196D336X0010KA1
C201	290-0574-00			CAP., FXD, ELCTLT:47UF, 10%, 20V	56289	196D476X9020
C204	283-0360-00			CAP., FXD, CER DI:3300PF, 10%, 20V		
C210	283-0070-00			CAP., FXD, CER DI:30PF, 10%, 50V	72982	8121-060C0G0300K
C212	285-1125-00			CAP., FXD, PLSTC:0.5UF, 20%, 50V	80009	285-1124-00
C214	290-0574-00			CAP., FXD, ELCTLT:47UF, 10%, 20V	56289	196D476X9020
C216	290-0776-00			CAP., FXD, ELCTLT:22UF, +50-10%, 10V		
C218	290-0776-00			CAP., FXD, ELCTLT: 22UF, +50-10%, 10V		
C219	290-0574-00			CAP., FXD, ELCTLT:47UF, 10%, 20V	56289	196D476X9020
C220	290-0527-00			CAP., FXD, ELCTLT: 15UF, 20%, 20V	90201	TDC156M020NLF
C222	290-0527-00			CAP., FXD, ELCTLT 15UF, 20%, 20V	90201	TDC156M020NLF
C224	290-0527-00			CAP., FXD, ELCTLT: 15UF, 20%, 20V	90201	TDC156M020NLF
C226	283-0204-00			CAP., FXD, CER DI:0.01UF, 20%, 50V	72982	8121N058651103H
C227	283-0204-00			CAP., FXD, CER DI:0.01UF, 20%, 50V	72982	8121N058651103M
C228	283-0204-00			CAP., FXD, CER DI:0.01UF, 20%, 50V	72982	8121N058651103M
C230	283-0114-00			CAP., FXD, CER DI:0.0015UF, 51, 200V	72982	805-509B152J
C232	283-0204-00			CAP., FXD, CER DI:0.01UF, 20%, 500V	72982	8121N058651103M
C236	283-0640-00			CAP., FXD, MICA D:160PF, 1%, 100V	00853	D151E161F0
C237	-283-0687-00			CAP., FXD, MICA D:560PF, 2%, 300V	72136	DM15E561G0300
C238	283-0640-00			CAP., FXD, MICA D:160PF, 1%, 100V	00853	D151E161F0
C240	283-0204-00			CAP., FXD, CER DI:0.01UF, 20%, 50V	72982	8121N58651103M
C242	283-0111-00			CAP., FXD, CER DI:0.1UF, 20%, 50V	72982	8131N075651104M
C244	283-0111-00			CAP., FXD, CER DI:0.1UF, 20%, 50V	72982	8131N075651104M
C248	283-0087-00			CAP., FXD, CER DI:300PF, 5%, 1000V	56289	403637
C252	283-0239-00			CAP., FXD, CER DI:0.022UF, 10%, 50V	72982	8131N075WR5223K
C253	283-0204-00			CAP., FXD, CER DI:0.01UF, 20%, 50V	72982	8121N058651103M
C256	283-0111-00			CAP., FXD, CER DI:0.1UF, 20%, 50V	72982	8131N075651104M
C258	290-0574-00			CAP., FXD, ELCTLT:47UF, 10%, 20V	56289	196D476X9020
C259	290-0535-00			CAP., FXD, ELCTLT: 33UF, 20%, 10V	56289	196D336X0010YA1
C260	283-0204-00			CAP., FXD, CER DI:0.01UF, 20%, 50V	72982	8121N058651103M
C261	290-0726-00	XB020260		CAP., FXD, ELCTLT:220UF, 20%, 10V	56289	196D227X0010TE3
C262	283-0198-00			CAP., FXD, CER DI:0.22UF, 20%, 50V	72982	8131N075 E224M

Ckt No.	Tektronix Part No	Serial/Model No. Eff	Dscont	Name & Description	Mfr Code	Mfr Part Number
C252	283-0239-00			CAP., FXD, CER DI:0.022UF, 10%, 50V	72982	8131N075C223K
C253	283-0204-00			CAP., FXD, CER DI:0.01UF, 20%, 50V	72982	8121N075Z5U0103M
C256	283-0111-00			CAP., FXD, CER DI:0.1UF, 20%, 50V	72982	8121-N088Z5U104M
C258	290-0574-00			CAP., FXD, ELCTLT:47UF, 100, 20V	90201	TDC476K020CL
C259	290-0535-30	B001010	B030528	CAP., FXD, ELCTLT:33UF, 20o%, 10V	56289	196D336X0010KA1
C259	290-0527-00	B030529		CAP., FXD, ELCTLT:15UF, 200%, 20V	90201	T0C156M020FL
C260	283-0204-00			CAP., PXD, CER DI:0.0lUF, 20%, 50V	72982	8121N075Z5U0103M
C261	290-072600	XB020260		CAP., FXD, ELCTLT:220UF, 20%, 10V	56289	196D227X0010TE3
C262	283-0198-00			CAP., FXD, CER DI:0.22UF, 20%, 50V	72982	8131N075 E224M
C264	283-0204-00			CAP., FXD, CER DI:0.01UF, 20, 50V	72982	8121N075Z5U0103M
C270	283-0180-00			CAP., FXD, CER DI:5600PF, 20%, 200V	72982	8121N204 E 562M
C272	283-0204-00			CAP., FXD, CER DI:0.10UF, 20%, 50V	72982	8121N075Z5U0103M
C273	283-0191-00			CAP., FXD, CER DI:0.022UF, 200, 50V	72982	8121N075Z5U0223M
C274	290-0574-00			CAP., FXD, ELCTLT:47UF, 10, 20V	90201	TDC476K020CL
C276	283-0249-00			CAP., FXD, CER DI:0.068UF, 10%, 50V	72982	8131N075 C 683K
C278	281-0617-00			CAP., FXD, CER DI:15PF, 101, 200V	72982	374-001C0G0150K
C290	290-0517-00			CAP., FXD, ELCTLT:6.8UF, 20%, 35V	56289	196D685X0035KA1
C292	290-0517-00			CAP., FXD, ELCTLT:6.8UF, 20%, 35V	56289	196D685X0035KA1
C293	290-0574-00			CAP., FXD, ELCTLT:47UF, 100, 2 W	90201	TDC476K020CL
C294	283-0204-00			CAP., FXD, CER DI:0.0U1F, 20%, 50V	72982	8121N075Z5U0103M
C296	283-0204-00			CAP., FXD, CER DI:0.01UF, 20%, 50V	72982	8121N075Z5U0103M
C297	290-0574-00			CAP., FXD, ELCTLT:47UW, 10%, 20V	90201	TDC476K020CL
C310	283-0070-00			CAP., FXD, CER DI:30PF, 10%, 50V	72982	8121-060C0G0300K
C326	290-0517-00			CAP., FXD, ELCTLT:6.8UF, 20f, 35V	56289	196D685X0035KA1
C330	283-0111-00			CAP., FXD, CER DI:0.1UF, 20%, 50V	72982	8121-N088Z5U104M
C334	283-0070-00			CAP., FXD, CER DI:30PP, 10, 5WV	72982	8121-060C0G0300K
C340	283-0070-00			CAP., FXD, CER DI:30PF, 10%, 5Wv	72982	8121-060C0G0300K
C348	290-0517-00			CAP., FXD, ELCTLT:6.8UF, 20%, 35V	56289	196D685X0035KA1
C350	283-0000-00			CAP., FXD, CER DI:0.001UF, +100-0%, 500V		72982 831-516E102P
C352	283-0000-00			CAP., FXD, CER DI:0.001UP, +100-0%, 500V		72982 831-516E102P
C354	283-0000-00			CAP., FXD, CER DI:0.001UF, +100-0%, 500W	72982	831-516E102P
C356	283-0000-00			CAP., FXD, ELCTLT:47UF, 10%, 20V	90201	TDC476K020CL
C372	290-0488-00			CAP., FXD, ELCTLT:2.2UF, 10%, 20V	90201	TAE225020P1A
C376	290-0248-01			CAP., FXD, ELCTLT:150UF, 20%, 15V	56289	150D157X0015S2
C382	283-0167-00			CAP., FXD, CER DI:0.1UF, 10*, 100V	72982	81314147 C 104K
C386	283-0167-00			CAP., FXD, CER DI:0.lUF, 10%, 10WV	72982	81314147 C 104K
C392	283-0167-00			CAP., FXD, CER DI:0.1UF, 10%, 100V	72982	81314147 C 104K
C394	283-0339-00			CAP., FXD, CER DI:0.22UF.10%, 50V	72982	8131N075W5R224K
C404	283-0203-00			CAP., FXD, CER DI:0.47UF, 20%, 50V	72982	8131N075 E474M
C408	283-0203-00			CAP., FXD, CER DI:0.47UF, 20%, 50V	72982	8131N075 E474M
C514	283-0032-00			CAP., FXD, CER DI:470PF, 5%, 500V	72982	831-500Z5D471J
C516	283-0032-00			CAP., FXD, CER DI:470PF, 5%, 500V	72982	831-500Z5D471J
C518	283-0032-00			CAP., FXD, CER DI:470PF, 5%, 500V	72982	831-500z5D471J
C569	283-0154-00			CAP., FXD, CER DI:.22PF, 5%, 50V	72982	8111B061C0G220J
C576	283-0204-00			CAP., FXD, CER DI:0.01UF, 20%, 50V	72982	8121N075ZSU0103M
C580	290-0536-00			CAP., FXD, ELCILT:10UF, 20%, 25V	90201	TDC106M025FL
C582	290-0536-00			CAP., FXD, ELCTLT:10UF, 20%, 25V	90201	TDC106M025FL
C588	283-0177-00			CAP., FXD, CER DI: 1UF, +80-20%, 25V	72982	8131N039 E 105Z
C589	290-0526-00			CAP., FXD, ELCTLT:6.8UF, 20%, 6V	90201	TDC685M006EL
C592	283-0191-00			CAP., FXD, CER DI:0.022UF, 20%, 50V	72982	8121N075Z5U0223M
C593	290-0524-00			CAP., FXD, ELCTLT:4.7UF, 20%, 10V	90201	TDC475M010EL
C610	283-0201-00			CAP., FXD, CER DI:27PF, 100, 200V	72982	8101B210X7R0270K

Ckt No.	Tektronix Part No	Serial/Model No. Eff	Dscont	Name & Description	Mfr Code	Mfr Part Number
C676	283-0111-00			CAP., FXD, CER DI:0.1UF, 20%, 50V	72982	8131N075651104M
C710	283-0201-00			CAP., FXD, CER DI:27PF, 10%, 200V	72982	8101A208W5R270K
C712A	295-0178-00			CAP., SET, MTCHD:0.05UF, 4.95UF	80009	295-0178-00
C724	283-0191-00	XB010158		CAP., FXD, CER DI:0.022UF, 20%, 50V	72982	8121N063651223M
C726	283-0198-00			CAP., FXD, CER DI:0.22UF, 20%, 50V	72982	8131N075651224M
C728	283-0176-00			CAP., FXD, CER D1:0.0022UF, 20%, 50V	72982	8121M050W5R222M
C758	283-0177-00			CAP., FXD, CER DI:1UF, +80-20%, 25V	72982	8131N039651105Z
C772	283-0111-00			CAP., FXD, CER DI:0.1UF, 20%, 50V	72982	8131N075651104M
C784	283-0111-00			CAP., FXD, CER DI:0.1UF, 20%, 50V	72982	8131N075651104M
C786	283-0111-00			CAP., FXD, CER DI:0.1UF, 20%, 50V	72982	8131N075651104M
C788	283-0111-00			CAP., FXD, CER DI:0.lUF, 20%, 50V	72982	8131N075651104M
C790	283-0003-00			CAP., FXD, CER DI:0.01UF, +80-20%, 150V	72982	855-547E103z
C830	283-0103-00			CAP., FXD, CER DI:180PF, 5%, 500V	56289	40C638
C832	283-0103-00			CAP., FXD, CER DI:180PF, 5%, 500V	56289	40C638
C840	283-0065-00			CAP., FXD;CER DI:0.001UF, 5%, 100V	72982	805-505B102J
CB41	283-0198-00			CAP., FXD, CER DI:0.22UF, 20, 50V	72982	8131N075651224M
C860	283-0640-00			CAP., FXD, MICA D:160PF, 1., 100V	00853	D151E161F0
C880	283-0111-00			CAP., FXD, CER DI:0.lUF, 20%, 50V	72982	8131N075651104M
C1002	283-0111-00			CAP., FXD, CER DI:0.1UF, 20%, 50V	72982	8131N075651104M
C1010	281-0752-00			CAP., FXD, CER DI:1750PF	80009	281-0752-00
C1012	283-0154-00			CAP., FXD, CER DI:22PF, 5%, 50V	72982	8111A058C0G2200J
C1014	281-0752-00			CAP., FXD, CER DI:1750PF	80009	281-0752-00
C1016	283-0154-00			CAP., FXD, CER DI:22PF, 5%, 50V	72982	811IA058C0G220J
C1018	281-0752-00			CAP., FXD, CER DI:1750PF	80009	281-0752-00
C1040	283-0706-00			CAP., FXD, MICA D:91PF, +/-1PF, 500V	00853	D15-5E910F0
C1042	281-0167-00			CAP., VAR, CER DI:9-45PF, 200V	72982	538-011-0 9-45
C1050	283-0111-00			CAP., FXD, CER DI:0.1UF, 20%, 50V	72982	8131N075651104M
C1052	283-0111-00			CAP., FXD, CER DI:0.1UF, 20%, 50V	72982	8131N075651104M
C1053	283-0111-00			CAP., FXD, CER DI:0.lUF, 20%, 50V	72982	8131N075651104M
C1054	283-0111-00			CAP., FXD, CER DI:0.lUF, 20%, 50V	72982	8131N075651104M
C1056	283-0111-00			CAP., FXD, CZR Dls0.1UF, 20%, 50V	72982	8131N075651104M
C1o05	283-0111-00			CAP., FXD, CER DI:0.lUF, 20%, 50V	72982	8131N075651104M
C1059	203-0111-00			CAP., FXD, CER DII0.lUF, 20%, 50V	72982	8131N075651104M
CI060	283-0000-00			CAP., FXD, CZR Di0.00lUF, +100-0%, 50V	72982	831-5162102P
C1074	283-0204-00			CAP., FXD, CZR DII0.01UP, 20, 500V	72982	8121N058651103M
C1088	283-0111-00			CAP., FXD, CER DII0.1UF, 20%, 50V	72982	8131N075651104M
C1102	281-0509-00			CAP., FXD, CER DI:15PF, +/-1.5PF, 500V	72982	301-000C0G0150K
C1104	283-0111-00			CAP., FXD, CER DI:0.1UF, 20%, 50V	72982	8131N075651104M
C1110	283-0000-00			CAP., FXD, CER DI:0.001UF, +100-0o, 500V	72982	831-516E102P
C1128	283-0111-00			CAP., FXD, CER DI:0.1UF, 20%, 50V	72982	8131N075651104N
C1132	281-0509-00			CAP., FXD, CER DI:15PF, +/-1.5PF, 500V	72982	301-000C0G0150K
C1134	283-0111-00			CAP., FXD, CER DI:0.lUF, 20%, 50V	72982	8131N075651104M
C1140	283-0000-00			CAP., FXD, CER DI:0.001UF, +100-0%, 500V	72982	831-516E102P
C1158	283-0111-00			CAP., FXD, CER DI:0.lUF, 20%, 50V	72982	8131N075651104M
C1164	283-0111-00			CAP., FXD, CER DI:0.1UF, 20%, 50V	72982	8131N075651104M
C1169	283-0111-00			CAP., FXD, CER DI:0.1UF, 20%, 50V	72982	8131N075651104M
C1170	283-0000-00			CAP., FXD, CER DI:0.001UF, +100-0%, 500V	72982	831-516E102P
C1182	281-0509-00			CAP., FXD, CER DI:15PF, +/-1.5PF, 500V	72982	301-000C0G0150K
C1184	283-0111-00			CAP., FXD, CER DI:0.1UF, 20%, 50V	72982	8131N075651104M
C1198	283-0111-00			CAP., FXD, CER DI:0.lUF, 20%, 50V	72982	8131N075651104M
C1202	281-0509-00			CAP., FXD, CER DI:15PF, +/-1.5PF, 500V	72982	301-000C0G0150K
C1214	283-0111-00			CAP., FXD, CER DI:0.1UF, 20%, 50V	72982	8131N075651104M

Ckt No.	Tektronix Part No	Serial/Model No. Eff	Dscont	Name & Description	Mfr Code	Mfr Part Number
C1158	283-0111-00			CAP., FXD, CER DI:0.1UF, 20%, 50V	72982	8121-N088Z5U104M
C1164	283-0111-00			CAP., FXD, CER DI:0.1UF, 20%, 50V	72982	8121-N088Z5U104M
C1169	283-0111-00			CAP., FXD, CER DI:0.1UF, 20%, 50V	72982	8121-N038Z5U104M
C1170	283-0000-00			CAP., FXD, CER DI.0.001UF, +100-0%, 500V	72982	831-516E102P
C1182	281-0509-00			CAP., FXD, CER DI:15PF, +/-1.5PF, 500V	72982	301-o00C0G0150K
C1184	283-0111-00			CAP., FXD, CER DI:0.1UF, 20%, 50V	72982	8121-N088Z5U104M
C1198	283-0111-00			CAP., FXD, CER DI:0.1UF, 20%, 50V	72982	8121-N088z5U104M
C1202	281-0509-00			CAP., FXD, CER DI:15PF, +/-1.5PF, 500V	72982	301-000C0G0150K
C1214	283-0111-00			CAP., FXD, CER DI:0.1UF, 20%, 50V	72982	8121-N088Z5U104M
C1216	283-0111-00			CAP., FD, CER DI:0.1UF, 20%, 50V	72982	8121-N088Z5U104M
C1220	283-0204-00			CAP., FXD, CER DI:0.01UF, 20%, 50V	72982	8121N075Z5U0103M
C1222	283-0051-00			CAP., FXD, CER DI:0.0033UF, 5%, 100V	72982	8131N145 A 332J
C1224	281-0605-00			CAP., FXD, CER DI:208PF, 10%, 500V	04222	7001-1375
C1226	283-0204-00			CAP., FXD, CER DI:0.01UF, 20%, 50V	72982	8121N075z5U0103M
C1234	283-0204-00			CAP., FXD, CER DI:0.01UF, 20%, 50V	72982	8121N075Z5U0103M
C1240	283-0204-00			CAP., FXD, CER DI:0.01UF, 20%, 50V	72982	8121N075Z5U0103M
C1242	283-0111-00			CAP., FXD, CER DI:0.1UF, 20%, 50V	72982	8121-N088Z5U104M
C1246	283-0111-00			CAP., XD, CER DI:0.1UF, 20%, 5oV	72982	8121-N088Z5U104M
C1248	283-0111-00			CAP., PXD, CER DI:0.1UF, 20%, 50V	72982	8121-N088Z5U104M
C1254	283-0268-00			CAP., FXD, CER DI:0.015UF, 10%, 50V	72982	8131N075W5RI53K
C1256	283-0204-00			CAP., FXD, CER DI:0.01UF, 20%, 50V	72982	8121N075z5U0103N
C1258	281-0551-00			CAP., FXD, CER DI:390PF, 10%, 50V	04222	7001-1363
C1300	283-0604-00			CAP., PXD, MICA D:304PF, 2, 300V	00853	D153F3040G0
C1302	283-0204-00			CAP., FXD, CER DI:0.01UF, 20%, 50V	72982	8121N075Z5U0103M
C1304	290-0718-00			CAP., FXD, ELCTLT:22UF, 20%, 35V	56289	196D226X0035PE3
C1306	290-0718-00			CAP., FD, ELCTLT:22UF, 20%, 35V	56289	196D226X0035PE3
C1312	283-0204-00			CAP., FXD, CER DI:0.01UF, 20%, 50V	72982	8121N075Z5U0103M
C1316	281-0579-00			CAP., FXD, CER DI:21PF, 5, S500V	72982	301-50C0G0210J
C1318	283-0204-00			CAP., FXD, CER DI:0.01UF, 20%, S0V	72982	8121N075z5U0103M
C1320	283-0204-00			CAP., FXD, CER DI:0.01UF, 20%, 50V	72982	8121N075Z5U0103M
C1326	283-0204-00			CAP., FXD, CER DI:0.0IUF, 20%, 50V	72982	8121N075Z5U0103M
C1350	283-0177-00			CAP., FD, CER DI:1UF, +80-20%, 25V	72992	8131N039 E 105Z
C1354	283-0177-00			CAP., FXD, CER DI:1UF, +80-20%, 25V	72982	8131N039 E 105Z
C1364	283-0177-00			CAP., FXD, CER DI:1UF, +80-20%, 25V	72982	8131N039 E 105Z
C1374	283-0177-00			CAP., FXD, CER DI:l1UF, +80-20%, 25V	72982	8131N039 E 105z
C1380	283-0177-00			CAP., FXD, CER DI:1UF, +80-20%, 25V	72982	8131N039 E 105Z
C1384	283-0177-00			CAP., FXD, CER DI:1UF, +80-20%, 25V	72982	8131N039 E 105Z
C1390	290-0523-00			CAP., FXD, ELCTLT:2.2UF, 20%, 20V	56289	196D225X0020HA1
C1392	283-0026-00			CAP., FXD, CER DI:0.2UF, +80-201, 25V	56289	274C3
C1400	283-0167-00			CAP., FXD, CER DI:0.1UFP, 10%, 100V	72982	81314147 C 104K
C1402	283-0204-00			CAP., FXD, CER DI:0.01UF, 20%, 50V	72982	8121N075Z5U0103N
C1406	283-0156-00			CAP., FD, CER DI:1000PF, +100-0 , 20CV	72982	811IA208E102Z
C1408	283-0111-00			CAP., FXD, CER DI:0.IUF, 20%, 50V	72982	8121-N088Z5U104M
C1410	290-0523-00			CAP., FXD, ELCTLT:2.2UF, 20%, 20V	56289	196D225X0020HA1
C1412	290-0523-00			CAP., FXD, ELCTLT:2.2UF, 20%, 20V	56289	196D225X0020HA1
C1417	283-0111-00			CAP., FXD, CER DI:0.1UF, 20%, 50V	72982	8121-N088Z5U104M
C1418	283-0070-00			CAP., FXD, CER DI:30PF, 10%, 50V	72982	8121-060C0G0300K
C1420	283-0051-00			CAP., FXD, CER DI:0.0033UF, 5%, 100V	72982	8131N145 A 332J
C1422	283-0180-00			CAP., FXD, CER DI:5600PF, 20%, 200V	72982	8121N204 E 562M
C1430	283-0204-00			CAP., FXD, CER DI:0.01UF, 20%, 50V	72982	8121N075Z5U0103M
C1436	283-0111-00			CAP., FXD, CER DI:0.1UF, 20%, 50V	72982	8121-N088Z5U104M
C1440	283-0087-00			CAP., FXD, CER DI:300PF, 10%, 1000V	56289	403637
C1442	283-0204-00			CAP., FXD, CER DI:0.01UF, 20%, S0V	72982	8121N075Z5U0103M

Ckt No.	Tektronix Part No	Serial/Model No. Eff	Dscont	Name & Description	Mfr Code	Mfr Part Number
C1501	290-0527-00			CAP., FXD, ELCTLT:15UF, 20%, 20V	90201	TDC156M020NLF
C1502	283-0023-00			CAP., FXD, CER DI:0.1UF, +80-20%, 10V	91418	MX104Z1201R0
C1503	283-0023-00			CAP., FD, CER DI:0.1UF, +80-20%, 10V	91418	MX104Z1201R0 .
C1506	290-0527-00			CAP., FXD, ELCTLT:15UF, 20%, 20V	90201	TDC156M020NLF
C1507	283-0178-00			CAP., FXD, CER DI:0.1UF, +80-20, 100V	72982	8131N145651104Z
C1508	290-0523-00			CAP., FXD, ELCTLT:2.2UF, 20%, 20V	56289	196D225X0025HA1
C1510	283-0023-00			CAP., FXD, CER DI:0.1UF, +80-20%, 10V	91418	MX104Z1201R0
C1511	283-0080-00			CAP., FXD, CER DI:0.022UF, +80-20%, 25V	56289	19C611
C1512	283-0032-00			CAP., FXD, CER DI:470PF, 5, 500V	72982	831-500Z5D471J
C1520	283-0156-00			CAP., FXD, CER DI:1000PF, +100-0%, 200V	72982	8111A208E102Z
C1522	283-0023-00			CAP., FXD, CER DI:0.1UF, +80-20%, 10V	91418	MX104Z1201R0
C1528	283-0080-00			CAP., FXD, CER DI:0.022UF, +80-20%, 25V	56289	19C611
C1532	283-0220-00			CAP., FXD, CER DI:0.01UF, 20%, 50V	72982	8121N075W5R103M
C1533	290-0527-00			CAP., FXD, ELCTLT:15UF, 20%, 20V	90201	TDC156M020NLF
C1534	290-0527-00			CAP., FXD, ELCTLT:15UF, 20%, 20V	90201	TDC156M020NLF
C1540	290-0534-00			CAP., FXD, ELCTLT:1UF, 20%, 35V	56289	196D105X0035HA1
C1600	281-0158-00			CAP., VAR, CER D1:7-45PF, 50V	72982	518-000G7-45
C1602	283-0672-00			CAP., FXD, MICA D:Z00PF, 1%, 500V	00853	D155F201F0
C1604	281-0158-00			CAP., VAR, CER D1:7-45PF, 50V	72982	518-000G7-45
C1606	281-0544-00			CAP., FXD, CER DI:5.6PF, 10%, 500V	72982	301-000C0H0569D
C1608	283-0672-00			CAP., FXD, MICA D:200PF, 1%, 500V	00853	D155F201F0
C1632	283-0051-00			CAP., FXD, CER DI:0.0033UF, 5%, 100V	72982	8131N145C0G332J
C1634	283-0238-00			CAP., FXD, CER DI:0.01UF, 10%, S0V	72982	8121N071WR5103K
C1650	283-0111-00			CAP., FXD, CER DI:0.1UF, 20%, 50V	72982	8131N075651104M
C1652	283-0111-00			CAP., FXD, CER DI:0.1UF, 20%, 50V	72982	8131N075651104N
C1654	283-0204-00			CAP., FXD, CER DI:0.01UF, 20%, 50V	72982	8121N058651103M
C1656	283-0204-00			CAP., FXD, CER DI:0.01UF, 20%, 50V	72982	8121N058651103M
C1658	283-0111-00			CAP., FD, CER DI:0.1UF, 20%, 50V	72982	8131N075651104M
C1660	281-0093-00			CAP., VA, CER DI:5.5-18PF	72982	538-011C0P092R
C1662	283-0604-00			CAP., FXD, MICA D:304PF, 2%, 300V	00853	D153F3040G0
C1664	281-0093-00			CAP., VAR, CER DI:5.5-18PF	72982	538-011C0P092R
C1666	281-0125-00			CAP., VAR, MICA D:90-400PF, 175V	72136	T51917-1
C1668	281-0604-00			CAP., FXD, CER DI:2.2PF, +/-0.25PF, 500V	72982	301000C0J0229C
C1670	283-0177-00			CAP., FXD, CER DI:1UF, +80-20%, 25V	72982	8131N039651105Z
C1672	283-0111-00			CAP., FD, CER DI:0.1UF, 20%, 50V	72982	8131N075651104M
C1680	283-0111-00			CAP., FXD, CER DI:0.1UF, 20%, 50V	72982	8131N075651104M
C1681	283-0177-00			CAP., FXD, CER DI:1UF, +80-20%, 25V	72982	8131N039651105Z
C1682	283-0111-00			CAP., FXD, CER DI:0.1UF, 20%, 50V	72982	8131N075651104M
C1690	283-0177-00			CAP., FXD, CER DI:1UF, +80-20%, 25V	72982	8131N039651105Z
C1710	283-0111-00			CAP., FXD, CER DI:0.1UF, 20%, 50V	72982	8131N075651104H
C1712	283-0111-00			CAP., FXD, CER DI:0.1UF, 20%, 50V	72982	8131N075651104M
C1714	283-0204-00			CAP., FXD, CER DI:0.01UF, 20%, 50V	72982	8121N058651103M
C1716	283-0204-00			CAP., FXD, CER DI:0.01UF, 20%, 50V	72982	8121N058651103M
C1718	283-0197-00			CAP., FXD, CER DI:470PF, 5%, 100V	72982	8121N064C0G471J
C1719	283-0111-00			CAP., FXD, CER DI:0.1UF, 20%, 50V	72982	8131N075651104M
C1720	281-0093-00			CAP., VAR, CER DI:5.5-18PF	72982	538-0llC0P092R
C1724	281-0093-00			CAP., VAR, CER DI:5.5-18PF	72982	538-011C0P092R
C1726	281-0125-00			CAP., VAR, MICA D:90-400PF, 175V	72136	T51917-1
C1727	283-0111-00			CAP., FXD, CER DI:0.1UF, 20, 50V	72982	8131N075651104M
C1728	281-0604-00			CAP., FXD, CER DI:2.2PF, +/-0.25PF, 500V	72982	301-000C0J0229C
C1730	283-0111-00			CAP., PXD, CER DI:0.1UF, 20%, 50V	72982	8131N075651104M
C1731	283-0177-00			CAP., FXD, CER DI:1UF, +80-20%, 25V	72982	8131N039651105Z
C1732	283-0111-00			CAP., FXD, CER DI:0.1UF, 20%, 50V	72982	8131N075651104M

Ckt No.	Tektronix Part No	Serial/Model No. Eff	Dscont	Name & Description	Mfr Code	Mfr Part Number
C1718	283-0197-00			CAP., FXD, CER DI:470PF, 5%, 100V	72982	8121N064 A 471J
C1719	283-0111-00			CAP., FXD, CER DI:0.1UF, 20%, 50V	72982	8121-N088Z5U104M
C1720	281-0093-00			CAP., VAR, CER DI:5.5-18PF	72982	538-01lA5.5-18
C1724	281-0093-00			CAP., VAR, CER DI:5.5-18PF	72982	538-01IA5.5-18
C1726	281-0125-00			CAP., VAR, MICA D:90-400PF, 175V	72136	T51917-1
C]727	283-0111-00			CAP., FXD, CER DI:0.1UF, 20%, S0V	72982	8121-N088Z5U104M
C1728	281-0604-00			CAP., FXD, CER DI:2.2PF, +/-0.25PF, 500V	72982	301-000C0J0229C
C1730	283-0111-00			CAP., FXD, CER DI:0.1UF, 20%, 50V	72982	8121-N088Z5U104M
C1731	283-0177-00			CAP., FXD, CER DI:1UF, +80-20%, 25V	72982	8131N039 E 105Z
C1732	283-0111-00			CAP., FXD, CER DI:0.1UF, 20%, 50V	72982	8121-N088Z5U104M
C1740	283-0111-00			CAP., FXD, CER DI:0.1UF, 20%, 50V	72982	8121-N088Z5U104M
C1741	283-0177-00			CAP., FXD, CER DI:1UF, +80-20%, 25V	72982	8131N039 E 105Z
C1742	283-0177-00			CAP., FXD, CER DI:1UF, +80-20%, 25V	72982	8131N039 E 105Z
C1744	283-0177-00			CAP., FXD, CER DI:1UF, +80-20%, 25V	72982	8131N039 E 105Z
C1746	283-0204-00			CAP., FXD, CER DI:0.01UF, 20%, 50V	72982	8121N075Z5U0103M
C1749	283-0177-00			CAP., FXD, CER DI:1UF, +8-20’, 25V	72982	8131N039 E 105Z
C1750	283-0111-00			CAP., FXD, CER DI:0.1UF, 20%, 50V	72982	8121-N088ZSU104M
C1752	283-0111-00			CAP., FXD, CER DI:0.1UF, 20%, 50V	72992	8121-N088ZSU104M
C1756	283-0204-00			CAP., FXD, CER DI:0.01UF, 20%, 50V	72982	8121N075Z5U0103M
C1760	281-0093-00			CAP., VAR, CER DI:5.5-18PF	72982	538-01A5.5-18
C1762	283-0197-00			CAP., FXD, CER DI:470PF, 5%, 100V	72982	8121N064 A 471J
C1764	281-0093-00			CAP., VAR, CER DI:5.5-18PF	72982	538-01lAS.5-18
C1766	281-0125-00			CAP., VAR, MICA D:90-400PF, 175V	72136	T51917-1
C1768	283-0204-00			CAP., FXD, CER DI:0.01UF, 20%, 50V	72982	8121N075Z5U0103M
C1772	283-0111-00			CAP., FXD, CER DI:0.1UF, 20%, 50V	72982	8121-N0B8Z5U104M
C1774	283-0111-00			CAP., FXD, CER DI:0.1UF, 20%, 50V	72982	8121-N088Z5U104M
C1776	283-0204-00			CAP., FXD, CER DI:0.0.01UF, 20, 50V	72982	8121N075Z5U0103M
C1778	283-0111-00			CAP., FXD, CER DI:0.1UF, 20%, 50V	72982	8121-N088Z5U104M
01780	283-0111-00			CAP., FXD, CER DI:0.1UF, 20%, 50V	72982	8121-N088Z5U104N
C1781	283-0177-00			CAP., FXD, CER DI:1UF, +80-20%, 25V	72982	8131N039 E 105Z
C1782	283-0111-00			CAP., FXD, CER DI:0.1UF, 20%, 50V	72982	8121-N088Z5U104M
01800	281-0093-00			CAP., VAR, CER DI:5.5-18PF	72982	538-011A5.5-18
C1802	283-0197-00			CAP., FXD, CER DI:470PF, 5+, 100V	72982	8121N064 A 471J
C1804	281-0093-00			CAP., VAR, CER DI:5.5-18PF	72982	538-01A5.5-18
C1806	281-0125-00			CAP., VAR, MICA D:90-400PF, 175V	72136	T51917-1
C1816	283-0177-00			CAP., FXD, CER DI:1UF, +80-20%, 25V	72982	8131N039 E 105Z
C1820	283-0111-00			CAP., FXD, CER DI:0.1UF, 200, 50V	72982	8121-N088Z5U104M
C1821	283-0177-00			CAP., FXD, CER DI:1UF, +80-20%, 25V	72982	8131N039 E 105Z
C1822	283-0111-00			CAP., FXD, CER DI:0.1UF, 20%, 50V	72982	8121-N088ZSU104M
C1830	283-0204-00			CAP., FXD, CER DI:0.01UF, 20%, 50V	72982	8121N075Z5U0103M
C1834	283-0111-00			CAP., FXD, CER DI:0.1tw, 20%, 50V	72982	8121-N088Z5U104M
C1842	283-0177-00			CAP., FXD, CER DI:1UF, +80-20%, 25V	72982	8131N039 E 105Z
C1844	283-0177-00			CAP., FXD, CER DI:1UF, +80-20%, 25V	72982	8131N039 E 105Z
C1846	283-0177-00			CAP., FXD, CER DI:1UF, +80-20%, 25V	72982	8131N039 E 10S0
C1847	283-0177-00			CAP., FXD, CER DI:1UF, +80-20%, 25V	72982	8131N039 E 105Z
C1848	283-0177-00			CAP., FMD, CER DI:lUF, +80-20%, 25V	72982	8131N039 E 105Z
C1850	283-0111-00			CAP., FXD, CER DI:0.1UF, 20%, 50V	72982	8121-N088ZSU104M
C1852	283-0111-00			CAP., FXD, CER DI:0.LUF, 20%, 50V	72982	8121-N088ZSU104M
C1854	283-0641-00			CAP., FXD, MICA D:180PF, 1%, 100V	00853	D1E8151EF0
C1856	283-0672-00			CAP., FXD, MICA D:200PF, 1%, 50V	00853	D155F201F0
C1859	23-0111-00			CAP., FXD, CER DI:0.1UF, 20%, 50V	72982	8121-N088Z5U104M
C1860	283-0159-00			CAP., FXD, CER DI:18PF, 5%, 50V	72982	8111B061C0G0180J
C1862	281-0645-00			CAP., FXD, CER DI:8.2PF, +/-0.25PF, 500V	72982	374-011C0H0829C

Ckt No.	Tektronix Part No	Serial/Model No. Eff	Dscont	Name & Description	Mfr Code	Mfr Part Number
C1886	283-0111-00			CAP., FXD, CER DI:0.1UF, 20%, 50V	72982	8131N075651104M
C1ies	283-0111-00			CAP., FXD, CER DI:0.1UF, 20%, 50V	72982	8131N075651104M
C1894	283-0111-00			CAP., FXD, CER DI:0.1UF, 20%, 50V	72982	8131N075651104M
C1895	283-0111-00			CAP., FXD, CER DI:0.1UF, 20%, 50V	72982	8131N075651104M
C1896	283-0111-00			CAP., FXD, CER DI:0.1UF, 20%, 50V	72982	8131N075651104M
C1902	283-0204-00			CAP., FXD, CER DI:0.01UF, 20%, 50V	72982	8121N058651103M
C1904	283-0111-00			CAP., FXD, CER DI:0.1UF, 20%, 50V	72982	8131N075651104M
C1906	283-0111-00			CAP., FXD, CER DI:0.1UF, 20%, 50V	72982	8131N075651104M
C1910	283-0111-00			CAP., FXD, CER DI:0.1WU, 20%, 50V	72982	8131N075651104M
C1912	283-0111-00			CAP., FXD, CER DI:0.1WU, 20%, S0V	72982	8131N075651104M
C1913	283-0659-00			CAP., FXD, MICA D:1160PP, 2%, 500v	00853	D195C1161G0
C1914	283-0697-00			CAP., FXD, MICA D:545PF, 1%, 300V	09023	CD15EC545F03
C1916	283-0642-00			CAP., FXD, MICA D:33PF, +/-0.5PP, 300V	00853	D10-3E330G0
C1918	283-0697-00			CAP., FXD, MICA D:545PF, 1, 300V	09023	CD15EC545F03
C1919	283-0659-00			CAP., FXD, MICA D:1160PF, 2%, 500V	00853	D195C1161G0
C2000	290-0135-00			CAP., FXD, ELCTLT:15UF, 20%, 20V	56289	150D156X0020B2
C2012	290-0524-00			CAP., FXD, ELCTLT:4.7UF, 20%, 10V	90201	TDC475M010EL
C2026	283-0156-00			CAP., FXD, CER DI:1000PF, +100-0%, 200V	72982	811IA208E102Z
C2030	290-0523-00			CAP., FXD, ELCT T:2.2UF, 20%, 20V	56289	196D225X0025HA1
C2032	283-0051-00			CAP., FXD, CER DI:0.0033UF, 5%, 100V	72982	8131N145C0G332J
C2034	283-0111-00			CAP., FXD, CER DI:0.1UF, 20, S0V	72982	8131N075651104M
C2040	290-0517-00			CAP., FXD, ELCTLT:6.8UF, 20%, 35V	56289	196D685X0035KA1
C2044	283-0156-00			CAP., FXD, CER DI:1000PF, +100-0%, 200V	72982	811LA208E102Z
C2046	290-0512-00			CAP., FXD, ELCITLT:22UF, 20%, 15V	56289	196D226X0015KA1
C2048	283-0005-00			CAP., FXD, CER DI:0.01UF, +100-0%, 250V	72982	8131-250651103P
C2052	283-0111-00			CAP., FXD, CER DI:0.1UF, 20%, 50V	72982	8131N075651104M
C2060	281-0617-00			CAP., FXD, CER DI:15PF, 10%, 200V	72982	374-001C0G0150K
C2064	283-0087-00			CAP., FXD, CER DI:300PF, 5, 1000V	56289	403637
C2102	281-0752-00			CAP., FXD, CER DI:1750PF	B0009	281-0752-00
C2104	281-0752-00			CAP., FXD, CER DI:1750PF	B0009	281-0752-00
C2106	281-0752-00			CAP., F)D, CER DI:1750P	80009	281-0752-00
C2258	283-0177-00			CAP., FXD, CER DI:1F, +80-20%, 25V	72982	8131N039651105Z
C2268	283-0203-00			CAP., FXD, CER DI:0.47UP, 20%, 50V	72982	8131N075651474M
C2269	283-0204-00			CAP., FXD, CER DI:0.01UF, 20%, 50V	72982	8121N058651103M
C2270	283-0204-00			CAP., FXD, CER DI:0.01UF, 20%, 50V	72982	8121N058651103M
C2287	283-0204-00			CAP., FXD, CER DI:0.01UF, 20%, 50V	72982	8121N058651103M
C2289	2B3-0204-00			CAP., FXD, CER DI:0.01UF, 20%, 50V	72982	8121N058651103M
C2290	283-0204-00			CAP., FXD, CER DI:0.01UF, 20%, 50V	72982	8121N058651103M
C2291	283-0204-00			CAP., FXD, CER DI:0.01UF, 20%, 50V	72982	8121N058651103M
C2310	290-0114-00			CAP., FXD, ELCTLT:47UF, 20%, 6V	56289	150D476X0006B2
C2314	283-0204-00			CAP., FXD, CER DI:0.01UF, 20%, 50V	72982	8121N058651103M
C2320	290-0530-00			CAP., FXD, ELCTLT:68UF, 204, 6V	90201	TDC686M006NLF
C2360	283-0203-00			CAP., FXD, CER DI:0.47UF, 20%, 50V	72982	8131N075651474M
C2368	283-0204-00			CAP., FXD, CER DI:0.01UF, 20%, 50V	72982	8121N058651103M
C2371	283-0204-00			CAP., FXD, CER DT:0.01UF, 20%, 50V	72982	8121N058651103M
C2373	283-0204-00			CAP., FXD, CER DI:0.01UF, 20%, 50V	72982	8121N058651103M
C2377	283-0204-00			CAP., FXD, CER DI:0.01UF, 20%, 50V	72982	8121N058651103M
C2381	283-0204-00			CAP., FXD, CER DI:0.01UF, 20%, 50V	72982	8121N058651103M
C2384	283-0204-00			CAP., FXD, CER DI:0.01VF, 20%, 50V	72982	8121N058651103M
C2386	283-0204-00			CAP., FXD, CER DI:0.01UF, 20%, 50v	72982	B121N058651103M
C2387	283-0204-00			CAP., FXD, CER DI:0.01UF, 20%, 50V	72982	8121N058651103M
C2388	283-0204-00			CAP., FXD, CER DI:0.01UF, 20%, 50V	72982	8121N058651103M

Ckt No.	Tektronix Part No	Serial/Model No. Eff	Dscont	Name & Description	Mfr Code	Mfr Part Number
C2360	283-0203-00			CAP., FXD, CER DI:0.47UF, 20%, 50V	72982	8131N075 E474M
C2368	283-0204-00			CAP., FXD, CER DI:0.01UF, 20%, 50V	72982	8121N075Z5U0103M
C2371	283-0204-00			CAP., FXD, CER DI:0.01UF, 20%, 50V	72982	8121N075Z5U0103M
C2373	283-0204-00			CAP., FXD, CER DI:0.01UF, 20%, 50V	72982	8121N075Z5U0103M
C2377	283-0204-00			CAP., FXD, CER DI:0.01UF, 20%, 50V	72982	8121N075Z5U0103M
C2381	283-0204-00			CAP., FXD, CER DI:0.01UF, 20%, 50V	72982	8121N075Z5U0103M
C2384	283-0204-00			CAP., FXD, CER DI:0.01UF, 20%, 50V	72982	8121N075Z5U0103M
C2386	283-0204-00			CAP., FXD, CER DI:0.01UF, 20%, 50V	72982	8121N075ZSU0103M
C2387	283-0204-00			CAP., FXD, CER DI:0.01UF, 20%, 50V	72982	8121N075Z5U0103M
C2388	283-0204-00			CAP., FXD, CER DI:0.01UF, 20%, 50V	72982	8121N075Z5U0103M
C2391	283-0204-00			CAP., FXD, CER DI:0.01UF, 20%, 50V	72982	8121N075Z5U0103M
C2393	283-0204-00			CAP., FXD, CER DI:0.01UF, 20%, 50V	72982	8121N075Z5U0103M
C3002	283-0238-00			CAP., FXD, CER DI:0.0IUF, 10%, 50V	72982	8121N071W5R103K
C3004	283-0177-00			CAP., FXD, CER DI:1UF, +80-20%, 25V	72982	8131N039 E 105Z
C3014	283-0641-00			CAP., FXD, MICA D:180PF, I%, 100V	00853	D151E181F0
C4094	283-0204-00			CAP., FXD, CER DI:0.01UF, 20%, 50V	72982	8121N075Z5U0103M
C4158	281-0579-00			CAP., FXD, CER DI:21PF, 5%, 500V	72982	301-050C0G0210J
C4160	281-0523-00	B010100	B010104X	CAP., FXD, CER DI:100PF, +/-20PF, 500V	72982	301-00U2M0101M
C4160	281-0523-00	X020275		CAP., FXD, CER DI:100PF, (N0M VAUE), SEL	72982	301-000U2M0101M
C4172	283-0111-00			CAP., FXD, CER DI:0.1UF, 20%, 50V	72982	8121-N088Z5U104M
C4174	283-0111-00			CAP., FXD, CER DI:0.1UF, 20%, 50V	72982	8121-N088Z5u104M
C4176	283-0111-00			CAP., FXD, CER DI:0.lUF, 20%, 50V	72982	8121-N088Z5U104M
C4178	283-0111-00			CAP., FXD, CER DI:0.1UF, 204, 50V	72982	8121-N08BZ5U104M
C4180	283-0111-00			CAP., FXD, CER DI:0.1UF, 20%, 50V	72982	8121-N08825U104M
C4182	281-0536-00			CAP., FXD, CER DI:01000P, 10%, 500V	72982	3001055XSP12K
C4184	290-0425-00			CAP., FXD, ELCTLT:100UF, , 20%, 20V	90201	THF107M020PlG1
C4186	281-0536-00			CAP., FXD, CER DI:1000PF, 10%, 500V	72982	301055x5P102K
C4189	281-0629-00	B010100	B020274	CAP., FXD, CER DI:33PF, 5%, 600V	72982	308-000C0G0330J
C4189	281-0515-00	8020275		CAP., FXD, CER DI:27PF, +/-1.35PF, 500V	72982	302-005C0G0270J
C4193	281-0523-00			CAP., FXD, CER DI:100PF, +/-20PF, 500V	72982	301-000U2M0101M
C4195	281-0504-00			CAP., FXD, CER DI:0lPF, +/-1PF, 500V	72982	301-055C0G0100F
C4196	281-0504-00			CAP., FXD, CER DII10PF, +/-1PF, 500V	72982	301-055C0C0100F
C4531	281-0579-00	XB010105	3020274	CAP., FXD, CER DIt21PF, 5%, 500V	72982	301-050C0C02L0J
C4531	281-06560 00	B020275	3030339	CAP., FXD, CZR Dti22PF, 5, 500V	72982	374-000C000220J
C4531 ‘	281-0656-00	B030340		CAP., FXD, CZR D122PF, (N0N VALUE), SEL	72982	374-000C000220J
C4532	281-0525-00	X030325		CAP., FXD, CER DS1470PF, +/-94PF, 500V	04222	7001-1364
CU433	291-0525-00			CAP., FXD, CZR DI:470PF, +/-94PF, 500V	04222	7001-1364
C4534	281-0579-00			CAP., FXD, CER DI21lPF, 5%, 50V	72982	301-050C0G0210J
C4538	281-0523-00			CAP., FXD, CER DI:100PF, +/-20PF, 500V	72982	301-000U2M0101M
C4542	283-0139-00	B010100	B010115	CAP., FXD, CER DI:150PF, 20%, 50V	51642	100-05x5F151M
C4542	283-0139-00	B010116	B030322X	CAP., FXD, CER DI:150PFP, 20, 50V (N0M VALUE), SEL	72982	8101A058B
C4545	281-0523-00			CAP., FXD, CER DI:100PF, +/-20PF, 500V	72982	301-00U2M0l0lM010
C4547	283-0330-00			CAP., FXD, CER DI:100PF, 5%, 50V	72982	8111N068C0G0101J
C4548	283-0203-00			CAP., FXD, CER DI:0.47UF, 20%, 50V	72982	8131N075 E474M
C4553	281-0525-00	B010100	B030322	CAP., FXD, CER DI:470PF, +/-94PF, 500V	04222	7001-1364
C4553	283-0631-00	B030323		CAP., FXD, MICA D:95PF, 1%, l00V	00853	D151E950F0
C4558	281-0637-00	B010100	B030322	CAP., FXD, CER DI:91PF, 5%, 500V	72982	301000Z5D910J
C4558	283-0631-00	B030323		CAP., FXD, MICA D:95PF, 1%, 100V	00853	D151E950PF0
C4561	281-0525-00	B010100	B030322	CAP., FXD, CER DI:470PF, +/-94PF, 500V	04222	7001-1364
C4561	283-0631-00	B030323	B030417	CAP., FXD, MICA D:95PF, 1%, 100V	00853	D151E950PF0
C4561	281-0605-00		B030418	CAP., FXD, CER DI:200PF, 10%, 500V	04222	7001-1375
C4571	283-0111-00	XB010116		CAP., FXD, CER DI:0.1UF, 20%, 50V	72982	8121-N088ZSU104M
C4576	283-0204-00			CAP., FXD, CER DI:0.01UF, 20%, 50V	72982	8121N075Z5U0103M

Ckt No.	Tektronix Part No	Serial/Model No. Eff	Dscont	Name & Description	Mfr Code	Mfr Part Number
C4643	283-0204-00			CAP., FXD, CER DI:0.01UF, 20%, 5V	72982	8121N058651103M
C4644	283-0204-00			CAP., FXD, CER DI:0.01UF, 20%, 50V	72982	8121N058651103M
C4646	290-0536-00			CAP., FXD, ELCTLT:10UF, 20%, 25V	90201	TDC106M025NLF
C4648	290-0527-00			CAP., F D, ELCT T:15UF, 20%, 20V	90201	TDC156M020NL
C4660	283-0111-00			CAP., FXD, CER DI:0.1UF, 20%, 50V	72982	8131N075651104M
C4662	283-0111-00			CAP., FXD, CER DI:0.lUF, 20%, 50V	72982	8131N075651104M
C4664	283-0111-00			CAP., FXD, CER DI:0.1UF, 20%, 50V	72982	8131N075651104M
C4666	283-0111-00			CAP., FXD, CER DI:0.lUF, 20%, 50V	72982	8131N075651104M
C4668	283-0111-00			CAP., FXD, CER DI:0.1UF, 20%, 50V	72982	8131N075651104M
CR3	152-0141-02			SEMIC0ND DEVICE:SLIC0N, 30V, 150MA	07910	1N4152
CR9	150-1004-00			LAMP, LED:RED, 2.5V, 15MA	08806	SSL-12
CR11	152-0141-02			SEMIC0ND DEVICE:SILIC0N, 30V, 150MA	07910	1N4152
CR16	150-1004-00			LAMP, LED:RED, 2.5V, 15MA	08806	SSL-12
CR19	150-1004-00			LAMP, LED:RED, 2.5V, 15MA	08806	SSL-12
CR24	150-1004-00			LAMP, LED:RED, 2.5V, 15MA	08806	SSL-12
CR34	150-1004-00			LAMP, LED:RED, 2.5V, 15MA	08806	SSL-12
CR38	150-1004-00			LAMP, LED:RED, 2.5V, 15MA	08806	SSL-12
CR40	150-1004-00			LAMP, LED:RED, 2.5V, 15MA	08806	SSL-12
CR42	150-1004-00			LAMP, LED:RED, 2.5V, 15MA	08806	SSL-12
CR44	150-1004-00			LA0P, LED:RED, 2.5V, 15A	08806	SSL-12
CR64	152-0141-02			SEMIC0ND DEVICE:SILIC0N, 30V, 150MA	07910	1N4152
CR66	152-0141-02			SEMIC0ND DEVICE:SILIC0N, 30V, 150MA	07910	1N4152
CR70	152-0141-02			SEMIC0ND DEVICE:SILIC0N, 30V, 150MA	07910	1N4152
CR72	152-0141-02			SEMIC0ND DEVICE:SILIC0N, 30V, 150oA	07910	1N4152
CR74	152-0141-02			SEMIC0ND DEVICE:SILIC0N, 30V, 1500MA	07910	1N4152
CR76	152-0141-02			SEMTIC0ND DEVICE:SILIC0N, 30V, 150KA	07910	1N4152
CR80	150-1004-00			LAMP, LED:RED, 2.5V, 1SMA	08806	SSL-12
CR82	150-1004-00			LAMP, LED:RED, 2.5V, 15M	08806	SSL-12
CR84	150-1004-00			LAMP, LED:RED, 2.5V, 15MA	08806	SSL-12
CR86	150-1004-00			LAMP, LED:RED, 2.5V, 1S5A	08806	SSL-12
CR87	152-0141-02			SEtMITC0ND DEVICE:SILIC0N, 30V, 150MA	07910	1N4152
CR88	150-1004-00			LAMP, LED:RED, 2.5V, 15MA	08806	SSL-12
CR89	152-0141-02			SEMIC0ND DEVICE:STLTC0N, 30V, 150MA	07910	1N4152
CR90	150-1004-00			LAMP, LED:RED, 2.5V, 15MA	08806	SSL-12
CR94	150-1033-00			LAMP, CTG:10V, 40MA, FLUSH BLUE LENS	80009	150-1033-00
CR122	152-0597-00			SEMIC0ND, DEVICE:V VAR CAP., 10%, 330PF	80009	152-0597-00
CR168	152-0322-00			SEMIC0ND DEVICE:SILIC0N, 15V	28480	5082-2672
CR178A, B	153-0061-00			SEMIC0ND DEVICE:SGNL, DUAL, 0.5PA AT 3V	80009	153-0061-00
CR192	152-0322-00			SEMIC0ND DEVICE:SDLTC0 N, l5V	28480	5082-2672
CR200A, B	153-0061-00			SEMIIC0ND DEVICE:SIGNAL, DUWAL, 0.5PA AT 3V	80009	153-0061-00
CR242	152-0141-02			SEMIC0ND DEVICE:SILIC0N, 30V, 150MA	07910	1N4152
CR252	152-0141-02			SEMIC0ND DEVICE:SILIC0N, 30V, 150MA	07910	1N4152
CR260	152-0597-00			SEMIC0ND DEVICE:V VAR CAP., 10%, 330PF	80009	152-0597-00
CR360	152-0141-02			SEMIC0ND DEVICE:SILIC0N, 30V, 150MA	07910	1N4152
CR362	152-0141-02			SEMIC0ND DEVICE:SILIC0N, 30V, 150MA	07910	1N4152
CR390	152-0153-00			SEMIC0ND DEVICE:SILIC0N, 15V, 500A	13715	FD7003
CR392	152-0322-00			SEMIC0ND DEVICE:SILIC0N, 15V	28480	5082-2672
CR554	152-0141-02			SEMIC0ND DEVICE:SILIC0N, 30V, 150KA	07910	1N4152
CR600	152-0141-02			SEMIC0ND DEVICE:SILIC0N, 30V, 150KA	07910	1N4152
CR604	152-0141-02			SEMIC0ND DEVICE:SIIC0N, 30V, 150MA	07910	14152
CR610	152-0141-02			SEMIC0ND DEVICE:SILIC0N, 30V, 150MA	07910	1N4152
CR616	152-0322-00			SEMIC0ND DEVICE:SILIC0N, 15V	28480	5082-2672
CR620	152-0141-02			SEMIC0ND DEVICE:SILIC0N, 30V, 150MA	07910	1N4152

Ckt No.	Tektronix Part No	Serial/Model No. Eff	Dscont	Name & Description	Mfr Code	Mfr Part Number
CR72	152-0141-02			SEMICOND DEVICE:SILICON, 30V, 150MA	07910	11N4152
CR74	152-0141-02			SENICOND DEVICE:SILICON, 30V, 150MA	07910	1N4152
CR76	152-0141-02			SEMICOND DEVICE:SILICON, 30V, 150MA	07910	1N4152
CR80	150-1004-00	B010100	B030489	LAMP, LED:RED, 2.5V, 15MA	08806	SSL-12
CR80	150-1040-00	B030490		LAMP, LED:RED, 5MA, 2.0V	50347	LLL-7A
CR82	150-1004-00	B010100	B030489	LAMP, LED:RED, 2.5V, 15MA	08806	SSL-12
CR82	150-1040-00	B030490		LAMP, LED:RED, 5MA, 2.0V	50347	LLL-7A
CR84	150-1004-00	B010100	B030489	LAMP, LED:RED, 2.5V, 15MA	08806	SSL-12
CR84	150-1040-00	B030490		LAMP, LED:RED, 5MA, 2.0V	50347	LLL-7A
CR86	150-1004-00	B010100	B030489	LAMP, LED:RED, 2.SV, 15MA	08806	SSL-12
CR86	150-1040-00	B030490		LAMP, LED:RED, 5MA, 2.0V	50347	LLL-7A
CR87	152-0141-02			SEMICOND DEVICE:SILICON, 30V, 150MA	07910	1N4152
CR88	150-1004-00	B010100	B030489	LAMP, LED:RED, 2.5V, 15MA	08806	SSL-12
CR88	140-1040-00	B030490		LAMP, LED:RED, 5MA, 2.0V	50347	LLL-7A
CR89	152-0141-02			SEMICOND DEVICE:SILICON, 30V, 150MA	07910	1N4152
CR90	150-1004-00	B010100	B030489	LAMP, LED:RED, 2.5V, 15MA	08806	SSL-12
CR90	150-1040-00	B030490		LAMP, LED:RED, 5MA, 2.0V	50347	LLL-7A
CR94	150-1033-00			LAMP, LED:YELLOW, 2.2V	80009	150-1033-00
CR122	152-0597-00			SEMICOND DEVICE:SILICON, 50V, 330PF	80009	152-0597-00
CR168	152-0322-00			SEMICOND DEVICE:SILICON, 15V, HOT CARRIER	28480	5082-2672
CR178A, B	153-0061-00			SEMICOND DEVICE:SIGNAL, DUAL,0.5PA AT 3V	80009	153-0061-00
CR192	152-0322-00			SEMICOND DEVICE:SILICON, 1SV, HOT CARRIER	28480	5082-2672
CR200A, B	153-0061-00			SEMICOND DEVICE:SIGNAL, DUAL, 0.5PA AT 3V	80009	153-0061-00
CR242	152-0141-02			SEMICOND DEVICE:SILICON, 30V, 150MA	07910	1N4152
CR252	152-0141-02			SEMICOND DEVICE:SILICON, 30V, 15OMA	07910	1N4152
CR260	152-0597-00			SEMICOND DEVICE: SILICON, 50V, 330PF	80009	152-0597-00
CR360	152-0141-02			SEMICOND DEVICE:SILICON, 30V, 150MA	07910	1N4152
CR362	152-0141-02			SEMICOND DEVICE:SILICON, 30V, 150MA	07910	lN4152
CR390	152-0153-00			SEMICOND DEVICE:SILICON, 15V, 50MA	80009	152-0153-00
CR392	152-0322-00			SEMICOND DEVICE:SILICON, 15V, HOT CARRIER	28480	5082-2672
CR554	152-0141-02			SEMICOND DEVICE:SILICON, 30V, 150MA	07910	1N4152
CR600	152-0141-02			SEMICOND DEVICE:SILICON, 30V, 150MA	07910	1N4152
CR604	152-0141-02			SEMICOND DEVICE:SILICON, 30V, 150A	07910	1N4152
CR610	152-0141-02			SEMICOND DEVICE:SILICON, 30V, 150MA	07910	1N4152
CR616	152-0322-00			SEMICOND DEVICE:SILICON, 15V, HOT CARRIER	28480	5082-2672
CR620	152-0141-02			SEMICOND DEVICE:SILICON, 30V, 150MA	07910	11N4152
CR622	152-0141-02			SEMICOND DEVICE:SILICON, 30V, 150MA	07910	1N4152
CR624	152-0141-02			SEMICOND DEVICE:SILICON, 30V, 150MA	07910	11N4152
CR630	152-0141-02			SEMICOND DEVICE:SILICON, 30V, 150MA	07910	1N4152
CR638	152-0141-02			SEMICOND DEVICE:SILICON, 30V, 150MA	07910	1N4152
CR640	152-0141-02			SEMICOND DEVICE:SILICON, 30V, 150MA	07910	11N4152
CR660	152-0141-02			SEMICOND DEVICE:SILICON, 30V, 150MA	07910	1N4152
CR670	152-0322-00			SEMICOND DEVICE:SILICON, 15V, HOT CARRIER	28480	5082-2672
CR672	152-0322-00			SEMICOND DEVICE:SILICON, 15V, HOT CARRIER	28480	5082-2672
CR714	152-0246-00			SEMICOND DEVICE:SILICON, 400PIV, 200MA	07910	CD12676
CR716	152-0141-02			SEMICOND DEVICE:SILICON, 30V, 150MA	07910	1N4152
CR720	152-0141-02			SEMICOND DEVICE:SILICON, 30V, 150MA	07910	1N4152
CR730	152-0141-02			SEMICOND DEVICE:SILICON, 30V, 150MA	07910	1N4152
CR731	152-0322-00			SEMICOND DEVICE:SILICON, 15V, HOT CARRIER	28480	5082-2672
CR732	152-0141-02			SEMICOND DEVICE:SILICON, 30V, 150MA	07910	1N4152
CR733	152-0141-02			SEMICOND DEVICE:SILICON, 30V, 150MA	07910	1N4152
CR734	152-0141-02			SEMICOND DEVICE:SILICON, 30V, 150MA	07910	1N4152
CR735	152-0322-00			SEMICOND DEVICE%SILICON, 15V, HOT CARRIER	28480	5082-2672

Ckt No.	Tektronix Part No	Serial/Model No. Eff	Dscont	Name & Description	Mfr Code	Mfr Part Number
CR1250	152-0322-00			SEMICOND DEVICE:SILICON, 15V	28480	5082-2672
CR1252	152-0322-00			SEMICOND DEVICE:SILICON, 15V	28480	5082-2672
CR1420	152-0141-02			SEMICOND DEVICE:SILICON, 30V, 150MA	07910	1N4152
CR1504	152-0612-00			SEMICOND DEVICE:VAR V CAP, 4V, 17.5PF	80009	152-0612-00
CR1612						
CR1616						
CR1622	153-0044-00			SEMICOND, DEVICE:SILICON, 15V, MATCHED	80009	153-0044-00
CR1626						
CR1812	152-0141-02			SEMICOND DEVICE:SILICON, 30V, 150MA	07910	1N4152
CR1813	152-0141-02			SEMICOND DEVICE:SILICON, 30V, 150MA	07910	1N4152
CR1876	152-0141-02			SEMICOND DEVICE:SILICON, 30V, 150OA	07910	1N4152
CR1888	152-0141-02			SEMICOND DEVICE:SILICON, 30V, 150MA	07910	1N4152
CR1908	152-0141-02			SEMICOND DEVICE:SILICON, 30V, 15OMA	07910	1N4152
CR1910	152-0141-02			SEMICOND DEVICE:SILICON, 30V, 150MA	07910	1N4152
CR2012	152-0141-02			SEMICOND DEVICE:SILICON, 30V, 150MA	07910	1N4152
CR2027	152-0141-02			SEMICOND DEVICE:SILICON, 30V, 150MA	07910	1N4152
CR2032	152-0622-00			SEMICOND DEVICE:SILICON, V VAR CAP., 15V, 115PF	80009	152-0622-00
CR2033	152-0141-02			SEMICOND DEVICE:SILICON, 30V, 15OKA	07910	1N4152
CR2050	152-0153-00			SEMICOND DEVICE:SILICON, 15V, 5OMA	13715	FD7003
CR2226	152-0246-00			SEMICOND DEVICE:SILICON, 400PIV, 200MA	07910	CD12676
CR2320	152-0141-02			SEMICOND DEVICE:SILICON, 30V, 150MA	07910	1N4152
CR2322	152-0141-02			SEMICOND DEVICE:SILICON, 30V, 150MA	07910	1N4152
CR2340	152-0141-02			SEMICOND DEVICE:SILICON, 30V, 150MA	07910	1N4152
CR2342	152-0141-02			SEMICOND DEVICE:SILICON, 30V, 150A	07910	1N4152
CR2344	152-0141-02			SEMICOND DEVICE:SILICON, 30V, 150MA	07910	1N4152
CR2346	152-0141-02			SENICOND DEVICE:SILICON, 30V, 150MA	07910	1N4152
CR2348	152-0141-02			SEMICOND DEVICE:SILICON, 30V, 150MA	07910	1N4152
CR2356	152-0141-02			SEMICOND DEVICE:SILICON, 30V, 3150MA	07910	1N4152
CR2360	152-0141-02			SEMICOND DEVICE:SILICON, 30V, 150MA	07910	1N4152
CR2362	152-0141-02			SEMICOND DEVICE:SILICON, 30V, 150MA	07910	1N4152
CR2366	152-0141-02			SEMICOND DEVICE:SILICON, 30V, 150MA	07910	1N4152
CR2370	152-0141-02			SEMICOND DEVICE:SILICON, 30V, 150MA	07910	1N4152
CR2372	152-0141-02			SEMICOND DEVICE:SILICON, 30V, 150MA	07910	1N4152
CR2374	152-0141-02			SEMICOND DEVICE:SILICON, 30V, 150MA	07910	1N4152
CR2376	152-0141-02			SEMICOND DEVICE:SILICON, 30V, 150MA	07910	1N4152
CR2378	152-0141-02			SEMICOND DEVICE:SILICON, 3WOV, 150MA	07910	1N4152
CR3008	152-0075-00			SEMICOND DEVICE:GE, 25V, 40NA	80009	152-0075-00
CR3012	152-0322-00			SEMICOND DEVICE:SILICON, 15V	28480	5082-2672
CR3014	152-0141-02			SEMICOND DEVICE:SILICON, 30V, 150MA	07910	1N4152
CR3022	152-0322-00			SEMICOND DEVICE:SILICON, 15V	28480	5082-2672
CR3024	152-0141-02			SEMICOND DEVICE:SILICON, 30V, 150MA	07910	1N4152
CR3032	152-0322-00			SEMICOND DEVICE:SILICON, 15V	28480	5082-2672
CR3034	152-0322-00			SEMICOND DEVICE:SILICON, 15V	28480	5082-2672
CR3038	152-0141-02			SEMICOND DEVICE:SILICON, 30V, 150MA	07910	1N4152
CR4189	152-0141-02			SEMICOND DEVICE:SILICON, 30V, 150MA	07910	1N4152
CR4553	152-0141-02			SEMICOND DEVICE:SILICON, 30V, 150MA	07910	1N4152
CR4602	152-0322-00			SEMICOND DEVICE:SILICON, 15V	28480	5082-2672
CR4611	152-0141-02			SEMICOND DEVICE:SILICON, 30V, 150MA	07910	1N4152
CR4612	152-0141-02			SEMICOND DEVICE:SILICON, 30V, 150MA	07910	1N4152
E266	276-0507-00	XB010150		SHIELDING BEAD, :0.6UH	78488	57-0180-7D
E268	276-0507-00	XB101050		SHIELDING BEAD, :0.6UH	78488	57-0180-7D
E276	276-0507-00	XB010150		SHIELDING BEAD, :0.6UH	78488	57-0180-7D
E278	276-0507-00	XB010150		SHIELDING BEAD, :0.6UH	78488	57-0180-7D

Ckt No.	Tektronix Part No	Serial/Model No. Eff	Dscont	Name & Description	Mfr Code	Mfr Part Number
CR2033	152-0141-02			SEMICOND DEVICE:SILICON, 30V, 150MA	07910	1N4152
CR2050	152-0153-00			SEMICOND DEVICE:SILICON, 15V, 50MA	80009	152-0153-00
CR2226	152-0246-00			SEMICOND DEVICE:SILICON, 400PIV, 200MA	07910	CD12676
CR2320	152-0141-02			SEMICOND DEVICE:SILICON, 30V, 150MA	07910	1N4152
CR2322	152-0141-02			SEMICOND DEVICE:SILICON, 30V, 150MA	07910	1N4152
CR2340	152-0141-02			SEMICOND DEVICE:SILICON, 30V, 150MA	07910	1N4152
CR2342	152-0141-02			SEMICOND DEVICE:SILICON, 30V, 150MA	07910	1N4152
CR2344	152-0141-02			SEMICOND DEVICE:SILICON, 30V, 150MA	07910	1N4152
CR2346	152-0141-02			SEMICOND DEVICE:SILICON, 30V, 150MA	07910	1N4152
CR2348	152-0141-02			SEMICOND DEVICE:SILICON, 30V, 150MA	07910	1N4152
CR2356	152-0141-02			SEMICOND DEVICE:SILICON, 30V, 150MA	07910	1N4152
CR2360	152-0141-02			SEMICOND DEVICE:SILICON, 30V, 150MA	07910	1N4152
CR2362	152-0141-02			SEMICOND DEVICE:SILICON, 30V, 150MA	07910	1N4152
CR2364	152-0141-02			SEMICOND DEVICE:SILICON, 30V, 150MA	07910	1N4152
CR2366	152-0141-02			SEMICOND DEVICE:SILICON, 30V, 150MA	07910	1N4152
CR2370	152-0141-02			SEMICOND DEVICE:SILICON, 30V, 150MA	07910	1N4152
CR2372	152-0141-02			SEMICOND DEVICE:SILICON, 30V, 150MA	07910	1N4152
CR2374	152-0141-02			SEMICOND DEVICE:SILICON, 30V, 150MA	07910	1N4152
CR2376	152-0141-02			SEMICOND DEVICE:SILICON, 30V, 150MA	07910	1N4152
CR2378	152-0141-02			SEMICOND DEVICE:SILICON, 30V, 150MA	07910	1N4152
CR3008	152-0075-00			SEMICOND DEVICE:GE, 25V, 40MA	80009	152-0075-00
CR3012	152-0322-00			SEMICOND DEVICE:SILICON, 15V, HOT CARRIER	28480	5082-2672
CR3014	152-0141-02			SEMICOND DEVICE:SILICON, 30V, 150MA	07910	1N4152
CR3022	152-0322-00			SEMICOND DEVICE:SILICON, 15V, HOT CARRIER	28480	5082-2672
CR3024	152-0141-02			SEMICOND DEVICE:SILICON, 30V, 150MA	07910	1N4152
CR3032	152-0322-00			SEMICOND DEVICE:SILICON, 15V, HOT CARRIER	28480	5082-2672
CR3034	152-0322-00			SEMICOND DEVICE:SILICON, 15V, HOT CARRIER	28480	5082-2672
CR3038	152-0141-02			SEMICOND DEVICE:SILICON, 30V, 150MA	07910	1N4152
CR4189	152-0141-02			SEMICOND DEVICE:SILICON, 30V, 150MA	07910	1N4152
CR4553	152-0141-02			SEMICOND DEVICE:SILICON, 30V, 150MA	07910	1N4152
CR4602	152-0322-00			SEMICOND DEVICE:SILICON, 15V, HOT CARRIER	28480	5082-2672
CR4611	152-0141-02			SEMICOND DEVICE:SILICON, 30V, 15OMA	07910	1N4152
CR4612	152-0141-02			SEMICOND DEVICE:SILICON, 30V, 150MA	07910	1N4152
E266	276-0507-00	XB010150		SHIELDING BEAD, :0.6UH	78488	57-0180-7D 500B
E268	276-0507-00	XB010150		SHIELDING BEAD, :0.6UH	78488	57-0180-7D 500B
E276	276-0507-00	XB010150		SHIELDING BEAD, :0.6UH	78488	57-0180-7D 500B
E278	276-0507-00	XB010150		SHIELDING BEAD, :0.6UH	78488	57-0180-7D 500B
FL1300	119-0608-00			FILTER BAND PAS:CRYSTAL, 10.7MH	80009	119-0608-00
J10	131-1606-01			CONNECTOR, RCPT, :W/22-44 CONTACTS	80009	131-1606-01
J20	131-1617-01			CONNECTOR, RCPT, :W/18-36 CONTACTS	80009	131-1617-01
J94	136-0387-00			JACK, TIP:GRAY	71279	450-4352-01-0318
J96	103-0180-01			ADAPTER, CONN:FEMALE, BNC	80009	103-0180-01
J530	131-1617-01			CONNECTOR, RCPT, :W/18-36 CONTACTS	80009	131-1617-01
J2210	131-1616-00			CONNECTOR, RCPT, :18/36 CONTACT	05574	3VH15/1JV15
J3020	131-1617-01			CONNECTOR, RCPT, :w/18-36 CONTACTS	80009	131-1617-01
J3030	131-1617-01			CONNECTOR, RCPT, :w/18-36 CONTACTS	80009	131-1617-01
L120	108-0551-00			COIL, RF:14UH	80009	108-0551-00
L122	108-0552-00			COIL, RF:80NH	80009	108-0552-00
L124	108-0420-00			COIL, RF:60NH	80009	108-0420-00
L126	108-0551-00			COIL, RF:14UH	80009	108-0551-00
L128	108-0598-00			COIL, RF:200UH	80009	108-0598-00

Ckt No.	Tektronix Part No	Serial/Model No. Eff	Dscont	Name & Description	Mfr Code	Mfr Part Number
L1730	114-0341-00			COIL, RF:7.13-7.35MH	80009	114-0341-00
L1780	114-0341-00			COIL, RF:7.13-7.35MH	80009	114-0341-00
L1820	114-0341-00			COIL, RF:7.13-7.35MH	80009	114-0341-00
L1856	114-0342-00			COIL, RF:0.95-1.05MH		
L1860	114-0342-00			COIL, RF:0.95-1.05MHH	80009	114-0342-00
L1864	114-0342-00			COIL, RF:0.95-1.05MH	80009	114-0342-00
L1870	114-0342-00			COIL, RF:0.95-1.05MH	80009	114-0342-00
L1872	114-0342-00			COIL, RF:0.95-1.05MH	80009	114-0342-00
L1916	114-0342-00			COIL, RF:0.95-1.05MH	80009	114-0342-00
L1918	114-0342-00			COIL, RF: 0.95-1.05MH		
L2032	SELECTED			COIL, RF:1.4UH (NOMINAL VALUE) , SEL		
L2240	108-0598-00			COIL, RF:200UH	80009	108-0598-00
L2266	108-0598-00			COIL, RF:200UH	80009	108-0598-00
L2268	108-0598-00			COIL, RF:200UH	80009	108-0598-00
L2360	108-0598-00			COIL, RF:200UH	80009	108-0598-00
L3004	108-0598-00			COIL, RF:200UH	80009	108-0598-00
L4182	108-0598-00			COIL, RF:200UH	80009	108-0598-00
P122	131-1493-00			CONTACT, ELEC:TEST POINT STRAP	80009	131-1493-00
P124	131-1493-00			CONTACT, ELEC:TEST POINT STRAP	80009	131-1493-00
P246	131-1493-00			CONTACT, ELEC:TEST POINT STRAP	80009	131-1493-00
P260	131-1493-00			CONTACT, ELEC:TEST POINT STRAP	80009	131-1493-00
P262	131-1493-00			CONTACT, ELEC:TEST POINT STRAP	80009	131-1493-00
P390	131-1493-00			CONTACT, ELEC:TEST POINT STRAP	80009	131-1493-00
P3008	131-0993-00			LINK, TERM.CONNE:2 WIRE BLACK	00779	530153-2
Q45	151-1066-00			TRANSISTOR:SILICON, FE, P-CHANNEL	80009	151-1066-00
Q55	151-1066-00			TRANSISTOR:SILICON, FE, P-CHANNEL	80009	151-1066-00
Q70	151-0190-00			TRANSISTOR:SILICON, NPN	80009	151-0190-00
Q125	151-0190-00			TRANSISTOR:SILICON, NPN	80009	151-0190-00
Q130	151-0230-00			TRANSISTOR:SILICON, NPN	02735	38520
Q135	151-0230-00			TRANSISTOR:SILICON, NPN	02735	38520
Q230	151-1012-00			TRANSISTOR:SILICON, FE, N-CHANNEL	22229	F1585
Q240	151-0195-00			TRANSISTOR:SILICON, NPN	80009	151-0195-00
Q245	151-0195-00			TRANSISTOR:SILICON, NPN	80009	151-0195-00
Q260	151-0190-00			TRANSISTOR:SILICON, NPN	80009	151-0190-00
Q270	151-0230-00			TRANSISTOR:SILICON, NPN	02735	38520
Q275	151-0230-00			TRANSISTOR: SILICON, NPN	02735	38520
Q365	151-0188-00			TRANSISTOR:SILICON, PNP	01295	2N3906
Q395	151-0216-00			TRANSISTOR:SILICON, PNP	01713	MPS6523
Q525	151-0188-00			TRANSISTOR:SILICON, PNP	01295	2N3906
Q570	151-0456-00			TRANSISTOR:SILICON, NPN	80009	151-0456-00
Q575	151-0456-00			TRANSISTOR:SILICON, NPN	80009	151-0456-00
Q591	151-0188-00			TRANSISTOR:SILICON, PNP	01295	2N3906
Q621	151-1021-00			TRANSISTOR:SILICON, JFE	17856	FN815
Q680	151-1078-00			TRANSISTOR:SILICON, JFE, N-CHANNEL	80009	151-1078-00
Q700	151-1022-00			TRANSISTOR:SILICON, JFE, SEL FROM 2N4392	80009	151-1022-00
Q705	151-0188-00			TRANSISTOR:SILICON, PNP	01295	2N3906
Q735	151-1079-00			TRANSISTOR:MOS FE, SILICON, N CHANNEL	15818	U1897E
Q765	151-1079-00			TRANSISTOR:MOS FE, SILICON, N CHANNEL	15818	U1897E
Q1040	151-0190-00			TRANSISTOR:SILICON, NPN	80009	151-0190-00
Q1060	151-1021-00			TRANSISTOR:SILICON, JFE	17856	FN815
Q1070	151-0190-00			TRANSISTOR:SILICON, NPN	80009	151-0190-00
Q1080	151-0190-00			TRANSISTOR:SILICON, NPN	80009	151-0190-00

Ckt No.	Tektronix Part No	Serial/Model No. Eff	Dscont	Name & Description	Mfr Code	Mfr Part Number
L2360	108-0598-00			COIL, RF:200UH	80009	108-0598-00
L3004	108-0598-00			COIL, RF:200UH	80009	108-0598-00
L4182	108-0598-00			COIL, RF:200UH	80009	108-0598-00
P122	131-1493-00			CONTACT, ELEC:TEST POINT STRAP	80009	131-1493-00
P124	131-1493-00			CONTACT, ELEC:TEST POINT STRAP	80009	131-1493-00
P246	131-1493-00			CONTACT, ELEC:TEST POINT STRAP	80009	131-1493-00
P260	131-1493-00			CONTACT, ELEC:TEST POINT STRAP	80009	131-1493-00
P262	131-1493-00			CONTACT, ELEC:TEST POINT STRAP	80009	131-1493-00
P390	131-1493-00			CONTACT, ELEC:TEST POINT STRAP	80009	131-1493-00
P3008	131-0993-00			LINK, TERM.CONNE:2 WIRE BLACK	00779	530153-2
Q45	151-1066-00			TRANSISTOR:SILICON, FE, P-CHANNEL	80009	151-1066-00
Q55	151-1066-00			TRANSISTOR:SILICON, FE, P-CHANNEL	80009	151-1066-00
Q70	151-0190-00			TRANSISTOR:SILICON, NPN	80009	151-0190-00
Q125	151-0190-00			TRANSISTOR:SILICON, NPN	80009	151-0190-00
Q130	151-0230-00			TRANSISTOR:SILICON, NPN	80009	151-0230-00
Q135	151-0230-00			TRANSISTOR:SILICON, NPN	80009	151-0230-00
Q230	151-1012-00			TRANSISTOR:SILICON, FE, N-C8ANNEL	80009	151-1012-00
Q240	151-0195-00			TRANSISTOR:SILICON, NPN	80009	151-0195-00
Q245	151-0195-00			TRANSISTOR:SILICON, NPN	80009	151-0195-00
Q260	151-0190-00			TRANSISTOR:SILICON, NPN	80009	151-0190-00
Q270	151-0230-00			TRANSISTOR:SILICON, NPN	80009	151-0230-00
Q275	151-0230-00			TRANSISTOR:SILICON, NPN	80009	151-0230-00
Q365	151-0188-00			TRANSISTOR:SILICON, PNP	01295	2N3906
Q395	151-0216-00			TRANSISTOR:SILICON, PNP	04713	MPS6523
Q525	151-0188-00			TRANSISTOR:SILICON, PNP	01295	2N3906
Q570	151-0456-00			TRANSISTOR:SILICON, NPN	80009	151-0456-00
Q575	151-0456-00			TRANSISTOR:SILICON, NPN	80009	151-0456-00
Q591	151-0188-00			TRANSISTOR:SILICON, PNP	01295	2N3906
Q621	151-1021-00			TRANSISTOR:SILICON, JFE	80009	151-1021-00
Q680	151-1078-00			TRANSISTOR:SILICON, JFE, N-CHANNEL	80009	151-1078-00
Q700	151-1022-00			TRANSISTOR: SILICON, JFE, SEL FROM 2N4392	80009	151-1022-00
Q705	151-0188-00			TRANSISTOR:SILICON, PNP	01295	2N3906
Q735	151-1079-00			TRANSISTOR:SILICON, FE, N-CHANNEL	80009	151-1079-00
Q765	151-1079-00			TRANSISTOR:SILICON, FE, N-CHANNEL	80009	151-1079-00
Q1040	151-0190-00			TRANSISTOR: SILICON, NPN	80009	151-0190-00
Q1060	151-1021-00			TRANSISTOR:SILICON, JFE	80009	151-1021-00
Q1070	151-0190-00			TRANSISTOR:SILICON, NPN	80009	151-0190-00
Q1080	151-0190-00			TRANSISTOR:SILICON, NPN	80009	151-0190-00
Q1085	151-0190-00			TRANSISTOR: SILICON, NPN	80009	151-0190-00
Ql110	151-1021-00			TRANSISTOR:SILICON, JFE	80009	151-1021-00
Q1115	151-0190-00			TRANSISTOR:SILICON, NPN	80009	151-0190-00
Q1130	151-0190-00			TRANSISTOR:SILICON, NPN	80009	151-0190-00
Q1140	151-1021-00			TRANSISTOR:SILICON, JFE	80009	151-1021-00
Q1170	151-1021-00			TRANSISTOR:SILICON, JFE	80009	151-1021-00
Q1180	151-0190-00			TRANSISTOR:SILICON, NPN	80009	151-0190-00
Q1200	151-0190-00			TRANSISTOR:SILICON, NPN	80009	151-0190-00
Q1230	151-0188-00			TRANSISTOR:SILICON, PNP	01295	2N3906
Q1235	151-0188-00			TRANSISTOR:SILICON, PNP	01295	2N3906
Q1305	151-0442-00			TRANSISTOR:SILICON, NPN	80009	151-0442-00
Q1325	151-0288-00			TRANSISTOR:SILICON, NPN	80009	151-0288-00
Q1420	151-0188-00			TRANSISTOR:SILICON, PNP	01295	2N3906
Q1500	151-0441-00			TRANSISTOR:SILICON, NPN	80009	151-0441-00

Ckt No.	Tektronix Part No	Serial/Model No. Eff	Dscont	Name & Description	Mfr Code	Mfr Part Number
Q2350	151-1045-00			TRANSISTOR:SILICON, JFE, P-CHANNEL	80009	151-1045-00
Q2355	151-1097-00			TRANSISTOR:SILICON, FE, SELECTED	27014	SF88010
Q2360	151-1097-00			TRANSISTOR:SILICON, FE, SELECTED	27014	SF88010
Q2365	151-1097-00			TRANSISTOR:SILICON, FE, SELECTED		
Q2370	151-1097-00			TRANSISTOR: SILICON, FE, SELECTED		
Q3000	151-0190-00			TRANSISTOR:SILICON, NPN	80009	151-0190-00
Q3020	151-0188-00			TRANSISTOR: SILICON, PNP		
R3	315-0226-00			RES., FXD, CMPSN:22M OHM, 5%, 0.25W	01121	CB2265
R4	315-0104-00			RES., FXD, CMPSN:100K OH0, 5%, 0.25W	01121	CB1045
R6	315-0274-00			RES., FXD, CMPSN:270K OHM, 5%, 0.25W	01121	CB2745
R7	315-0112-00			RES., FXD, CMPSN:1.1K OHM, 5%, 0.25W	01121	CB1125
R8	315-0275-00			RES., FXD, CMPSN:2.T7M OHM, 5, 0.25W	01121	CB2755
R9	315-0331-00			RES., FXD, C(PSN:330 OHM, 5%, 0.25W	01121	CB3315
R11	315-0226-00			RES., FXD, CMPSN:22M OHM, 5%, 0.25W	01121	CB2265
R12	315-0112-00			RES., FXD, CMPSN:1.1K OHM, 5%, 0.25W	01121	CB1125
R14	315-0275-00			RES., FXD, CMPSN:2.7M OHM, 5%, 0.25W	01121	CB2755
R16	315-0331-00			RES., FXD, CMPSN:330 OHM, 5%, 0.25W	01121	CB3315
R17	315-0112-00			RES., FXD, CMPSN:1.1K OHM, 5%, 0.25W	01121	CB1125
R18	315-0275-00			RES., FXD, CMPSN:2.7M OHM, 5%, 0.25W	01121	CB2755
Rl19	315-0331-00			RES., FXD, CMPSN:330 OHM, S5, 0.25W	01121	CB3315
R20	315-0112-00			RES., FXD, CMPSN:1.1K OHM, 5%, 0.25W	01121	CB1125
R22	315-0275-00			RES., FXD, CMPSN:2.7M OHM, 5%, 0.25W	01121	CB2755
R24	315-0331-00			RES., FXD, CMPSN:330 OHM, 5%, 0.25W	01121	CB3315
R30	315-0112-00			RES., FXD, CMPSN:1.1K OHM, 5%, 0.25W	01121	CBR125
R32	315-0275-00			RES., FXD, CMPSN:2.7M OHM, 5%, 0.25W	01121	CB2755
R34	315-0331-00			RES., FXD, CMPSN:330 OHM, 5%, 0.25W	01121	CB3315
R36	315-0112-00			RES., FXD, CMPSN:1.1K OHM, %5, 0.25W	01121	CB1125
R37	315-0275-00			RES., FXD, CMPSN:2.7M OH0, 5%, 0.25W	01121	CB2755
R38	315-0331-00			RES., FXD, CMPSN:330 OHM, 5%, 0.25W	01121	CB3315
R40	315-0331-00			RES., FXD, CMPSN:330 OHM, 5%, 0.25W	01121	CB3315
R41	315-0104-00			RES., FXD, CMPSN:100K OHM, 5%, 0.25W	01121	CB1045
R42	315-0331-00			RES., FXD, CMPSN:330 OHM, 5%, 0.25W	01121	CB3315
R44	315-0331-00			RES., FXD, CMPSN:330 OHM, 5%, 0.25W	01121	CB3315
R451	311-1714-01			RES., VAR, NONWIR:15K OH4, 20%, 1W	80009	311-1714-01
R46	321-0338-00			RES., FXD, FILM:32.4K OHM, 1%, 0.125W	75042	CEATO-3242F
R50	311-1714-01			RES., VAR, NONWIR:15K OHM, 20%, 1W	80009	311-1714-01
R52	315-0104-00			RES., FXD, CMPSN:100K OHM, 5%, 0.25W	01121	CB1045
R54	315-0102-00			RES., FXD, CMPSN:1K OHM, 5%, 0.25W	01121	CB1025
R55	311-1005-00			RES., VAR, NONWIR:15K 0HM, 10%, 0.50W	12697	382-CM40952
R56	315-0102-00			RES., FXD, CMPSN:1K OHM, 5%, 0.25W	01121	CB1025
R60	307-0410-00	B010100	B020169	RES., FXD, FILM:15 RES., NETWORK	73138	898-1-R200K
R60	307-0504-00	B020170		RES., NETWORK:300K OHP, 24		
R62	323-0151-00	B010100	B020169	RES., FXD, FILM:365 OHM, 1%, 0.50W	75042	CECTO-3650F
R62	323-0175-00	B020170		RES., FXD, FILM:649 OHM, 1%, 0.50W	75042	CECTO-6490P
R63	323-0151-00	B010100	B020169	RES., FXD, FILM:365 OHM, 1%, 0.50W	75042	CECTO-3650F
R63	323-0175-00	B020170		RES., FXD, FILM:649 OHM, 1%, 0.50W	75042	CECTO-6490F
R64	315-0331-00			RES., FXD, CMPSN:330 OHM, 5%, 0.25W	01121	CB3315
R65	311-1005-00			RES., VAR, NONWIR:15K OHM, 10%, 0.50W	12697	382-CM40952
R86	315-0331-00			RES., FXD, CMPSN:330 OHM, 5%, 0.25W	01121	CB3315
R88	315-0331-00			RES., FXD, CMPSN:330 OHM, 5%, 0.25W	01121	CB3315
R92	315-0181-00			RES., FXD, CMPSN:180 OHM, 5%, 0.25W	01121	CB1815
R95	311-1005-00			RES., VAR, NONWIR:15K OHM, 10%, 0.50W	12697	382-CM40952

[1]Furnished as a unit with S45
[2]Furnished as a unit with S96

Ckt No.	Tektronix Part No	Serial/Model No. Eff	Dscont	Name & Description	Mfr Code	Mfr Part Number
R11	315-0226-00			RES., FXD, CMPSN:22M OHM, 5%, 0.25W	01121	CB2265
R12	315-0112-00			RES., FXD, CMPSN:1.1K OHM, 5%, 0.25W	01121	CB1125
R14	315-0275-00			RES., FXD, CMPSN:2.7M OHM, 5%, 0.25W	01121	CB2755
R16	315-0331-00			RES., FXD, CMPSN:330 OHM, 5%, 0.25W	01121	CB3315
R17	315-0112-00			RES., FXD, CMPSN:1.1K OHM, 5%, 0.25W	01121	CB1125
R18	315-0275-00			RES., FXD, CMPSN:2.7M OHM, 5%, 0.25W	01121	CB2755
R19	315-0331-00			RES., FXD, CMPSN:330 OHM, 5%, 0.25W	01121	CB3315
R20	315-0112-00			RES., FXD, CMPSN:1.lK OHM, 5%, 0.25W	01121	CB1125
R22	315-0275-00			RES., FXD, CMPSN:2.7M OHM, 5%, 0.25W	01121	CB2755
R24	315-0331-00			RES., FXD, CMPSN:330 OHM, 5%, 0.25W	01121	CB3315
R30	315-0112-00			RES., FXD, CMPSN:1.lK OHM, 5%, 0.25W	01121	CB1125
R32	315-0275-00			RES., FXD, CMPSN:2.7M OHM, 5%, 0.25W	01121	CB2755
R34	315-0331-00			RES., FXD, CMPSN:330 OHM, 5%, 0.25W	01121	CB3315
R36	315-0112-00			RES., FXD, CMPSN:1.1K OHM, 5%, 0.25W	01121	CB1125
R37	315-0275-00			RES., FXD, CMPSN:2.7M OHM, 5%, 0.25W	01121	CB2755
R38	315-0331-00			RES., FXD, CMPSN:330 OHM, 5t, 0.25W	01121	CB3315
R40	315-0331-00			RES., FXD, CMPSN:330 OHM, 5%, 0.25W	01121	CB3315
R41	315-0104-00			RES., FXD, CMPSN:100K OHM, 5%, 0.25W	01121	CB1045
R42	315-0331-00			RES., FXD, CMPSN:330 OHM, 5%, 0.25W	01121	CB3315
R44	315-0331-00			RES., FXD, CMPSN:330 OHM, 5%, 0.25W	01121	CB3315
R45 [1]	311-1714-01			RES., VAR, NONWIR:15K OHM, 20%, 1W	80009	311-1714-01
R46	321-0338-00			RES., FXD, FILM:32.4K OHM, 1%, 0.125W	91637	MFF1816G32401F
R50	311-1714-01			RES., VAR, NONWIR:15K OHM, 20%, 1W	80009	311-1714-01
R52	315-0104-00			RES., FXD, CMPSN:100K OHM, 5%, 0.25W	01121	CB1045
R54	315-0102-00			RES., FXD, CMPSN:1K OHM, 5%, 0.25W	01121	CB1025
R55	311-1005-00			RES., VAR, NONWIR:15K OHM, 10%, 0.50W	12697	382-CM40952
R56	315-0102-00			RES., FXD, CMPSN:1K OHM, 5%, 0.25W	01121	CB1025
R60	307-0410-00	B010100	B020169	RES., FXD, FILM:15 RES., NETWORK	73138	1898-83-0
R60	307-0504-00	B020170		RES., NETWORK:300K OHM, 2%		
R62	323-0151-00	B010100	B020169	RES., FXD, FILM:365 OHM, 1%, 0.50W	75042	CECTO-3650F
R62	323-0175-00	B020170		RES., FXD, FILM:649 OHM, 1%, 0.50W	75042	CECTO-6490F
R63	323-0151-00	B010100	B020169	RES., FXD, FILM:365 OHM, 1%, 0.50W	75042	CECTO-3650F
R63	323-0175-00	B020170		RES., FXD, FIILM:649 OHM, 1%, 0.50W	75042	CECTO-6490F
R64	315-0331-00			RES., FXD, CMPSN:330 OHM, 5%, 0.25W	01121	CB3315
R65	311-1005-00			RES., VAR, NONWIR:15K OHM, 10%, 0.50W	12697	382-CM40952
R86	315-0331-00			RES., FXD, CMPSN:330 OHM, 5%, 0.25W	01121	CB3315
R88	315-0331-00			RES., FXD, CMPSN:330 OHM, 5%, 0.25W	01121	CB3315
R92 [2]	315-0181-00			RES., FXD, CMPSN:180 OHM, 5%, 0.25W	01121	CB1815
R95	311-1005-00			RES., VAR, NONWIR:15K OHM, 10%, 0.50W	12697	382-CM40952
R120	315-0201-00			RES., FXD, CMPSN:200 OHM, 5%, 0.25W	01121	CB2015
R121	315-0201-00			RES., FXD, CMPSN:200 OHM, 5%, 0.25W	01121	CB2015
R122	307-0103-00			RES., FXD, CMPSN:2.7 OHM, 5%, 0.25W	01121	CB27G5
R128	315-0621-00			RES., FXD, CMPSN:620 OHM, 5%, 0.25W	01121	CB6215
R129	315-0185-00			RES., FXD, CMPSN:1.8M OHM, 5%, 0.25W	01121	CB1855
R130	315-0510-00			RES., FXD, CMPSN:51 OHM, 5%, 0.25W	01121	CB5105
R132	321-0241-00			RES., FXD, FIILM:3.16K OHM, 1%, 0.125W	91637	MFF1816G31600F
R133	315-0201-00			RES., FXD, CMPSN:200 OHM, 5%, 0.25W	01121	CB2015
R134	315-0201-00			RES., FXD, CMPSN:200 OHM, 5%, 0.25W	01121	CB2015
R136	315-0220-00			RES., FXD, CMPSN:22 OHM, 5%, 0.25W	01121	CB2205
R137	315-0270-00			RES., FXD, CMPSN:27 OHM, 5%, 0.25W	01121	CB2705
R138	321-0241-00			RES., FXD, FILM:3.16K OHM, 1%, 0.125W	91637	MFF1816G31600F
R152	321-0399-00			RES., FXD, FILM:140X OHM, 1%, 0.125W	91637	MFF1816G14002F
R154	315-0201-00			RES., FXD, CMPSN:200 OHM, 5%, 0.25W	01121	CB2015

[1]Furnished as a unit with S45.
[2]Furnished as a unit with S96.

Ckt No.	Tektronix Part No	Serial/Model No. Eff	Dscont	Name & Description	Mfr Code	Mfr Part Number
R244	315-0512-00			RES., FXD, CMPSN:5.1K OHM, 5%, 0.25W	01121	CB5125
R246	315-0113-00			RES., FXD, CMPSN:11K OHM, 5%, 0.25W	01121	CB1135
R248	315-0512-00			RES., FXD, CMPSN:5.1K OHM, 5%, 0.25W	01121	CB5125
R252	321-0414-00			RES., FXD, FILM:200K OHM, 1%, 0.125W	75042	CEATO-2003F
R254	315-0750-00			RES., FXD, CMPSN:75 OHM, 5%, 0.25W	01121	CB7505
R255	311-1260-00			RES., VAR, NONWIR:250 OHM, 10%, 0.50W	73138	62PT-345-0
R256	307-0103-00			RES., FXD, CMPSN:2.7 OHM, 5%, 0.25W	01121	CB27G5
R258	315-0201-00			RES., FXD, CMPSN:200 OHM, 5%, 0.25w	01121	CB2015
R259	315-0201-00			RES., FXD, CMPSN:200 OHM, 5%, 0.25W	01121	CB2015
R261	315-0681-00			RES., FXD, CMPSN:680 OHM, 5%, 0.25W	01121	CB6815
R266	315-0201-00			RES., FXD, CMPSN:200 OHM, 5%, 0.25W	01121	CB2015
R268	315-0201-00			RES., FXD, CMPSN:200 OHM, 5%, 0.25W	01121	CB2015
R269	315-0102-00			RES., FXD, CMPSN:1K OHM, 5%, 0.25W	01121	CB1025
R270	315-0242-00			RES., FXD, CKPSN:2.4K OHM, 5%, 0.25W	01121	CB2425
R272	321-0399-00			RES., FXD, FILM:140K OHM, 1%, 0.125W	75042	CEATO-1403F
R273	316-0565-00			RES., FXD, CMPSN:5.6M OHM, 10%, 0.25W	01121	CB5651
R274	315-0201-00			RES., FXD, CMPSN:200 OHM, 5%, 0.25W	01121	CB2015
R275	315-0270-00			RES., FXD, CMPSN:27 OHM, 5%, 0.25W	01121	CB2705
R276	321-0241-00			RES., FXD, FILM:3.16K OHM, 1%, 0.125W	75042	CEATO-3161F
R277	321-0241-00			RES., FXD, FILM:3.16K OHM, 1%, 0.125W	75042	CEATO-3161F
R278	315-0220-00			RES., FXD, CMPSN:22 OHM, 5%, 0.25W	01121	CB2205
R279	315-0510-00			RES., FXD, CMPSN:51 OHM, 5%, 0.25W	01121	CB5105
R280	321-0327-03			RES., FXD, FILM:24.9K OHM, 0.50%, 0.125W	91637	MFF1816D24901C
R282	321-0310-00			RES., FXD, FILM:16.5K OHM, 1%, 0.125W	75042	CEATO-1652C
R284	321-0748-06			RES., FXD, FILM:4.95K OHM, (NOM VALUE) , SEL	75042	CEAT9-4951C
R2B6	321-0318-07			RES., FXD, FILM:20K OHM, 0.1%, 0.125W	91637	MFF1816C200018
R287	321-0620-00			RES., FXD, FILM:8.45K OHM, 0.25%, 0.125W	75042	CEAT2-8451C
R288	321-0631-03			RES., FXD, FILM:12.5K OHM, 0.25W, 0.125W	91637	MFF1816G12501C
R290	315-0330-00			RES., FXD, CMPSN:33 OHM, 5%, 0.25W	01121	CB3305
R292	315-0330-00			RES., FXD, CMPSN:33 OHM, 5%, 0.25W	01121	CB3305
R294	315-0330-00			RES., FXD, CMPSN:33 OHM, 5%, 0.25W	01121	CB3305
R296	315-0330-00			RES., FXD, CMPSN:33 OHM, 5%, 0.25W	01121	CB3305
R300	321-0289-00			RES., FXD, FILM:10K OHM, 1%, 0.125W	75042	CEATO-1002F
R302	321-0289-07			RES., FXD, FILM:10K OHM, 0.1%, 0.125W	75042	CEAT9-1002B
R304	321-0289-00			RES., FXD, FILM:10K OHM, 1%, 0.125W	75042	CEATO-1002F
R306	321-0281-07			RES., FXD, FILM:8.25K OHM, 0.10%, 0.125W	75042	CEAT9-8251B
R308	321-1602-04			RES., FXD, FILM:29.27K OHM, 0.1%, 0.125W	91637	MFF186D29271B
R310	321-0289-00			RES., FXD, FILM:10K OHM, 1%, 0.125W	75042	CEATO-1002F
R312	321-0603-07			RES., FXD, FILM:15K OHM, 0.1%, 0.125W	75042	CEAT9-1502B
R313	321-0292-00			RES., FXD, FILM:10.7K OHM, 1%, 0.125W	75042	CEATO-1072F
R314	321-0318-00			RES., FXD, FILM:20K OHM, 1%, 0.125W	75042	CEATO-2002F
R316	321-0318-00			RES., FXD, FILM:20K OHM, 1%, 0.125W	75042	CEATO-2002F
R324	315-0332-00			RES., FXD, CMPSN:3.3K OHM, 5%, 0.25W	01121	CB3325
R325	311-1268-00			RES., VAR, NONWIR:10K OHM, 10%, 0.50W	73138	62PT-351-0
R326	315-0101-00			RES., FXD, CMPSN:100 OHM, 5%, 0.25W	01121	CB1015
R328	315-0332-00			RES., FXD, CMPSN:3.3K OHM, 5%, 0.25W	01121	CB3325
R330	321-0097-00			RES., FXD, FILM:100 OHM, 1%, 0.125W	75042	CEATO-100OF
R331	321-0447-00			RES., FXD, FILM:442K OHM, 1%, 0.125W	75042	CEATO-4423F
R332	321-0232-00			RES., FXD, FILM:2.55K OHM, 1%, 0.125W	75042	CEATO-2551F
R334	321-0288-00			RES., FXD, FILM:9.76K OHM, 1%, 0.125W	75042	CEATO-9761F
R338	315-0101-00			RES., FXD, CMPSN:100 OHM, 5%, 0.25W	01121	CB1015
R342	315-0332-00			RES., FXD, CMPSN:3.3K OHM, 5%, 0.25W	01121	CB3325
R344	315-0101-00			RES., FXD, CMPSN:100 OHM, 5%, 0.25W	01121	CB1015

Ckt No.	Tektronix Part No	Serial/Model No. Eff	Dscont	Name & Description	Mfr Code	Mfr Part Number
R272	321-0399-00			RES., FXD, FILM:140K OHM, 1%, 0.125W	91637	MFF1816G14002F
R273	316-0565-00			RES., FXD, CMPSN:5.6M OHM, 10%, 0.25W	01121	CB5651
R274	315-0201-00			RES., FXD, CMPSN:200 OHM, 5%, 0.25W	01121	CB2015
R275	315-0270-00			RES., FXD, CMPSN:27 OHM, 5%, 0.25W	01121	CB2705
R276	321-0241-U0			RES., FXD, FILM:3.16K OHM, 1%, 0.125W	91637	MFF1816G31600F
R277	321-0241-00			RES., FXD, FILM:3.16K OHM, 1%, 0.125W	91637	MFF1816G31600F
R278	315-0220-00			RES., FXD, CMPSN:22 OHM, 5%, 0.25W	01121	CB2205
R279	315-0510-00			RES., FXD, CMPSN:51 OHM, 5%, 0.25W	01121	CB5105
R280	321-^327-03			RES., FXD, FILM:24.9K OHM, 0.25%, 0.125W	91637	MFF1816D24901C
R282	321-0310-00			RES., FXD, FILM:16.5K OHM, 1%, 0.125W	91637	MFF1816G16501F
R284	321-0748-06	B010100	B030528	RES., FXD, FILM:4.95K OHM, (NOM VALUE) , SEL	91637	MFF1816C49500C
R284	321-0764-01	B030529		RES., FXD, FILM:5.09K OHM, 0.5%, 0.125W	91637	MFF1816G50900D
R286	321-0318-07			RES., FXD, FILM:20K CHM, 0.1%, 0.125W	91637	MFF1816C20001B
R287	321-0620-00			RES., FXD, FILM:8.45K OHM, 0.25%, 0.125W	91637	MFF1816D84500C
R288	321-0631-03			RES., FXD, FILM:12.5K OHM, 0.25W, 0.125W	91637	MFF1816D12501C
R290	315-0330-00			RES., FXD, CMPSN:33 OHM, 5%, 0.25W	01121	CB3305
R292	315-0330-00			RES., FXD, CMPSN:33 OHM, 5%, 0.25W	01121	CB3305
R294	315-0330-00			RES., FXD, CMPSN:33 OHM, 5%, 0.25W	01121	CB3305
R296	315-0330-00			RES., FXD, CMPSN:33 OHM, 5%, 0.25W	01121	CB3305
R300	321-0289-00			RES., FXD, FILM:10K OHM, 1%, 0.125W	91637	MFF1816G10001F
R302	321-0289-07			RES., FXD, FILM:1OK OHM, 0.1%, 0.125W	91637	MFF1816C10001B
R304	321-0289-00			RES., FXD, FILM:1OK OHM, 1%, 0.125W	91637	MFF1816G10001F
R306	321-0281-07			RES., FXD, FILM:8.25K OHM, 0.10%, 0.125W	91637	MFF1816C82500B
R308	321-1602-04			RES., FXD, FILM:29.27K OHM, 0.1t, 0.125W	91637	MFF1816D29271B
R310	321-0289-00			RES., FXD, FILM:10K OHM, 1%, 0.125W	91637	MFF1816G10001F
R312	321-0603-07			RES., FXD, FILM:15K OHM, 0.1%, 0.125W	91637	MFF1816C15001B
R313	321-0292-00			RES., FXD, FILM:10.7K OHM, 1%, 0.125W	91637	MFF1816G10701F
R314	321-0318-00			RES., FXD, FILM:20K OHM, 1%, 0.125W	91637	MFF1816G20001F
R316	321-0318-00			RES., FXD, FILM:20K OHM, 1%, 0.125SW	91637	MFF1816G20001F
R324	315-0332-00			RES., FXD, CMPSN:3.3K OHM, 5%, 0.25W	01121	CB3325
R325	311-1268-00			RES., VAR, NONWIR:10K OHM, 10%, 0.50W	32997	3329P-L58-103
R326	315-0101-00			RES., FXD, CMPSN:100 OHM, 5%, 0.25W	01121	CB1015
R328	315-0332-00			RES., FXD, CMPSN:3.3K OHM, 5%, 0.25W	01121	CB3325
R330	321-0097-00			RES., FXD, FILM:100 OHM, 1%, 0.125W	91637	MFF1816G100ROF
R331	321-0447-00			RES., FXD, FILM:442K OHM, 1%, 0.125W	91637	MFF1816G44202F
R332	321-0232-00			RES., FXD, FILM:2.55K OHM, 1%, 0.125W	91637	MFF1816G25500F
R334	321-0288-00			RES., FXD, FILM:9.76K OHM, 1%, 0.125W	91637	MFF1816G97600F
R338	315-0101-00			RES., FXD, CMPSN:100 OHM, 5%, 0.25W	01121	CB1015
R342	315-0332-00			RES., FXD, CMPSN:3.3K OHM, 5%, 0.25W	01121	CB3325
R344	315-0101-00			RES., FXD, CMPSN:100 OHM, 5%, 0.25W	01121	CB1015
R345	311-1268-00			RES., VAR, NONWIR:1OK OHM, 10%, 0.50W	32997	3329P-L58-103
R346	315-0332-00			RES., FXD, CMPSN:3.3K OHM, 5%, 0.25W	01121	CB3325
R348	315-0101-00			RES., FXD, CMPSN:100 OHM, 5%, 0.25W	01121	CB1015
R350	315-0101-00			RES., FXD, CMPSN:100 OHM1, 5, 0.25W	01121	CB1015
R354	315-0101-00			RES., FXD, CMPSN:100 OHM, 5%, 0.25W	01121	CB1015
R365	311-1263-00			RES., VAR, NONWIR:1K OHM, 10%, 0.50W	32997	3329P-L58-102
R366	321-0161-00			RES., FXD, FILM:464 OHM, 1%, 0.125W	91637	MFF1816G464ROF
R370	321-0293-00			RES., FXD, FILM:11K OHM, 1%, 0.125W	91637	MFF1816G11001F
R372	321-0253-00			RES., FXD, FILM:4.22K OHM, 1%, 0.125W	91637	MFF1816G42200F
R374	315-0101-00			RES., FXD, CMPSN:100 OHM, 5%, 0.25W	01121	CB1015
R382	307-0103-00			RES., FXD, CMPSN:2.7 H014, 5%, 0.25W	01121	CB27G5
R384	315-0100-00			RES., FXD, CMPSN:10 OHM, 5%, 0.25W	01121	CB1005
R386	321-0190-00			RES., FXD, FILM:931 OHM, 1%, 0.125W	91637	MFF1816G931ROF

Ckt No.	Tektronix Part No	Serial/Model No. Eff	Dscont	Name & Description	Mfr Code	Mfr Part Number
R589	315-0224-00			RES., FXD, CMPSN:220K OHM, 5%, 0.25W	01121	CB2245
R590	315-0913-00			RES., FXD, CMPSN:91K OHM, 5%, 0.25W	01121	CB9135
R591	315-0163-00			RES., FXD, CMPSN:16K OHM, 5%, 0.25W	01121	CB1635
R592	315-0163-00			RES., FXD, CMPSN:16K OHM, 5%, 0.25W	01121	CB1635
R593	315-0333-00			RES., FXD, CHPSN:33K OHM, 5%, 0.25W	01121	CB3335
R594	321-0355-00			RES., FXD, FILM:48.7K OHM, 1%, 0.125W	75042	CEATO-4872F
R596	321-0289-00			RES., FXD, FILM:10K OHM, 1%, 0.125W	75042	CEATO-1002F
R598	315-0183-00			RES., FXD, CMPSN:18K OHM, 5%, 0.25W	01121	CB1835
R600	321-0399-00			RES., FXD, FILM:140K OHM, 1%, 0.125W	75042	CEATO-1403F
R602	315-0681-00			RES., FXD, CMPSN:680 OHM, 5%, 0.25W	01121	CB6815
R604	315-0105-00			RES., PXD, CMPSN:IM OHM, 5%, 0.25W	01121	CB1055
R606	321-0226-00			RES., FXD, FILM:2.21K OHM, 1%, 0.125W	75042	CEATO-2211F
R608	321-0222-00			RES., FXD, FILM:2K OHM, 1%, 0.125W	75042	CEATO-2001F
R610	315-0513-00			RES., FXD, CMPSN:51K OHM, 5%, 0.25W	01121	CB5135
R612	315-0112-00			RES., FXD, CMPSN:1.1K OHM, 5%, 0.25W	01121	CB1125
R614	315-0622-00			RES., FXD, CMPSN:6.2K OHM, 5%, 0.25W	01121	CB6225
R616	315-0222-00			RES., FXD, CMPSN:2.2K OHM, 5%, 0.25W	01121	CB2225
R618	321-0337-00			RES., FXD, FILM:31.6K OHM, 1%, 0.125W	75042	CEATO-3162F
R620	315-0103-00			RES., FXD, CMPSN:10OK OHM, 5%, 0.25W	01121	CB1035
R621	315-0106-00			RES., FXD, CMPSN:1OM OHM, 5%, 0.25W	01121	CB1065
R622	315-0101-00			RES., FXD, CMPSN:100 OHM, 5%, 0.25W	01121	CB1015
R623	315-0103-00			RES., FXD, CMPSN:10K OHM, 5%, 0.25W	01121	CB1035
R624	315-0511-00			RES., FXD, CMPSN:510 OHM, 5%, 0.25W	01121	CB5115
R626	321-0356-00			RES., FXD, FILM:49.9K OHM, 1%, 0.125W	75042	CEATO-4992F
R628	321-0385-00			RES., FXD, FILM:100K OHM, 1%, 0.125W	75042	CEATO-1003F
R629	315-0821-00			RES., FXD, CMPSN:820 OHM, 5%, 0.25W	01121	CB8215
R630	315-0752-00			RES., FXD, CMPSN:7.5K OHM, 5%, 0.25W	01121	CB7525
R632	321-0289-00			RES., FXD, FILM:OK OHM, 1%, 0.125W	75042	CEATO-1002F
R634	321-0289-00			RES., FXD, FILM:10K OHM, 1%, 0.125W	75042	CEATO-1002F
R636	321-0304-00			RES., FXD, FILM:14.3K OHM, %1, 0.125W	75042	CEATO-1432F
R638	315-0622-00			RES., FXD, CMPSN:6.2K OHM, 5%, 0.25W	01121	CB6225
R640	315-0153-00			RES., FXD, CMPSN:15K OHM, 5%, 0.25W	01121	CB1535
R642	315-0222-00			RES., FXD, CMPSN:2.2K OHM, 5%, 0.25W	01121	CB2225
R644	315-0821-00			RES., FXD, CMPSN:820 OHM, 5%, 0.25W	01121	CB8215
R646	315-0821-00			RES., FXD, CMPSN:820 OHM, 5%, 0.25W	01121	CB8215
R648	315-0270-00			RES., FXD, CMPSN:27 OHM, 5%, 0.25W	01121	CB2705
R650	321-0385-00			RES., FXD, FILM:100K OHM, 1%, 0.125W	75042	CEATO-1003F
R652	321-0385-00			RES., FXD, FILM:100K OHM, I%, 0.125W	75042	CEATO-1003F
R654	321-0254-00			RES., FXD, FILM:4.32K OHM, 1%, 0.125W	75042	CEATO-4321F
R655	311-1268-00			RES., VAR, NONWIR:10K OHM, 10%, 0.50W	73138	62PT-351-0
R656	321-0283-00			RES., FXD, FIIL:8.66K OHM, 1%, 0.125W	75042	CEATO-8661F
R660	307-1039-00			RES., FXD, FILM:ATTEN, 1K OHM	80009	307-1039-00
R661	321-0285-00			RES., FXD, FILM:9.09K OHM, 1%, 0.125W	75042	CEATO-9091F
R662	321-0291-00			RES., FXD, FILM:10.5K OHM, 1%, 0.125W	75042	CEATO-1052F
R666	321-0337-00			RES., FXD, FILI:31.6K OHM, 1%, 0.125W	75042	CEATO-3162F
R667	321-0337-00			RES., FXD, FILM:31.6K OHM, 1%, 0.125W	75042	CEATO-3162F
R668	321-0632-00			RES., FXD, FILM:9.41K OHM, 0.5%, 0.125W	75042	CEAT2-9411C
R670	321-1643-07			RES., FXD, FILM:11.03K OHM, 1%, 0.125W	91637	MFF1816C11031B
R672	321-1643-07			RES., FXD, FIILM:11.03K OHM, 1%, 0.125W	91637	MFF1816C11031B
R674	315-0106-00			RES., FXD, CMPSN:1OM OHM, 5%, 0.25W	01121	CB1065
R676	315-0103-00			RES., FXD, CMPSN:1OK OHM, 5%, 0.25W	01121	CB1035
R678	321-0260-00			RES., FXD, FILM:4.99K OHM, 1%, 0.125W	75042	CEATO-4991F
R680	321-0402-00			RES., FXD, FILM:150K OHM, 1%, 0.125W	75042	CEATO-1503F

Ckt No.	Tektronix Part No	Serial/Model No. Eff	Dscont	Name & Description	Mfr Code	Mfr Part Number
R608	321-0222-00			RES., FXD, FILM:2K OHM, 1%, 0.125W	91637	MFF1816G20000F
R610	315-0513-00			RES., FXD, CMPSN:51K OHM, 5%, 0.25W	01121	CB5135
R612	315-0112-00			RES., FXD, CMPSN:l.1K OHM, 5%, 0.25W	01121	CB1125
R614	315-0622-00			RES., FXD, CMPSN:6.2K OHM, 5%, 0.25W	01121	CB6225
R616	315-0222-00			RES., FXD, CMPSN:2.2K 08M, 5%, 0.25W	01121	CB2225
R618	321-0337-00			RES., FXD, FILM:31.6K OHM, 1%, 0.125W	91637	MFF1816G31601F
R620	315-0103-00			RES., FXD, CMPSN:10OK OHM, 5%, 0.25W	01121	CB1035
R621	315-0106-00			RES., FXD, CMPSN:10M OHM, 5%, O.25W	01121	CB1065
R622	315-0101-00			RES., FXD, CMPSN:100 OHM, 5%, 0.25W	01121	CB1015
R623	315-0103-00			RES., FXD, CMPSN:10K OHM, 5%, 0.25W	01121	CB1035
R624	315-0511-00			RES., FXD, CMPSN:510 OHM, 5%, 0.25W	01121	CB5115
R626	321-0356-00			RES., FXD, FIWI:49.9K OHM, 1%, 0.125W	91637	MFF1816G49901F
R628	321-0385-00			RES., FXD, FILM:100K OHM, 1%, 0.125W	91637	MFF1816G10002F
R629	315-0821-00			RES., FXD, CMPSN:820 OHM, 5%, 0.25W	01121	CB8215
R630	315-0752-00			RES., FXD, CMPSN:7.5K OHM, 5%, 0.25W	01121	CB7525
R632	321-0289-00			RES., FXD, FILM:1OK OHM, 1%, 0.125W	91637	MFF1816GlOOO1F
R634	321-0289-00			RES., FXD, FILM:1OK OHM, 1%, 0.125W	91637	MFF1816G10OOlF
R636	321-0304-00			RES., FXD, FILM:14.3K OHM, 1%, 0.125W	91637	MFF1816G14301F
R638	315-0622-00			RES., FXD, CMPSN:6.2K OHM, 5%, 0.25W	01121	CB6225
R640	315-0153-00			RES., FXD, CMPSN:15K OHM, 5%, 0.25W	01121	CB1535
R642	315-0222-00			RES., FXD, CMPSN:2.2K OHM, 5%, 0.25W	01121	CB2225
R644	315-0821-00			RES., FXD, CMPSN.:820 OHM, 5%, 0.25W	01121	CB8215
R646	315-0821-00			RES., FXD, CMPSN:820 OHM, 5%, 0.25W	01121	CB8215
R648	315-0270-00			RES., FXD, CMPSN:27 OHM, 5%, 0.25W	01121	CB2705
R650	321-0385-00			RES., FXD, FILM:100K OHM, 1%, 0.125W	91637	MFF1816G10002F
R652	321-0385-00			RES., FXD, FILM:100K OHM, 1%, 0.125W	91637	MFF1816G10002F
R654	321-0254-00			RES., FXD, FIIM:4.32K OHM, 1%, 0.125W	91637	MFF1816G43200F
R655	311-1268-00			RES., VAR, NONWIR:10K OHM, 10%, 0.50W	32997	3329P-L58-103
R656	321-0283-00			RES., FXD, FILM:8.66K OHM, 1%, 0.125W	91637	MFF1816G86600F
R660	307-1039-00			RES., FXD, FILM:ATTEN, 1K OHM	80009	307-1039-00
R661	321-0285-00			RES., FXD, FILM:9.09K OHM, 1%, 0.125W	91637	MFF1816G90900F
R662	321-0291-00			RES., FXD, FILM:10.5K OHM, 1%, 0.125W	91637	MFF1816G10501F
R666	321-0337-00			RES., FXD, FILM:31.6K OHM, 1%, 0.125W	91637	MFF1816G31601F
R667	321-0337-00			RES., FXD, FILM:31.6K OHM, 1%, 0.125W	91637	MFF1816G31601F
R668	321-0632-00			RES., FXD, FILM:9.41K OHM, 0.5%, 0.125N	91637	MFF1816D94100C
R670	321-1643-07			RES., FXD, FILM:11.03K OHM, 0.1%, 0.125W	91637	MFF1816C11031B
R672	321-1643-07			RES., FXD, FIIM:11.03K OHM, 0.1%, 0.125W	91637	MFF1816C11031B
R674	315-0106-00			RES., FXD, CMPSN:10M OHM, 5%, 0.25W	01121	CB1065
R676	315-0103-00			RES., FXD, CMPSN:10K OHM, 5%, 0.25W	01121	CB1035
R678	321-0260-00			RES., FXD, FILM:4.99K OHM, 1%, 0.125W	916J7	MFF1816G49900F
R680	321-0402-00			RES., FXD, FII:150K OHM, 1%, 0.125W	91637	MFF1816G15002F
R682	321-0356-00			RES., FXD, FILM:49.9K OHM, 1%, 0.125W	91637	MFF1816G49901F
R684	321-0349-00			RES., FXD, FILM:42.2K OHM, 1%, 0.125W	91637	MFF1816G42201F
R685	311-1266-00			RES., VAR, NONWIR:2.5K OHM, 10%, 0.50W	32997	3329P-L58-252
R686	321-0349-00			RES., FXD, FILM:42.2K OHM, 1%, 0.125W	91637	MFF1816G42201F
R688	321-0291-00			RES., FXD, FILM:10.5K OHM, 1%, 0.125W	91637	MFF1816G10501F
R690	315-0475-00			RES., FXD, CMPSN:4.7M OHM, 5%, 0.25W	01121	CB4755
R692	321-0289-00			RES., FXD, FILM:10K OHM, 1%, 0.125W	91637	MFF1816G1000llF
R694	321-0327-00			RES., FXD, FILM:24.9K OHM, 1%, 0.125W	91637	MFF1816G24901F
R696	321-0385-00			RES., FXD, FILM:100K OHM, 1%, 0.125W	91637	MFF1816G10002F
R698	321-0423-00			RES., FXD, FILM:249K OHM, 1%, 0.125W	91637	MFF1816G24902F
R700	321-0481-00			RES., FXD, FILM:1M OHM, 1%, 0.125W	91637	MFF1816G10003F
R702	322-0519-01			RES., FXD, FILM:2.49M OHM, 0.5%, 0.25W	91637	HFF143G24903D

Ckt No.	Tektronix Part No	Serial/Model No. Eff	Dscont	Name & Description	Mfr Code	Mfr Part Number
R784	315-0101-00			RES., FXD, CMPSN:100 OHM, 5%, 0.25W	01121	CB1015
R786	307-0106-00			RES., FXD, CMPSN:4.7 OHM, 5%, 0.25W	01121	CB47G5
R788	307-0106-00			RES., FXD, CMPSN:4.7 OHM, 5%, 0.25W	01121	CB47G5
R790	321-0767-03			RES., FXD, FILM:38.02K OHM, 0.25%, 0.125W	75042	CEAT2-38021C
R792	315-0104-00			RES., FXD, CMPSN:100K OHM, 5%, 0.25W	01121	CB1045
R794	315-0104-00			RES., FXD, CMPSN:100K OHM, 5%, 0.25W	01121	CB1045
R796	315-0104-00			RES., FXD, CMPSN:100K OHM, 5%, 0.25W	01121	CB1045
R798	321-0344-00			RES., FXD, FILM:37.4K OHM, 1%, 0.125W	75042	CEATO-3742F
ROO	321-0335-00			RES., FXD, FILM:30.1K OHM, 1%, 0.125W	75042	CEATO-3012F
R801	315-0331-00			RES., FXD, CMPSN:330 OHM, 5%, 0.25W	01121	CB3315
R802	321-0344-00			RES., FXD, FILM:37.4K OHM, 1%, 0.125W	75042	CEATO-3742F
R804	321-0327-00			RES., FXD, FILM:24.9K OHM, 1%, 0.125W	75042	CEATO-2492F
R806	321-0356-00			RES., FXD, FILM:49.9K OHM, 1%, 0.125W	75042	CEATO-4992F
R808	321-0344-00			RES., FXD, FILM:37.4K OHM, 1%, 0.125W	75042	CEATO-3742F
R810	321-0335-00			RES., FXD, FILM:30.1K OHM, 1%, 0.125W	75042	CEATO-3012F
R812	321-0327-00			RES., FXD, FILM:24.9K OHM, 1%, 0.125W	75042	CEATO-2492F
R814	321-0373-00			RES., FXD, FILM:75K OHM, 1%, 0.125W	75042	CEATO-7502F
R818	321-0356-00			RES., FXD, FILM:49.9K OHM, 1%, 0.125W	75042	CEATO-4992F
R820	321-0344-00			RES., FXD, FILM:37.4K OHM, 1%, 0.125W	75042	CEATO-3742F
R822	321-0335-00			RES., FXD, FILM:30.1K OHM, 1%, 0.125W	75042	CEATO-3012F
R834	315-0101-00			RES., FXD, CMPSN:100 OHM, 5%, 0.25W	01121	CB1015
R836	315-0102-00			RES., FXD, CMPSN:1K OHM, 5%, 0.25W	01121	CB1025
R837	315-0103-00			RES., FXD, CMPSN:10K OHM, 5%, 0.25W	01121	CB1035
R838	303-0392-00			RES., FXD, CMPSN:3.9K OHM, 5%, 1W	01121	GB3925
R839	315-0163-00			RES., FXD, CMPSN:16K OHM, 5%, 0.25W	01121	CB1635
R840	307-0446-00			RES., FXD, FILM:PACK 10K OHM	91637	CSPO8E10LM7
R841	315-0105-00			RES., FXD, CMPSN:1M OHM, 5%, 0.25W	01121	CB1055
R842	315-0163-00			RES., FXD, CMPSN:16K OHM, 5%, 0.25W	01121	CB1635
R843	315-0472-00			RES., FXD, CMPSN:4.7K OHM, 5%, 0.25W	01121	CB4725
R844	321-0402-00			RES., FXD, FILM:150K OHM, 1%, 0.125W	75042	CEATO-1503F
R845	307-0446-00			RES., FXD, FILM:PACK 10K OHM	91637	CSP08E101M7
R846	321-0356-00			RES., FXD, FILM:49.9K OHM, 1%, 0.125W	75042	CEATO-4992F
R848	321-0373-00			RES., FXD, FILM:75K OHM, 1%, 0.125W	75042	CEATO-7502F
R850	307-0446-00			RES., FXD, FILM:PACK 10K OHM	91637	CSP08E101M7
R851	321-0344-00			RES., FXD, FILM:37.4K OHM, 1%, 0.125W	75042	CEATO-3742F
R852	315-0513-00			RES., FXD, CMPSN:51K OHM, 5%, 0.25W	01121	CB5135
R862	315-0472-00			RES., FXD, CMPSN:4.7K OHM, 5%, 0.25W	01121	CB4725
R864	315-0471-00			RES., FXD, CMPSN:470 OHM, 5%, 0.25W	01121	CB4715
R868	321-0442-00			RES., FXD, FILM:392K OHM, 1%, 0.125W	75042	CEATO-3923F
R870	321-0425-00			RES., FXD, FILM:261K OHM, 1%, 0.125W	75042	CEATO-2613F
R874	321-0385-00			RES., FXD, FILM:100K OHM, 1%, 0.125W	75042	CEATO-1003F
R876	321-0426-00			RES., FXD, FILM:267K OHM, 1%, 0.125W	75042	CEATO-2673F
R878	321-0377-00			RES., FXD, FILM:82.5K OHM, 1%, 0.125W	75042	CEATO-8252F
R880	307-0106-00			RES., FXD, CMPSN:4.7 OHM, 5%, 0.25W	01121	CB47G5
R882	307-0106-00			RES., FXD, CMPSN:4.7 OHM, 5%, 0.25W	01121	CB47G5
R891	301-0562-00			RES., FXD, CMPSN:5.6K OHM, 5%, 0.50W	01121	EB5625
R892	311-1280-00			RES., VAR, NONWIR:1K OHM, 10%, 0.5W	73138	62PAS-323-0
R893	321-0915-07			RES., FXD, FILM:1.291K OHM, 0.1%, 0.125W	75042	CEAT9-12910B
R894	321-0816-07			RES., FXD, FIILM:K OHM, 0.1%, 0.125W	75042	CEAT9-5001B
R895	311-1280-00			RES., VAR, NONWIR:1K OHM, 10%, 0.5W	73138	62PAS-323-0
R896	315-0101-00			RES., FXD, CMPSN:100 OHM, 5%, 0.25W	01121	CB1015
R897	321-0815-07			RES., FXD, FILM:4.1K OHM, 0.1%, 0.125W	75042	CEAT9-4101B
R898	321-0249-09			RES., FXD, FILM:3.83K OHM, 1%, 0.125W		

Ckt No.	Tektronix Part No	Serial/Model No. Eff	Dscont	Name & Description	Mfr Code	Mfr Part Number
R806	321-0356-00			RES., FXD, FILM:49.9K OHM, 1%, 0.125W	91637	MFF1816G49901F
R808O	321-0344-00			RES., FXD, FILM:37.4K OHM, 1%, 0.125W	91637	MFF1816G37401F
R810	321-0335-00			RES., FXD, FILM:30.1K OHM, 1%, 0.125W	91637	MFF1816G30101F
R812	321-0327-00			RES., FXD, FILM:24.9K OHM, 1%, 0.125W	91637	MFF1816G24901F
R814	321-0373-00			RES., FXD, FILM:75K OHM, 1%, 0.125W	91637	MFF1816G75001F
R818	321-0356-00			RES., FXD, FILM:49.9K OHM, 1%, 0.125W	91637	MFF1816G49901F
R820	321-0344-00			RES., FXD, FIIM:37.4K OHM, 1%, 0.125W	91637	MFF1816G37401F
R822	321-0335-00			RES., FXD, FILM:30.1K OHM, 1%, 0.125W	91637	MFF1816G30101F
R834	315-0101-00			RES., FXD, CMPSN:100 OHM, 5%, 0.25W	01121	CB1015
R836	315-0102-00			RES., FXD, CMPSN:1K OHM, 5%, 0.25W	01121	CB1025
R837	315-0103-00			RES., FXD, CMPSN:10K OHM, 5%, 0.25W	01121	CB1035
R838	303-0392-00			RES., FXD, CMPSN:3.9K OHM, 5%, 1W	01121	GB3925
R839	315-0163-00			RES., FXD, CMPSN:16K OHM, 5%, 0.25W	01121	CB1635
R840	307-0446-00			RES, NTWK, FXD FI:10K OHM, 20%, (9) RES	03888	A3HT08
R841	315-0105-00			RES., FXD, CMPSN:1M OHM, 5%, 0.25W	01121	CB1055
R842	315-0163-00			RES., FXD, CMPSN:16K OHM, 5%, 0.25W	01121	CB1635
R843	315-0472-00			RES., FXD, CMPSN:4.7K OHM, 5%, 0.25W	01121	CB4725
R844	321-0402-00			RES., FXD, FILM:150K OHM, 1%, 0.125W	91637	MFF1816G15002F
R845	307-0446-00			RES, NTWK, FXD FI:10K OHM, 20%, (9) RES	03888	A3HT08
R846	321-0356-00			RES., FXD, FILM:49.9K OHM, 1%, 0.125W	91637	MFF1816G49901F
R848	321-0373-00			RES., FXD, FILM:75K OHM, 1%, 0.125W	91637	MFF1816G75001F
R850	307-0446-00			RES, NTWK, FXD FI:1OK OHM, 20%, (9) RES	03888	A3HT08
R851	321-0344-00			RES., FXD, FILM:37.4K OHM, 1%, 0.125W	91637	MFF1816G37401F
R852	315-0513-00			RES., FXD, CMPSN:51K OHM, 5%, 0.25W	01121	CB5135
R862	315-0472-00			RES., FXD, CMPSN:4.7K OHM, 5%, 0.25W	01121	CB4725
R864	315-0471-00			RES., FXD, CMPSN:470 OHM, 5%, 0.25W	01121	CB4715
R868	321-0442-00			RES., FXD, FILM:392K OHM, 1%, 0.125W	91637	MFF1816G39202F
R870	321-0425-00			RES., FXD, FIIM:261K OHM, 1%, 0.125W	91637	MFF1816G26102F
R874	321-0385-00			RES., FXD, FILM:100K OHM, 1%, 0.125W	91637	MFF1816G10002F
R876	321-0426-00			RES., FXD, FILM:267K OHM, 1%, 0.125W	91637	MFF1816G26702F
R878	321-0377-00			RES., FXD, FILM:82.5K OM, 1%, 0.125W	91637	MFF1816G82501F
R880	307-0106-00			RES., FXD, CMPSN:4.7 OHM, 5%, 0.25W	01121	CB47G5
R882	307-0106-00			RES., FXD, CMPSN:4.7 0HM, 5%, 0.25W	01121	CB47G5
R891	301-0562-00			RES., FXD, CMPSN:5.6K OHM, 5%, 0.50W	01121	EB5625
R892	311-1280-00			RES., VAR, NONWIR:l1K OHM, 10%, 0.50W	32997	3329W-L58-102
R893	321-0915-07			RES., FXD, FILM:1.291K OHM, 0.1%, 0.125W	75042	CEAT9-12910B
R894	321-0816-07			RES., FXD, FILM:5K OHM, 0.1%, 0.125W	91637	MFF1816CS0000B
R895	311-1280-00			RES., VAR, NONWIR:1K OHM, 10%, 0.50W	32997	3329W-L58-102
1896	315-0101-00			RES., FXD, CMPSN:100 ORM, 5%, 0.25W	01121	CB1015
R897	321-0815-07			RES., FXD, FILM:4.1K OHM, 0.1%, 0.125W	91637	MFF1816C41000B
R898	321-0249-09			RES., FXD, DFILM:3.83K OHM, 1%, 0.125W		
R1000	315-0104-00			RES., FXD, CMPSN:100K OHM, 5%, 0.25W	01121	CB1045
R1002	315-0273-00			RES., FXD, CMPSN:100K OHM, 5%, 0.25W	01121	CB1045
R1004	315-0302-00			RES., FXD, CMPSN:3K OHM, 5%, 0.25W	01121	CB3025
R1006	315-0104-00			RES., FXD, CMPSN:100K OHM, 5%, 0.25W	01121	CB1045
R1008	315-0104-00			RES., FXD, CMPSN:100K OHM, 5%, 0.25W	01121	CB1045
R1010	315-0104-00			RES., FXD, CMPSN:100K OHM, 5%, 0.25W	01121	CB1045
R1012	315-0104-00			RES., FXD, CMPSN:100K OHM, 5%, 0.25W	01121	CB1045
R1014	315-0104-00			RES., FXD, CMPSN:100K OHM, 5%, 0.25W	01121	CB1045
R1016	315-0104-00			RES , FXD, CMPSN:100K OHM, 5%, 0.25W	01121	CB1045
R1018	315-0104-00			RES , FXD, CMPSN:100K OHM, 5%, 0.25W	01121	CB1045
R1020	315-0103-00			RES , FXD, CMPSN:10K OHM, 5%, 0.25W	01121	CB1035

Ckt No.	Tektronix Part No	Serial/Model No. Eff	Dscont	Name & Description	Mfr Code	Mfr Part Number
R1200	315-0153-00			RES., FXD, CMPSN:15K OHM, 5%, 0.25W	01121	CB1535
R1204	315-0153-00			RES., FXD, CMPSN:15K OHM, 5%, 0.25W	01121	CB1535
R1214	315-0101-00			RES., FXD, CMPSN:100 OHM, 5%, 0.25W	01121	CB1015
R1216	315-0101-00			RES., FXD, CMPSN:100 OHM, 5%, 0.25W	01121	CB1015
R1220	321-0267-00			RES., FXD, FILM:5.9K OHM, 1%, 0.125W	75042	CEATO-5901F
R1224	321-0161-00			RES., FXD, FILM:464 OHM, 1%, 0.125W	75042	CEATO-4640F
R1226	315-0620-00			RES., FXD, CMPSN:62 OHM, 5%, 0.25W	01121	CB6205
R1230	315-0103-00			RES., FXD, CMPSN:10K OHM, 5%, 0.25W	01121	CB1035
R1232	315-0102-00			RES., FXD, CMPSN:1K OHM, 5%, 0.25W	01121	CB1025
R1234	315-0103-00			RES., FXD, CMPSN:10K OHM, 5%, 0.25W	01121	CB1035
R1236	315-0472-00			RES., PFXD, CMPSN:4.7K OHM, 5%, 0.25W	01121	CB4725
R1240	315-0222-00			RES., FXD, CMPSN:2.2K OHM, 5%, 0.25W	01121	CB2225
R1241	315-0103-00			RES., FXD, CMPSN:10K OHM, 5%, 0.25W	01121	CB1035
R1242	321-0155-00			RES., FXD, FILM:402 OHM, 1%, 0.125W	75042	CEATO-4020F
R1246	315-0302-00			RES., FXD, CMPSN:3K OHM, 5%, 0.25W	01121	CB3025
R1248	315-0101-00			RES., FXD, CMPSN:100 OHM, 5%, 0.25W	01121	CB1015
R1249	321-0260-00			RES., FXD, FILM:4.99K OHM, 1%, 0.125W	75042	CEATO-4991F
R1250	321-0155-00			RES., FXD, FILM:402 OHM, 1%, 0.125W	75042	CEATO-4020F
R1252	321-0251-00			RES., FXD, FILM:4.02K OHM, 1%, 0.125W	75042	CEATO-4021F
R1254	315-0102-00			RES., FXD, CMPSN:1K OHM, 5%, 0.25W	01121	CB1025
R1256	321-0193-00			RES., FXD, FILM:1K OHM, 1%, 0.125W	75042	CEATO-1001F
R1258	315-0203-00			RES., FXD, CMPSN:20K OHM, 5%, 0.25W	01121	CB2035
R1260	315-0203-00			RES., FXD, CMPSN:20K OHM, 5%, 0.25W	01121	CB2035
R1262	315-0102-00			RES., FXD, CMPSN:1K OHM, 5%, 0.25W	01121	CB1025
R1300	321-0068-00			RES., FXD, FILM:49.9 OHM, 1%, 0.125W	75042	CEATO-49R90F
R1304	307-0113-00			RES., FXD, CMPSN:5.1 OHM, 5%, 0.25W	01121	CB51G5
R1306	315-0182-00			RES., FXD, CMPSN:1.8K OHM, 5%, 0.25W	01121	CB1825
R1308	315-0510-00			RES., FXD, CMPSN:51 OHM, 5%, 0.25W	01121	CB5105
R1310	321-0246-00			RES., FXD, FIIM:3.57K OHM, 1%, 0.125W	75042	CEATO-3571F
R1312	315-0561-00			RES., FXD, CMPSN:560 OHH, 5%, 0.25W	01121	CB5615
R1314	315-0511-00			RES., FXD, CMPSN:510 OHM, 5%, 0.25W	01121	CB5115
R1316	315-0511-00			RES., FXD, CMPSN:510 OHN, 5%, 0.25W	01121	CB5115
R1318	321-0114-00			RES., FXD, FILM:150 OHM, 1%, 0.125W	75042	CEATO-1500F
R1320	315-0510-00			RES., FXD, CMPSN:51 OHM, 5%, 0.25W	01121	CB5105
R1322	321-0068-00			RES., FXD, FILN:49.9 OHM, 1%, 0.125W	75042	CEATO-49R90F
R1324	315-0510-00			RES., FXD, CHPSN:51 OHM, 5%, 0.25W	01121	CB5105
R1326	315-0620-00			RES., FXD, CMPSN:62 OHM, 5%, 0.25W	01121	CB6205
R1350	315-0470-00			RES., FXD, CMPSN:47 OHM, 5%, 0.25W	01121	CB4705
R1352	315-0303-00			RES., FXD, CMPSN:30K OHM, 5%, 0.25W	01121	CB3035
R1354	315-0470-00			RES., FXD, CMPSN:47 OHM, 5%, 0.25W	01121	CB4705
R1356	315-0303-00			RES., FXD, CMPSN:30K OHM, 5%, 0.25W	01121	CB3035
R1358	315-0101-00			RES., FXD, CMPSN:100 OHM, 5%, 0.25W	01121	CB1015
R1359	315-0101-00			RES., FXD, CMPSN:100 OHM, 5%, 0.25W	01121	CB1015
R1360	315-0203-00			RES., FXD, OMPSN:20K OHM, 5%, 0.25W	01121	CB2035
R1362	315-0103-00			RES., FXD, CMPSN:10K OHM, 5%, 0.25W	01121	CB1035
R1364	315-0302-00			RES., FXD, CMPSN:3K OHM, 5%, 0.25W	01121	CB3025
R1366	315-0152-00			RES., FXD, CMPSN:1.5K OHM, 5%, 0.25W	01121	CB1525
R1370	315-0203-00			RES., FXD, CMPSN:20K OHM, 5%, 0.25W	01121	CB2035
R1372	315-0103-00			RES., FXD, CMPSN:1OK OHM, 5%, 0.25W	01121	CB1035
R1374	315-0302-00			RES., FXD, CMPSN:3K OHM, 5%, 0.25W	01121	CB3025
R1376	315-0152-00			RES., FXD, CMPSN:1.5K OHM, 5%, 0.25W	01121	CB1525
R1380	315-0470-00			RES., FXD, WCPSN:47 OHM, 5%, 0.25W	01121	CB4705
R1384	315-0470-00			RES., FXD, CMPSN:47 OHM, 5%, 0.25W	01121	CB4705

Ckt No.	Tektronix Part No	Serial/Model No. Eff	Dscont	Name & Description	Mfr Code	Mfr Part Number
R1241	315-0103-00			RES., FXD, CMPSN:10K OHM, 5%, 0.25W	01121	CB1035
R1242	321-0155-00			RES., FXD, FILM:402 OHM, 1%, 0.125W	91637	MFF1816G402ROF
R1246	315-0302-00			RES., FXD, CMPSN:3K OHM, 5%, 0.25W	01121	CB3025
R1248	315-0101-00			RES., FXD, CMPSN:100 OHM, 5%, 0.25W	01121	CB1015
R1249	321-0260-00			RES., FXD, FILM:4.99K OHM, 1%, 0.125W	91637	MFF1816G49900F
R1250	321-0155-00			RES., FXD, FILM:402 OHM, 1%, 0.125W	91637	MFF1816G402ROF
R1252	321-0251-00			RES., FXD, FILM:4.02K OHM, 1%, 0.125W	91637	MFF1816G40200F
R1254	315-0102-00			RES., FXD, CMPSN:1K OHM, 5%, 0.25W	01121	CB1025
R1256	321-0193-00			RES., FXD, FILM:1K OHM, 1%, 0.125W	91637	MFF1816G10000F
R1258	315-0203-00			RES., FXD, CMPSN:20K OHM, 5%, 0.25W	01121	CB2035
R1260	315-0203-00			RES., FXD, CMPSN:20K OHM, 5%, 0.25W	01121	CB2035
R1262	315-0102-00			RES., FXD, CMPSN:1K OHM, 5%, 0.25W	01121	CB1025
R1300	321-0068-00			RES., FXD, FILM:49.9 OHM, 1%, 0.125W	91637	MFF1816G49R90F
, 1304	307-0113-00			RES., FXD, CMPSN:5.1 OHM, 5%, 0.25W	01121	CB51G5
R1306	315-0182-00			RES., FXD, CMPSN:1.8K OHM, 5%, 0.25W	01121	CB1825
R1308	315-0510-00			RES., FXD, CMPSN:51 OHM, 5%, 0.25W	01121	CB5105
R1310	321-0246-00			RES., FXD, FILM:3.57K OHM, 1%, 0.125W	91637	MFF1816G35700F
R1312	315-0561-00			RES., FXD, CMPSN:560 OHM, 5%, 0.25W	01121	CB5615
R1314	315-0511-00			RES., FXD, CMPSN:510 OHM, 5%, 0.25W	01121	CB5115
R1316	315-0511-00			RES., FXD, CMPSN:510 OHM, 5%, 0.25W	01121	CB5115
R1318	321-0114-00			RES., FXD, FILM:150 OHM, 1%, 0.125W	91637	MFF1816G150ROF
R1320	315-0510-00			RES., FXD, CMPSN:51 OHM, 5%, 0.25W	01121	CB5105
R1322	321-0068-00			RES., FXD, FILM:49.9 OHM, 1%, 0.125W	91637	MFF1816G49R9OF
R1324	315-0510-00			RES., FXD, CMPSN:51 OHM, 5%, 0.25W	01121	CB5105
R1326	315-0620-00			RES., FXD, CMPSN:62 OHM, 5%, 0.25W	01121	CB6205
R1350	315-0470-00			RES., FXD, CMPSN:47 OHM, 5%, 0.25W	01121	CB4705
R1352	315-0303-00			RES., FXD, CMPSN:30K OHM, 5%, 0.25W	01121	CB3035
R1354	315-0470-00			RES., FXD, CMPSN:47 OHM, 5%, 0.25W	01121	CB4705
R1356	315-0303-00			RES., FXD, CMPSN:30K OHM, 5%, 0.25W	01121	CB3035
R1358	315-0101-00			RES., FXD, CMPSN:100 OHM, 5%, 0.25W	01121	CB1015
R1359	315-0101-00			RES., FXD, CMPSN:100 OHM, 5%, 0.25W	01121	CB1015
R1360	315-0203-00			RES., FXD, CMPSN:20K OHM, 5%, 0.25W	01121	CB2035
R1362	315-0103-00			RES., FXD, CMPSN:10K OHM, 5%, 0.25W	01121	CB1035
R1364	315-0302-00			RES., FXD, CMPSN:3K OHM, 5%, 0.25W	01121	CB3025
R1366	315-0152-00			RES., FXD, CMPSN:1.5K OHM, 5%, 0.25W	01121	CB1525
R1370	315-0203-00			RES., FXD, CMPSN:20K OHM, 5%, 0.25W	01121	CB2035
R1372	315-0103-00			RES., FXD, CMPSN:10K OHM, 5%, 0.25W	01121	CB1035
R1374	315-0302-00			RES., FXD, CMPSN:3K OHM, 5%, 0.25W	01121	CB3025
R1376	315-0152-00			RES., FD, CMPSN:1.5K OHM, 5%, 0.25W	01121	CB1525
R1380	315-0470-00			RES., FXD, CMPSN:47 OHM, 5%, 0.25W	01121	CR4705
R1384	315-0470-00			RES., FXD, CMPSN:47 OHM, 5%, 0.25W	01121	CB4705
R1390	321-0263-00			RES., FXD, FILM:5.36K OHM, %1, 0.125W	91637	MFF1816G53600F
R1392	321-0255-00			RES., FXD, FILM:4.42K OHM, 1%, 0.125W	91637	MFF1816G44200F
R1394	321-0222-00			RES., FXD, FILM:2K ORM, 1%, 0.125W	91637	MFF1816G20000F
R1396	321-0130-00			RES., FXD, FILM:221 OHM, 1%, 0.125W	91637	MFF1816G221ROF
R1398	321-0216-00			RES., FXD, FILM:1.74K OHM, 1%, 0.125W	91637	MFF1816G17400F
R1400	321-0170-00			RES., FXD, FILM:576 OHM, 1%, 0.125W	91637	MFF1816G576ROF
R1402	315-0102-00			RES., FXD, CMPSN:1K OHM, 5%, 0.25W	01121	CB1025
R1404	315-0510-00			RES., FXD, CMPSN:51 OHM, 5%, 0.25W	01121	CB5105
R1406	321-0239-00			RES., FXD, FILM:3.01K OHM, 1%, 0.125W	91637	MFF1816G30100F
R1408	315-0301-00			RES., FXD, CKPSN:300 OHM, 5%, 0.25W	01121	CB3015
R1410	321-0404-00			RES., FXD, FILM:158K OHM, 1%, 0.125W	91637	MFF1816G15802F
R1411	321-0246-00			RES., FXD, FILM:3.57K OHM, 1%, 0.125W	91637	MFF1816G35700F

Ckt No.	Tektronix Part No	Serial/Model No. Eff	Dscont	Name & Description	Mfr Code	Mfr Part Number
R1520	317-0274-00			RES., FXD, CMPSN:270K OHM, 5%, 0.125W	01121	BB2745
R1522	317-0152-00			RES., FXD, CMPSN:1.5K OHM, 5%, 0.125W	01121	BB1525
R1524	317-0512-00			RES., FXD, CMPSN:5.1K OHM, 5%, 0.125	01121	BB5125
R1526	317-0301-00			RES., FXD, CMPSN:300 OHM, 5%, 0.125W	01121	BB3015
R1528	317-0102-00			RES., FXD, CMPSN:1K OHM, 5%, 0125W	01121	BB1025
R1529	317-0102-00			RES., FXD, CMPSN:1K OHM, 5%, 0125W	01121	BB1025
R1530	317-0303-00			RES., FXD, CMPSN:30K OHM, 5%, 0.125W	01121	BB3035
R1531	317-0103-00			RES., FXD, CMPSN:10K OHM, 5%, 0125W	01121	BB1035
R1532	317-0103-00			RES., FXD, CMPSN:10K OHM, 5%, 0125W	01121	BB1035
R1533	317-0101-00			RES., FXD, CMPSN:100 OHM, 5%, 0.125W	01121	BB1015
R1536	317-0564-00			RES., FXD, CMPSN:560K OHM, 5%, 0.125W	01121	BB5645
R1540	317-0103-00			RES., FXD, CMPSN.10K OHM, 5%, 0125W	01121	BB1035
R1544	317-0202-00			RES., FXD, CMPSN:2K OHM, 5%, 0.125W	01121	BB2025
R1612	321-0068-00			RES., FXD, FILM:49.9 OHM, 1%, 0.125W	75042	CEATO-49R90F
R1616	321-0068-00			RES., FXD, FILM:49.9 OHM, l%, 0.125W	75042	CEATO-49R90F
R1622	321-0068-00			RES., FXD, FILM:49.9 OHM, 1%, 0.125W	75042	CEATO-49R90P
R1626	321-0068-00			RES., FXD, FILM:49.9 OHM, 1%, 0.125W	75042	CEATO-49R90F
R1632	315-0510-00			RES., FXD, CMPSN:51 OHM, 5%, 0.25W	01121	CB5105
R1650	317-0470-00			RES., FXD, CMPSN:47 OHM, 5%, 0.125W	01121	BB4705
R1652	315-0203-00			RES., FXD, CMPSN:20K OHM, 5%, 0.25W	01121	CB2035
R1654	321-0193-00			RES., FXD, FILM:1K OHM, 1%, 0.125W	75042	CEATO-1001F
R1656	315-0240-00			RES., FXD, CMPSN:24 OHM, 5%, 0.25W	01121	CB2405
R1657	315-0101-00			RES., FXD, CMPSN:100 OHM, 5%, 0.25W	01121	CB1015
R1658	315-0183-00			RES., FXD, CMPSN:18K OHM, 5%, 0.25W	01121	CB1835
R1660	315-0302-00			RES., FXD, CMPSN:3K OHM, 5%, 0.25W	01121	CB3025
R1667	315-0105-00			RES., FXD, CMPSN:IM OHM, 5%, 0.25W	01121	CB1055
R1668	321-0260-00			RES., FXD, FILM:4.99K OHM, 1%, 0.125W	75042	CEATO-4991F
R1669	315-0105-00			RES., FXD, CMPSN:IM OHM, 5%, 0.25W	01121	CB1055
R1670	321-0193-00			RES., FXD, FILM:IK OHM, 1%, 0.125W	75042	CEATO-1001F
R1672	317-0470-00			RES., FXD, CMPSN:47 OHM, 5%, 0.125W	01121	BB4705
R1673	315-0222-00			RES., FXD, CMPSN:2.2K OHM, 5%, 0.25W	01121	CB2225
R1674	321-0256-00			RES., FXD, FILM:4.53K OHM, 1%, 0.125W	75042	CEATO-4531F
R1675	315-0273-00			RES., FXD, CMPSN:27K OHM, 5%, 0.25W	01121	CB2735
R1676	315-0912-00			RES., FXD, CMPSN:9.1K OHM, 5%, 0.25W	01121	CB9125
R1677	315-0272-00			RES., FXD, CMPSN:2.7K OHM, 5%, 0.25W	01121	CB2725
R1678	315-0301-00			RES., FXD, CMPSN:300 OHM, 5%, 0.25W	01121	CB3015
R1679	317-0301-00			RES., FXD, CMPSN:300 OHM, 5%, 0.125W	01121	BB3015
R1680	311-1263-00			RES., VAR, NONWIR:1K OHM, 10%, 0.50W	73138	62PT-347-0
R1681	315-0203-00			RES., FXD, CMPSN:20K OHM, 5%, 0.25W	01121	CB2035
R1682	321-0135-00			RES., FXD, FILM:249 OHM, 1%, 0.125W	75042	CEATO-2490F
R1683	321-0318-00			RES., FXD, FITLM:20K OHM, 1%, 0.125W	75042	CEATO-2002F
R1684	315-0153-00			RES., FXD, CMPSN:15K OHM, 5%, 0.25W	01121	CB1535
R1685	311-1259-00			RES., VAR, NONWIR:100 OHM, 10%, 0.50W	80294	3329P-L58-101
R1686	315-0203-00			RES., FXD, CMPSN:20K OHM, 5%, 0.25W	01121	CB2035
R1687	315-0113-00			RES., FXD, CMPSN:11K OHM, 5%, 0.25W	01121	CB1135
R1688	315-0203-00			RES., FXD, CMPSN:20K OHM, 5%, 0.25W	01121	CB2035
R1689	315-0203-00			RES., FXD, CMPSN:20K OHM, 5%, 0.25W	01121	CB2035
R1690	315-0473-00			RES., FXD, CMPSN:47K OHM, 5%, 0.25W	01121	CB4735
R1691	315-0153-00			RES., FXD, CMPSN:15K OHM, 5%, 0.25W	01121	CB1535
R1692	315-0153-00			RES., FXD, CMPSN:15K OHM, 5%, 0.25W	01121	CB1535
R1693	315-0393-00			RES., FXD, CMPSN:39K OHM, 5%, 0.25W	01121	CB3935
R1694	317-0203-00			RES., FXD, CMPSN:20K OHM, 5%, 0.125W	01121	BB2035
R1700	311-1273-00			RES., VAR, NONWIR:200K OHM, 10%, 0.5W	73138	62PT-356-0

Ckt No.	Tektronix Part No	Serial/Model No. Eff	Dscont	Name & Description	Mfr Code	Mfr Part Number
R1544	317-0202-00			RES., FXD, CMPSN:2K OHM, 5%, 0.125W	01121	BB2025
R1612	321-0068-00			RES., FXD, FILM:49.9 OHM, 1%, 0.125W	91637	MFF1816G49R90F
R1616	321-0068-00			RES., FXD, FILM:49.9 OHM, 1%, 0.125W	91637	MFF1816G49R90F
R1622	321-0068-00			RES., FXD, FILM:49.9 OHM, 1%, 0.125W	91637	MFF1816G49R90F
R1626	321-0068-00			RES., FXD, FILM:49.9 OHM, 1%, 0.125W	91637	MFF1816G49R90F
R1632	315-0510-00			RES., FXD, CMPSN:51 OHM, 5%, 0.25W	01121	CB5105
R1650	317-0470-00			RES., FXD, CMPSN:47 OHM, 5%, 0.125W	01121	BB4705
R1652	315-0203-00			RES., FXD, CMPSN:20K OHM, 5%, 0.25W	01121	CB2035
R1654	321-0193-00			RES., FXD, FILM:1K OHM, 1%, 0.125W	91637	MFF1816G10000F
R1656	315-0240-00			RES., FXD, CMPSN:24 OHM, 5%, 0.25W	01121	CB2405
R1657	315-0101-00			RES., FXD, CMPSN:100 OHM, 5%, 0.25W	01121	CB1015
R1658	315-0183-00			RES., FXD, CMPSN:18K OHM, 5%, 0.25W	01121	CB1835
R1660	315-0302-00			RES., FXD, CMPSN:3K OHM, 5%, 0.25W	01121	CB3025
R1667	315-0105-00			RES., FXD, CMPSN:1M OHM, 5%, 0.25W	01121	CB1055
R1668	321-0260-00			RES., FXD, FILM:4.99K OHM, 1%, 0.125W	91637	MFF1816G49900F
R1669	315-0105-00			RES., FXD, CMPSN:1M OHM, 5%, 0.25W	01121	CB1055
R1670	321-0193-00			RES., FXD, FILM:1K OHM, 1%, 0.125W	91637	MFF1816G10000F
R1672	317-0470-00			RES., FXD, CMPSN:47 OHM, 5%, 0.125W	01121	BB4705
R1673	315-0222-00			RES., FXD, CMPSN:2.2K OHM, 5%, 0.25W	01121	CB2225
R1674	321-025600			RES., FXD, FILM:4.53K OHM, 1%, 0.125W	91637	MFF1816G45300F
R1675	315-0273-00			RES., FXD, CMPSN:27K OHM, 5%, 0.25W	01121	CB2735
R1676	315-0912-00			RES., FXD, CMPSN:9.1K OHM, 5%, 0.25W	01121	CB9125
R1677	315-0272-00			RES., FXD, CMPSN:2.7K OHM, 5%, 0.25W	01121	CB2725
R1678	315-0301-00			RES., FXD, CMPSN:300 OHM, 5%, 0.25W	01121	CB3015
R1679	317-0301-00			RES., FXD, CMPSN:300 OHM, 5%, 0.125W	01121	BB3015
R1680	311-1263-00			RES., VAR, NONWIR:1K OH0, 10%, 0.50W	32997	3329P-L58-102
R1681	315-0203-00			RES., FXD, CMPSN:20K OHM, 5%, 0.25W	01121	CB2035
R1682	321-0135-00			RES., FXD, FILM:249 OHM, 1%, 0.125W	91637	MFF1816G249ROF
R1683	321-0318-00			RES., FXD, FILM:20K OHM, 1%, 0.125W	91637	MFF1816G20001F
R1684	315-0153-00			RES., FXD, CMPSN:15K OHM, 5%, 0.25W	01121	CB1535
R1685	311-1259-00			RES., VAR, NONWIR:100 OHM, 10%, 0.50W	32997	3329P-L58-101
R1686	315-0203-00			RES., FXD, CMPSN:20K OHM, 5%, 0.25W	01121	CB2035
R1687	315-0113-00			RES., FXD, CMPSN:11K OHM, 5%, 0.25W	01121	CB1135
R1688	315-0203-00			RES., FXD, CMPSN:20K OHM, 5%, 0.25W	01121	CB2035
R1689	315-0203-00			RES., FXD, CMPSN:20K OHM, 5%, 0.25W	01121	CB2035
R1690	315-0473-00			RES., FXD, CMPSN:47K OHM, 5%, 0.25W	01121	CB4735
R1691	315-0153-00			RES., FXD, CMPSN:15K OHM, 5%, 0.25W	01121	CB1535
R1692	315-0153-00			RES., FXD, CMPSN:15K OHM, 5%, 0.25W	01121	CB1535
R1693	315-0393-00			RES., FXD, CMPSN:39K OHM, 5%, 0.25W	01121	CB3935
R1694	317-0203-00			RES., FXD, CMPSN:20K OHM, 5%, 0.125W	01121	BB2035
R1700	311-1273-00			RES., VAR, NONWIR:200K OHM, 10%, 0.5W	32997	3329P-L58-204
R1702	311-1271-00			RES., VAR, NONWIR:50K OHM, 10%, 0.50W	32997	3329P-L58-503
R1704	311-1268-00			RES., VAR, NONWIR:100K OHM, 10%, 0.50W	32997	3329P-L58-103
R1706	311-1267-00			RES., VAR, NONWIR:5K OHM, 10%, 0.5OW	32997	3329P-L58-502
R1708	311-1265-00			RES., VAR, NONWIR:2K OHM, 10%, 0.50W	32997	3329P-L58-202
R1710	315-0203-00			RES., FXD, CMPSN:20K OHM, 5%, 0.25W	01121	CB2035
R1714	315-0101-00			RES., FXD, CMPSN:100 OHM, 5%, 0.25W	01121	CB1015
R1716	317-0183-00			RES., FXD, CMPSN:18K OHM, 5%, 0.125W	01121	BB1835
R1720	317-0302-00			RES., FXD, CMPSN:3K OHM, 5%, 0.125W	01121	BB3025
R1728	321-0289-00			RES., FXD, FILM:10K OHM, 1%, 0.125W	91637	MFF1816Gl0001F
R1729	315-0301-00			RES., FXD, CMPSN:300 OHM, 5%, 0.25W	01121	CB3015
R1730	311-1263-00			RES., VAR, NONWIR:1K OBM, 10%, 0.50W	32997	3329P-L58-102
R1731	315-0203-00			RES., FXD, CMPSN:20K OHM, 5%, 0.25W	01121	CB2035

Ckt No.	Tektronix Part No	Serial/Model No. Eff	Dscont	Name & Description	Mfr Code	Mfr Part Number
R1821	315-0203-00			RES., FXD, CMPSN:20K OHM, 5%, 0.25W	01121	CB2035
R1822	321-0135-00			RES., FXD, FILM:249 OR0, 1%, 0.125W	75042	CEATO-2490F
R1823	321-0318-00			RES., FXD, FILM:20K OHM, 1%, 0.125W	75042	CEATO-2002F
R1824	315-0153-00			RES., FXD, CMPSN:15K OHM, 5%, 0.25W	01121	CB1535
R1825	311-1259-00			RES., VAR, NONWIR:100 OHM, 10%, 0.50W	80294	3329P-L58-101
R1830	315-0103-00			RES., FXD, CMPSN:10K OHM, 5%, 0.25W	01121	CB1035
R1832	315-0163-00			RES., FXD, CMPSN:16K OHM, 5%, 0.25W	01121	CB1635
R1834	317-0301-00			RES., FXD, CMPSN:300 OHM, 5%, 0.125W	01121	BB3015
R1835	311-1263-00			RES., VAR, NONWIR:1K OHM, 10%, 0.50W	73138	62PT-347-0
R1836	315-0103-00			RES., FXD, CMPSN:1OK OHM, 5%, 0.25W	01121	CB1035
R1842	315-0470-00			RES., FXD, CMPSN:47 OHM, 5%, 0.25W	01121	CB4705
R1844	317-0470-00			RES., FXD, CMPSN:47 OHM, 5%, 0.125W	01121	BB4705
R1846	315-0470-00			RES., FXD, CMPSN:47 OHM, 5%, 0.25W	01121	CB4705
R1847	315-0220-00			RES., FXD, CMPSN:22 OHM, 5%, 0.25W	01121	CB2205
R1848	315-0470-00			RES., FXD, CMPSN:47 OHM, 5%, 0.25W	01121	CB4705
R1854	321-0171-00			RES., FXD, FILM:590 OHM, 1%, 0.125W	75042	CEATO-5900F
R1856	317-0104-00			RES., FXD, CMPSN:100K OHM, 5%, 0.125W	01121	BB1045
R1858	317-0104-00			RES., FXD, CMPSN:100K OHM, 5%, 0.125W	01121	BB1045
R1874	317-0302-00			RES., FXD, CMPSN:3K OHM, 5%, 0.125W	01121	BB3025
R1876	317-0103-00			RES., FXD, CMPSN:10K OHM, 5%, 0125W	01121	BB1035
R1878	321-0174-00			RES., FXD, FILM:634 OHM, 1%, 0.125W	75042	CEATO-6340F
R1880	315-0123-00			RES., FXD, CMPSN:12K OHM, 5%, 0.25W	01121	CB1235
R1882	315-0201-00			RES., FXD, CMPSN:200 OHM, 5%, O.25W	01121	CB2015
R1883	315-0392-00			RES., FXD, CMPSN:3.9K OHM, 5%, O.25W	01121	CB3925
R1885	311-1263-00			RES., VAR, NONWIR:1K OHM, 10%, O.SOW	73138	62PT-347-0
R1886	315-0470-00			RES., FXD, CMPSN:47 OHM, 5%, 0.25W	01121	C94705
R1887	321-0223-00			RES., FXD, FILM:2.05K OHM, 1%, 0.125W	75042	CEATO-2051F
R1888	321-0289-00			RES., FXD, FILM:10K OHM, 1%, 0.125W	75042	CEATO-1002?
R1890	317-0104-00			RES., FXD, CMPSN:100K OHM, 5%, 0.125W	01121	BB1045
R1894	317-0104-00			RES., FXD, CMPSN:100K OHM, 5%, 0.125W	01121	BB1045
R1902	315-0123-00			RES., FXD, CMPSN:12K OHM, 5%, 0.25W	01121	CB1235
R1903	315-0202-00			RES., FXD, CMPSN:2K OHM, 5%, 0.25W	01121	CB2025
R1904	315-0102-00			RES., FXD, CMPSN:1K 01HM, 5%, 0.25W	01121	CB1025
R1905	311-1265-00			RES., VAR, NONWIR:2K OHM, 10%, 0.50W	80294	3329P-L58-202
R1906	315-0123-00			RES., FXD, CKPSN:12K OHM, 5%, 0.25W	01121	CB1235
R1908	315-0224-00			RES., FXD, CMPSN:220K OHM, 5%, 0.25W	01121	CB2245
R1910	315-0201-00			RES., FXD, CMPSN:200 OHM, 5%, 0.25W	01121	CB2015
R1912	315-0202-00			RES., FXD, CMPSN:2K OHM, 5%, 0.25W	01121	CB2025
R1914	321-0260-00			RES., FXD, FILM:4.99K OHM, 1%, 0.125W	75042	CEATO-4991F
R1916	315-0301-00			RES., FXD, CKPSN:300 OHM, S%, 0.25W	01121	CB3015
R1918	315-0162-00			RES., FXD, CMPSN:1.6K OHN, 5%, 0.25W	01121	CB1625
R1919	315-0202-00			RES., FXD, CMPSN:2K OHM, 5%, 0.25W	01121	CB2025
R2000	315-0102-00			RES., FXD, CMPSN:1K OHM, 5%, 0.25W	01121	CB1025
R2002	321-0222-00			RES., FXD, FILM:2K OHM, 1%, 0.125W	75042	CEATO-2001F
R2010	321-0272-00			RES., FXD, FILM:6.65K OHM, 1%, 0.125W	75042	CEATO-6651F
R2012	321-0318-00			RES., FXD, FILM:20K OHM, 1%, 0.125W	75042	CEATO-2002F
R2013	321-0291-00			RES., FXD, FILM:10.5K OHM, 1%, 0.125W	75042	CEATO-1052F
R2014	321-0251-00			RES., FXD, FILM:4.02K OHM, 1%, 0.125W	75042	CEATO-4021F
R2015	311-1267-00			RES., VAR, NONWIR:5K OHM, 10%, 0.50W	73138	62PT-350-0
R2020	315-0153-00			RES., FXD, CMPSN:15K OHM, 5%, 0.25W	01121	CB1535
R2022	321-0318-00			RES., FXD, FILM:20K OHM, 1%, 0.125W	75042	CEATO-2002F
R2024	321-0251-00			RES., FXD, FILM:4.02K OHM, 1%, 0.125W	75042	CEATO-4021F
R2025	311-1265-00			RES., VAR, NONWIR:2K OHM, 10%, 0.50W	80294	3329P-L58-202

Ckt No.	Tektronix Part No	Serial/Model No. Eff	Dscont	Name & Description	Mfr Code	Mfr Part Number
R1846	315-0470-00			RES., FXD, CMPSN:47 OHM, 5%, 0.25W	01121	CB4705
R1847	315-0220-00			RES., FXD, CMPSN:22 OHM, 5%, 0.25W	01121	CB2205
R1848	315-0470-00			RES., FXD, CMPSN:47 OHM, 5%, 0.25W	01121	CB4705
R1854	321-0171-00			RES., FXD, FILM:590 OHM, 1%, 0.125W	91637	MFF1816G590ROF
R1856	317-0104-00			RES., FXD, CMPSN:100K OHM, 5%, 0.125W	01121	BB1045
R1858	317-0104-00			RES., FXD, CMPSN:100K OHM, 5%, 0.125W	01121	BB1045
R1874	317-0302-00			RES., FXD, CMPSN:3K OHM, 5%, 0.125W	01121	BB3025
R1876	317-0103-00			RES., FXD, CMPSN:10OK OHM, 5%, 0.125W	01121	BB1035
R1878	321-0174-00			RES., FXD, FILM:634 OHM, 1%, 0.125W	91637	MFF1816G634ROF
R1880	315-0123-00			RES., FXD, CMPSN:12K OHM, 5%, 0.25W	01121	CB1235
R1882	315-0201-00			RES., FXD, CMPSN:200 OHM, 5%, 0.25W	01121	CB2015
R1883	315-0392-00			RES., FXD, CMPSN:3.9K OHM, 5%, 0.25W	01121	CB3925
R1885	311-1263-00			RES., VAR, NONWIR:1K OHM, 10%, 0.50W	32997	3329P-L58-102
R1886	315-0470-00			RES., FXD, CMPSN:47 OHM, 5%, 0.25W	01121	CB4705
R1887	321-0223-00			RES., FXD, FILM:2.05K CHM, 1%, 0.125W	91637	MFF1816G20500F
R1888	321-0289-00			RES., FXD, FILM:100K OHM, 1%, 0.125W	91637	MFF1816G10001F
R1890	317-0104-00			RES., FXD, CMPSN:100K OHM, 5%, 0.125W	01121	EB1045
R1894	317-0104-00			RES., FXD, CMPSN:100K OHM, 5%, 0.125W	01121	BB1045
R1902	315-0123-00			RES., FXD, CMPSN:12K OHM, 5%, 0.25W	01121	CB1235
R1903	315-0202-00			RES., FXD, CMPSN:2K OHM, 5%, 0.25W	01121	CB2025
R1904	315-0102-00			RES., FXD, CMPSN:1K OHM, 5%, 0.25W	01121	CB1025
R1905	311-1265-00			RES., VAR, NONWIR:2K OHM, 10%, 0.50W	32997	3329P-L58-202
R1906	315-0123-00			RES., FXD, CMPSN:12K OHM, 5%, 0.25W	01121	CB1235
R1908	315-0224-00			RES., FXD, CMPSN:220K OHM, 5%, 0.25W	01121	CB2245
Rl910	315-0201-00			RES., FXD, CMPSN:200 OHM, 5%, 0.25W	01121	CB2015
R1912	315-0202-00			RES., FXD, CMPSN:2K OHM, 5%, 0.25W	01121	CB2025
R1914	321-0260-00			RES., FXD, FILM:4.99K OHM, 1%, 0.125W	91637	MFF1816G49900F
R1916	315-0301-00	5010100	B020211	RES., FXD, CMPSN:300 OHM, 5%, 0.25W	01121	CB3015
R1916	315-0241-00	B020212		RES., FXD, CMPSN:240 (OM, 5%, 0.25W	01121	CB2415
R1918	315-0162-00			RES., FXD, CMPSN:1.6K OHM, 5%, 0.25W	01121	CB1625
R1919	315-0202-00			RES., FXD, CMPSN:2K OHM, 5%, 0.25W	01121	CB2025
R2000	315-0102-00			RES., FXD, CMPSN:1K OHM, 5%, 0.25W	01121	CB1025
R2002	321-0222-00			RES., FXD, FILM:2K OHM, 1%, 0.125W	91637	MFF1816G20000F
R2010	321-0272-00			RES., FXD, FILI:6.65K OHM, 1%, 0.125W	91637	MFF1816G66500F
R2012	321-0318-00			RES., FXD, FILM:20K OHM, 1%, 0.125W	91637	MFF1816G20001F
R2013	321-0291-00			RES., FXD, FILM:10.5K OHM, 1%, 0.125W	91637	MFF1816G10501F
R2014	321-0251-00			RES., FXD, FILM:4.02K OHM, 1%, 0.125N	91637	MFF1816G40200F
R2015	311-1267-00			RES., VAR, NONWIR:5K OHM, 10%, 0.50W	32997	3329P-L58-502
h2020	315-0153-00			RES., FXD, CMPSN:15K OHM, 5%, 0.25W	01121	CB1535
R2022	321-0318-00			RES., FXD, FILM:20K OHM, 1%, 0.125W	91637	MFF1816G20001F
R2024	321-0251-00			RES., FXD, FILM:4.02K OHM, 1%, 0.125W	91637	MFF1816G40200F
R2025	311-1265-00			RES., VAR, NONWIR:2K OHM, 10%, 0.50W	32997	3329P-L58-202
R2026	321-0237-00			RES., FXD, FIIM:2.87K OHM, 1%, 0.125W	91637	MFF1816G28700F
R2027	321-0246-00			RES., FXD, FILM:3.57K OHM, 1%, 0.125W	91637	MFF1816G35700F
R2028	321-0306-00			RES., FXD, FILM:15K OHM, 1%, 0.125W	91637	MFF1816G15001F
R2030	315-0100-00			RES., FXD, CMPSN:10 OHM, 5%, 0.25W	01121	CB1005
R2032	321-0204-00			RES., FXD, FILM:1.3K OHM, 1%, O.125W	91637	MFF1816G1300OF
R2033	321-0334-00			RES., FXD, FILM:29.4K OHM, 1%, 0.125W	91637	MFF1816G29401F
R2040	315-0121-00			RES., FXD, CMPSN:120 OHM, 5%, 0.25W	01121	CB1215
R2042	307-0103-00			RES., FXD, CMPSN:2.7 OHM, 5%, 0.25W	01121	CB27G5
R2052	315-010 -00			RES., FXD, CMPSN:10K OHM, 5%, 0.25W	01121	CB1035
R2060	315-0511-00			RES., FXD, CMPSN:510 OHM, 5%, 0.25W	01121	CB5115
R2062	315-0100-00	B010100	B010114	RES., FXD, CMPSN:10 OHM, 5%, 0.25W	01121	CB1005

Ckt No.	Tektronix Part No	Serial/Model No. Eff	Dscont	Name & Description	Mfr Code	Mfr Part Number
R2278	317-0104-00			RES., FXD, CMPSN:100K OHM, 5%, 0.125W	01121	BB1045
R2280	317-0104-00			RES., FXD, CMPSN:100K OHM, 5%, 0.125W	01121	BB1045
R2282	317-0104-00			RES., FXD, CMPSN:100K OHM, 5%, 0.125W	01121	BB1045
R2284	317-0470-00			RES., FXD, CMPSN:47 OHM, 5%, 0.125W	01121	BB4705
R2286	317-0470-00			RES., FXD, CMPSN:47 OHM, 5%, 0.125W	01121	BB4705
R2287	317-0513-00			RES., FXD, CMPSN:51K OHM, 5%, 0.125W	01121	BB5135
R2289	317-0470-00			RES., FXD, CMPSN:47 OHM, 5%, 0.125W	01121	BB4705
R2290	315-0104-00			RES., FXD, CMPSN:100K OHM, 5%, 0.25W	01121	CB1045
R2291	317-0470-00			RES., FXD, CMPSN:47 OHM, 5%, 0.125W	01121	BB4705
R2292	315-0103-00			RES., FXD, CMPSN:100K OHM, 5%, 0.25W	01121	CB1035
R2294	315-0103-00			RES., FXD, CMPSN:10OK OHM, 5%, 0.25W	01121	CB1035
R2300	321-0315-00			RES., FXD, FILM:18.7K OHM, 1%, 0.125W	75042	CEATO-1872F
R2302	321-0344-00			RES., FXD, FILM:37.4K OHM, 1%, 0.125W	75042	CEATO-3742F
R2304	321-0373-00			RES., FXD, FILM:75K OHM, 1%, 0.125W	75042	CEATO-7502F
R2306	321-0402-00			RES., FXD, FILM:1SOK OHM, 1%, 0.125W	75042	CEATO-1503F
R2308	321-0402-00			RES., FXD, FILM:150K OHM, 1%, 0.125W	75042	CEATO-1503F
R2315	315-0223-00			RES., FXD, CMPSN:22K OHM, 5%, 0.25W	01121	CB2235
R2316	315-0101-00			RES., FXD, CMPSN:100 OHM, 5%, 0.25W	01121	CB1015
R2318	315-0101-00			RES., FXD, CMPSN:100 OHM, 5%, 0.25W	01121	CB1015
R2320	321-0356-00			RES., FXD, FILM:49.9K OHM, 1%, 0.125W	75042	CEATO-4992F
R2322	321-0327-00			RES., FXD, FILM:24.9K OHM, 1%, 0.125W	75042	CEATO-2492F
R2324	321-0321-00			RES., FXD, FILM:21.5K OHM, 1%, 0.125W	75042	CEATO-2152F
R2330	321-0344-00			RES., FXD, FILM:37.4K OHM, 1%, 0.125W	75042	CEATO-3742F
R2332	321-0373-00			RES., FXD, FILM:75K OHM, 1%, 0.125W	75042	CEATO-7502F
R2334	321-0402-00			RES., FXD, FILM:150K OHM, 1%, 0.125W	75042	CEATO-1503F
R2336	321-0327-00			RES., FXD, FILM:24.9K OHM, 1%, 0.125W	75042	CEATO-2492F
R2338	321-0321-00			RES., FXD, FILM:21.5K OHM, 1%, 0.125W	75042	CEATO-2152F
R2340	321-0402-00			RES., FXD, FILM:150K OHM, 1%, 0.125W	75042	CEATO-1503F
R2342	321-0306-00			RES., FXD, FILM:15K OHM, 1%, 0.125W	75042	CEATO-1502F
R2344	315-0101-00			RES., FXD, CMPSN:100 OHM, 5%, 0.25W	01121	CB1015
R2346	315-0103-00			RES., FXD, CMPSN:1OK OHM, 5%, 0.25W	01121	CB1035
R2348	321-0344-00			RES., FXD, FILM:37.4K OHM, 1%, 0.125W	75042	CEATO-3742F
R2350	315-0101-00			RES., FXD, CMPSN:100 OHM, 5%, 0.25W	01121	CB1015
R2352	321-0371-00			RES., FXD, FILM:71.5K OHM, 1%, 0.125W	75042	CEATO-7152F
R2354	315-0105-00			RES., FXD, CMPSN:iM OHM, 5%, 0.25W	01121	CB1055
R2356	315-0101-00			RES., FXD, CMPSN:100 OHM, 5%, 0.25W	01121	CB1015
R2358	315-0101-00			RES., FXD, CMPSN:100 OHM, 5%, 0.25W	01121	CB1015
R2360	321-0371-00			RES., FXD, FILM:71.5K OHM, 1%, 0.125W	75042	CEATO-7152F
R2362	321-0400-00			RES., FXD, FILM:143K OHM, 1%, 0.125W	75042	CEATO-1433F
R2364	321-0333-00			RES., FXD, FILM:28.7K OHM,1%, 0.125W	75042	CEATO-2872F
R2366	321-0354-00			RES., FXD, FILM:47.SK OHM, 1%, 0.125W	75042	CEATO-4752F
R2368	317-0047-00			RES., FXD, CMPSN:4.7 OHM, 5%, 0.125W	01121	BB4R705
R2371	317-0047-00			RES., FXD, CMPSN:4.7 OHM, 5%, 0.125W	01121	BB4R705
R2373	317-0470-00			RES., FXD, CMPSN:47 OHM, 5, 0.125W	01121	BB4705
R2377	317-0470-00			RES., FXD, CMPSN:47 OHM, 5%, 0.125W	01121	BB4705
R2381	317-0470-00			RES., FXD, CMPSN:47 OHM, 5%, 0.125W	01121	BB4705
R2382	321-0431-00			RES., FXD, FILM:301K OHM, 1%, 0.125W	75042	CEATO-3013F
R2383	321-0306-00			RES., FXD, FILM:15K OHM, 1%, 0.125W	75042	CEATO-1502F
R2384	317-0470-00			RES., FXD, CMPSN:47 OHM, 5%, 0.125W	01121	BB4705
R2386	317-0470-00			RES., FXD, CMPSN:47 OHM, 5%, 0.125W	01121	BB4705
R2387	317-0470-00			RES., FXD, CMPSN:47 OHM, 5%, 0.125W	01121	BB4705
R2388	317-0470-00			RES., FXD, CMPSN:47 OHM, 5%, 0.125W	01121	BB4705
R2389	317-0470-00			RES., FXD, CMPSN:47 OHM, 5%, 0.125W	01121	BB4705

Ckt No.	Tektronix Part No	Serial/Model No. Eff	Dscont	Name & Description	Mfr Code	Mfr Part Number
R2300	321-0315-00			RES., FXD, FILM:18.7K OHM, 1%, 0.125W	91637	MFF1816G18701F
R2302	321-0344-00			RES., FXD, FILM:37.4K OHM, 1%, 0.125W	91637	MFF1816G37401F
R2304	321-0373-00			RES., FXD, FIIM:75K OHM, 1%, 0.125W	91637	MFF1816G75001F
R2306	321-0402-00			RES., FXD, FILM:150K OHM, 1%, 0.125W	91637	MFF1816G15002F
R2308	321-0402-00			RES., FXD, FILM:150K OHM, 1%, 0.125W	91637	MFF1816G15002F
R2315	315-0223-00			RES., FXD, CMPSN:22K OHM, 5%, 0.25W	01121	CB2235
R2316	315-0101-00			RES., FXD, CMPSN:100 OHM, 5%, 0.25W	01121	CB1015
R2318	315-0101-00			RES., FXD, CMPSN:100 OHM, 5%, 0.25W	01121	CB1015
R2320	321-0356-00			RES., FXD, FIILM:49.9K OHM, 1%, 0.125W	91637	MFF1816G49901F
R2322	321-0327-00			RES., FXD, FILM:24.9K OHM, 1%, 0.125W	91637	MFF1816G24901F
R2324	321-0321-00			RES., FXD, FILM:21.5K OHM, 1%, 0.125W	91637	MFF1816G21501F
R2330	321-0344-00			RES., FXD, FILM:37.4K OHM, 1%, 0.125W	91637	MFF1816G37401F
R2332	321-0373-00			RES., FXD, FILM:75K OHM, 1%, 0.125W	91637	MFF1816G75001F
R2334	321-0402-00			RES., FXD, FILM:150K OHM, 1%, 0.125W	91637	MFF1816G15002F
R2336	321-0327-00			RES., FXD, FILM:24.9K OHM, 1%, 0.125W	91637	MFF1816G24901F
R2338	321-0321-00			RES., FXD, FIIM:21.5K OHM, 1%, 0.125W	91637	MFF1816G21501F
R2340	321-0402-00			RES., FXD, FIILM:150K OHM, 1%, 0.125W	91637	MFF1816G15002F
R2342	321-0306-00			RES., FXD, FIILM:15K OHM, 1%, 0.125W	91637	MFF1816G15001F
R2344	315-0101-00			RES., FXD, CMPSN:100 OHM, 5%, 0.25W	01121	CB1015
R2346	315-0103-00			RES., FXD, CMPSN:10K OHM, 5%, 0.25W	01121	CB1035
R2348	321-0344-00			RES., FXD, FILM:37.4K OHM, 1%, 0.125W	91637	MFF1816G37401F
R2350	315-0101-00			RES., FXD, CMPSN:100 OHM, 5%, 0.25W	01121	CB1015
R2352	321-0371-00			RES., FXD, FILM:71.5K OHM, 1%, 0.125W	91637	MFF1816G71501F
R2354	315-0105-00			RES., FXD, CMPSN:1M OHM, 5%, 0.25W	01121	CB1055
R2356	315-0101-00			RES., FXD, CMPSN:100 OHM, 5%, 0.25W	01121	CB1015
R2358	315-0101-00			RES., FXD, CMPSN:100 OHM, 5%, 0.25W	01121	CB1015
R2360	321-0371-00			RES., FXD, FILM:71.5K OHM, 1%, 0.125W	91637	MFF1816G71501F
R2362	321-0400-00			RES., FXD, FILM:143K OHM, 1%, 0.125W	91637	MFF1816G14302F
R2364	321-0333-00			RES., FXD, FILM:28.7K OHM, 1%, 0.125W	91637	MFF1816G28701F
R2366	321-0354-00			RES., FXD, FILM:47.5K OHM, 1%, 0.125W	91637	MFF1816G47501F
R2368	317-0047-00			RES., FXD, CMPSN:4.7 OHM, 5%, 0.125W	01121	BB47G5
R2371	317-0047-00			RES., FXD, CMPSN:4.7 OHM, 5%, 0.125W	01121	BB47G5
R2373	317-0470-00			RES., FXD, CMPSN:47 OHM, 5%, 0.125W	01121	BB4705
R2377	317-0470-00			RES., FXD, CMPSN:47 OHM, 5%, 0.125W	01121	BB4705
R2381	317-0470-00			RES., FXD, CMPSN:47 OHM, 5%, 0.125W	01121	BB4705
R2382	321-0431-00			RES., FXD, FIIM:301K OHM, 1%, 0.125W	91637	MFF1816G30102F
R2383	321-0306-00			RES., FXD, FILM:15K OHM, 1%, 0.125W	91637	MFF1816G15001F
R2384	317-0470-00			RES., FXD, CMPSN:47 OHM, 5%, 0.125W	01121	BB4705
R2386	317-0470-00			RES., FXD, CMPSN:47 OHM, 5%, 0.125W	01121	BB4705
R2387	317-0470-00			RES., FXD, CMPSN:47 OHM, 5%, 0.125W	01121	BB4705
R2388	317-0470-00			RES., FXD, CMPSN:47 OHM, 5%, 0.125W	01121	BB4705
R2389	317-0470-00			RES., FXD, CMPSN:47 OHM, 5%, 0.125W	01121	BB4705
R2391	317-0470-00			RES., FXD, CMPSN:47 OHM, 5%, 0.125W	01121	BB4705
R2393	317-0470-00			RES., FXD, CMPSN:47 OHM, 5%, 0.125W	01121	BB4705
R2396	317-0222-00			RES., FXD, CMPSN:2.2K OHM, 5%, 0.125W	01121	BB2225
R2397	317-0105-00	B010100	B020274	RES., FXD, CMPSN:IM OHM, 5%, 0.125W	01121	BB1055
R2397	317-0102-00	B020275		RES., FXD, CMPSN:1K OHM, 5%, 0.125W	01121	BB1025
R3000	307-0474-00			RES, NTWK, FXD FI:17 RES. NETWORK	80009	307-0474-00
R3010	307-0445-00			RES, NTWK, FXD, FI:4.7K OHM, 20%, C9) RES	03888	A3HT07
R3012	315-0392-00			RES., FXD, CMPSN:3.9K OHM, 5%, 0.25W	01121	CB3925
R3014	321-0185-00			RES., FXD, FILM:825 OHM, 1%, 0.125W	91637	MFF1816G825R0F
R3022	315-0102-00			RES., FXD, CMPSN:1K OHM, 5%, 0.25W	01121	CB1025
R3024	321-0250-00	B010100	B030366	RES., FXD, FILM:3.92K OHM, 1%, 0.125W	91637	MFF1816G39200F

Ckt No.	Tektronix Part No	Serial/Model No. Eff	Dscont	Name & Description	Mfr Code	Mfr Part Number
R4561	321-0409-00			RES., FXD, FI.LM:178K OHM, 1%, 0.125W	91637	MFF1816G17802F
R4562	321-0289-00			RES., FXD, FILM:10K OHM, 1%, 0.125W	91637	MFF1816G1000l1F
R4563	321-0399-00	B010100	B010149	RES., FXD, FIIM:140K CHM, 1%, 0.125W	91637	MFF1816G14002F
R4563	321-0406-00	B010150		RES., FXD, FIIM:165K OHM, 1%, 0.125W	91637	MFF1816G16502F
R4564	315-0472-00	8010100	B010114	RES., FXD, CMPSN:4.7K OHM, 5%, 0.25W	01121	CB4725
R4564	321-0253-00	B010115		RES., FXD, FILM:4.22K OHM, 1%, 0.125W	91637	MFF1816G42200F
R4565	311-1263-00			RES., VAR, NONWIR:1K COHM, 10%, 0.50W	32997	3329P-L58-102
R4566	321-0289-00	B010100	B030322	RES., FXD, FILM:100K OHM, 1%, 0.125W	91637	MFF1816G10001F
R4566	321-0342-00	B030323		RES., FXD, FILM:35.7K OHM, 1%, 0.125W	91637	MFF1816G35701F
R4567	315-0153-00	XB030323	B030339	RES., FXD, CMPSN:15K OHM, 5%, 0.25W	01121	CB1535
R4567	315-0133-00	B030340		RES., FXD, CMPSN-13K OHM, 5%, 0.25W	01121	CB1335
R4568	315-0474-00			RES., FXD, CMPSN:470K OHM, 5%, 0.25W	01121	CB4745
R4569	315-0103-00	XB030323		RES., FXD, CMPSN:10K OHM, 5%, 0.25W	01121	CB1035
R4570	311-1272-00			RES., VAR, NONWIR:100K OHM, 10%, 0.50W	32997	3329P-L58-104
R4571	315-0562-00	XB010116		RES., FXD, CMPSN:5.6K OHM, 5%, 0.25W	01121	CB5625
R4572	321-0318-00			RES., FXD, FILM:20K OHM, 1%, 0.125W	91637	MFF1816G20001F
R4573	315-0562-00	XB010116		RES., FXD, CMPSN:5.6K OHM, 5%, 0.25W	01121	CB5625
R4574	315-0302-00			RES., FXD, CMPSN:3K OHM, 5%, 0.25W	01121	CB3025
R4575	321-0201-00			RES., FXD, FILM:1.21K OHM, 1%, 0.125W	91637	MFF1816G12100F
R4576	321-0261-00			RES., FXD, FILM:5.11K OHM, 1%, 0.125W	91637	MFF1816G51100F
R4577	315-0471-00			RES., FXD, CMPSN:470 OHM, 5%, 0.25W	01121	CB4715
R4578	315-0103-00	B010100	B010115X	RES., FXD, CMPSN:10K OHM, 5%, 0.25W	01121	CB1035
R4579	315-0510-00	XB010116		RES., FXD, CMPSN:51 OHM, 5%, 0.25W	01121	CB5105
R4580	315-0910-00	B010100	B010115X	RES., FXD, CMPSN:91 OHM, 5%, 0.25W	01121	CB9105
R4581	315-0243-00	XB010116		RES., FXD, OPSN:24K OHM, 5%, 0.25W	01121	CB2435
R4582	321-0277-00			RES., FXD, FILM:7.5K OHM, 1%, 0.125W	91637	MFF1816G75000F
R4583	315-0471-00	XB010116		RES., FXD, CMPSN:470 OHM, 5%, 0.25W	01121	CB4715
R4585	311-1267-00			RES., VAR, NONWIR:5K OHM, 10%, 0.50W	32997	3329P-L58-502
R4586	321-0289-00			RES., FXD, FILM:10K OHM, 1%, 0.125W	91637	MFF1816G10001F
R4588	321-0289-00			RES., FXD, FILM:10K OHM, 1%, 0.125W	91637	MFF1816G10001F
R4589	315-0562-00	XB010116		RES., FXD, CMPSN:5.6K OHM, 5%, 0.25W	01121	C85625
R4591	315-0562-00	XB010116		RES., FXD, CMPSN:5.6K OHM, 5%, 0.25W	01121	CB5625
R4593	315-0510-00	XB010116		RES., FXD, CMPSN:51 OHM, 5%, 0.25W	01121	CB5105
R4595	315-0471-00	XB010116		RES., FXD, CMPSN:470 OHM, 5%, 0.25W	01121	CQ4715
R4602	315-0102-00			RES., FXD, CMPSN:1K OHM, 5%, 0.25W	01121	CB1025
R4609	315-0103-00			RES., FXD, CMPSN:10K OHM, 5%, 0.25W	01121	CB1035
R4610	315-0104-00			RES., FXD, CMPSN:100K OHM, 5%, 0.25W	01121	CB1045
R4611	315-0104-00			RES., FXD, CMPSN:100K OHM, 5%, 0.25W	01121	CB1045
R4612	315-0103-00			RES., FXD, CMPSN:10K OHM, 5%, 0.25W	01121	C81035
R4613	315-0203-00			RES., FXD, CMPSN:20K OHM, 5%, 0.25W	01121	CB2035
R4614	321-0289-00			RES., FXD, FILM:10K OHM, 1%, 0.125W	91637	MFF1816G10001F
R4616	321-0289-00			RES., FXD, FILM:10K OHM, 1%, 0.125W	91637	MFF1816G10001F
R4618	315-0393-00			RES., FXD, CMPSN:39K OHM, 5%, 0.25W	01121	CB3935
R4620	315-0102-00			RES., FXD, CMPSN:1K OHM, 5%, 0.25W	01121	CB1025
R4622	315-0102-00			RES., FXD, CMPSN:1K OHM, 5%, 0.25W	01121	CB1025
R4624	321-0282-00	B010100	B010104	RES., FXD, FILM:8.45K OHM, 1%, 0.125W	91637	MFF1816G84500F
R4624	321-0289-00	B010105		RES., FXD, FILM:10K OHM, 1%, 0.125W	91637	MFF1816G10001F
R4625	311-1265-00	B010100	B010104	RES., VAR, NONWIR:2K OHM, 10%, 0.50W	32997	3329P-L58-202
R4625	311-1266-00	B010105		RES., VAR, NONWIR:2.5K OHM, 10%, 0.50W	32997	3329P-L58-252
R4626	315-0682-00			RES., FXD, CMPSN:6.8K CHM, 5%, 0.25W	01121	CB6825
R4627	321-0486-00			RES., FXD, FILM:1.13M OHM, 1%, 0.125W	91637	HMF188G11303F
R4628	321-0289-00			RES., FXD, FILM:10K OHM, 1%, 0.125W	91637	MFF1816G1000F
R4629	315-0103-00			RES., FXD, CMPSN:10K OHM, 5%, 0.25W	01121	CB1035
R4630	315-0100-02			RES., FXD, CMPSN:10 OHM, 5%, 0.25W	01121	CB1005
R4633	315-0103-00			RES., FXD, CMPSN:10K OHM, 5%, 0.25W	01121	CB1035
R4634	315-0100-02			RES., FXD, CMPSN:10 OHM, 5%, 0.25W	01121	CB1005
R4637	315-0103-00			RES., FXD, CMPSN:10K OHM, 5%, 0.25W	01121	CB1035

Ckt No.	Tektronix Part No	Serial/Model No. Eff	Dscont	Name & Description	Mfr Code	Mfr Part Number
R4561	321-0409-00			RES., FXD, FILM:178K OHM, 1%, 0.125W	91637	MFF1816G17802F
R4562	321-0289-00			RES., FXD, FILM:10K OHM, 1%, 0.125W	91637	MFF1816G10001F
R4563	321-0399-00	B010100	B010149	RES., FXD, FILM:140K OHM, 1%, 0.125W	91637	MFF1816G14002F
R4563	321-0406-00	B010150		RES., FXD, FILM:165K OM, 1%%, 0.125W	91637	MFF1816G16502F
R4564	315-0472-00	B010100	B010114	RES., FXD, CMPSN:4.7K OHM, 5%, 0.25W	01121	CB4725
R4564	321-0253-00	B010115		RES., FXD, FILM:4.22K OHM, 1%, 0.125W	91637	MFF1816G42200F
R4565	311-1263-00			RES., VAR, NONWIR:1K OHM, 10%, 0.50W	32997	3329P-L58-102
R4566	321-0289-00	B010100	B030322	RES., FXD, FILM:10K OHM, 1%, 0.125W	91637	MFF1816G10001F
R4566	321-0342-00	B030323		RES., FXD, FILM:35.7K OHM, 1%, 0.125W	91637	MFF1816G35701F
R4567	315-0153-00	XB030323	B030339	RES., FXD, CMPSN:15K OHM, 5%, 0.25W	01121	CB1535
R4567	315-0133-00	B030340		RES., FXD, CMPSN:13K OHM, 5%, 0.25W	01121	CB1335
R4568	315-0474-00			RES., FXD, CMPSN:470K OHM, 5%, 0.25W	01121	CB4745
R4569	315-0103-00	XB030323		RES., FXD, CMPSN:1OK OHM, 5%, 0.25W	01121	CB1035
R4570	311-1272-00			RES., VAR, NONWIR:100K OHM, 10%, O.50W	32997	3329P-L58-104
R4571	315-0562-00	XB010116		RES., FXD, CMPSN:5.6K OHM, 5%, 0.25W	01121	CB5625
R4572	321-0318-00			RES., FXD, FILM:20K OHM, 1%, 0.125W	91637	MFF1816G20001F
R4573	315-0562-00	XB010116		RES., FXD, CMPSN:5.6K OHM, 5%, 0.25W	01121	CB5625
R4574	315-0302-00			RES., FXD, CMPSN:3K OHM, 5%, 0.25W	01121	CB3025
R4575	321-0201-00			RES., FXD, FILM:1.21K OHM, 1%, 0.125W	91637	MFF1816G12100F
R4576	321-0261-00			RES., FXD, FILM:5.11K OHM, 1%, 0.125W	91637	MFF1816G51100F
R4577	315-0471-00			RES., FXD, CMPSN:470 OHM, 5%, 0.25W	01121	CB4715
R4578	315-0103-00	B010100	B010115X	RES., FXD, CMPSN:10K OHM, 5%, 0.25W	01121	CB1035
R4579	315-0510-00	XB010116		RES., FXD, CMPSN:51 OHM, 5%, 0.25W	01121	CB5105
R4580	315-0910-00	B010100	B010115X	RES., FXD, CMPSN:91 OHM, 5%, 0.25W	01121	CB9105
R4581	315-0243-00	XB010116		RES., FXD, CMPSN:24K OHM, 5%, 0.25W	01121	CB2435
R4582	321-0277-00			RES., FXD, FILM:7.5K OHM, 1%, 0.125W	91637	MFF1816G75000F
R4583	315-0471-00	XB010116		RES., FXD, CMPSN:470 OHM, 5%, 0.25W	01121	CB4715
R4585	311-1267-00			RES., VAR, NONWIR:5K OHM, 10%, 0.50N	32997	3329P-L58-502
R4586	321-0289-00			RES., FXD, FILM:10K OHM, 1%, 0.125W	91637	MFF1816G10001F
R4588	321-0289-00			RES., FXD, FILM:10K OHM, 1%, 0.125N	91637	MFF1816G10001F
R4589	315-0562-00	XB010116		RES., FXD, CMPSN:5.6K OHM, 5%, 0.25W	01121	CB5625
R4591	315-0562-00	XB010116		RES., FXD, CMPSN:5.6K OHM, 5%, 0.25W	01121	CB5625
R4593	315-0510-00	XB010116		RES., FXD, CMPSN:51 OHM, 5%, 0.25W	01121	CB5105
R4595	315-0471-00	XB010116		RES., FXD, CMPSN:470 OHM, 5%, 0.25W	01121	CB4715
R4602	315-0102-00			RES., FXD, CMPSN:1K OHM, 5%, 0.25W	01121	CB1025
R4609	315-0103-00			RES., FXD, CMPSN:10K OHM, 5%, 0.25W	01121	CB1035
R4610	315-0104-00			RES., FXD, CMPSN:100K OHM, 5%, 0.25W	01121	CB1045
R4611	315-0104-00			RES., FXD, CMPSN:100K OHM, 5%, 0.25W	01121	CB1045
R4612	315-0103-00			RES., FXD, CMPSN:10K OHM, 5%, 0.25W	01121	CB1035
R4613	315-0203-00			RES., FXD, CMPSN:20K OHM, 5%, 0.25W	01121	CB2035
R4614	321-0289-00			RES., FXD, FILM:10K OHM, 1%, 0.125W	91637	MFF1816G10001F
R4616	321-0289-00			RES., FXD, FILM:10K OHM, 1%, 0.125W	91637	MFF1816G10001F
R4618	315-0393-00			RES., FXD, CMPSN:39K OHM, 5%, 0.25W	01121	CB3935
R4620	315-0102-00			RES., FXD, CMPSN:1K OHM, 5%, 0.25N	01121	CB1025
R4622	315-0102-00			RES., FXD, CMPSN:1K OHM, 5%, 0.25W	01121	CB1025
R4624	321-0282-00	B010100	B010104	RES., FXD, FIIM:8.45K OHM, 1%, 0.125W	91637	MFF1816G84500F
R4624	321-0289-00	B010105		RES., FXD, FILM:1OK OHM, 1%, 0.125W	91637	MFF1816G1000llF
R4625	311-1265-00	BO10100	B010104	RES., VAR, NONWIR:2K OHM, 10%, 0.50W	32997	3329P-L58-202
R4625	311-1266-00	B010105		RES., VAR, NONWIR:2.5K OHM, 10%, 0.50W	32997	3329P-L58-252
R4626	315-0682-00			RES., FXD, CMPSN:6.8K OHM, 5%, 0.25W	01121	CB6825
R4627	321-0486-00			RES., FXD, FILM:1.13M OHM, 1%, 0.125W	91637	HMF188G11303F
R4628	321-0289-00			RES., FXD, FILM:1OK OHM, 1%, 0.125N	91637	MFF1816G10001F
R4629	315-0103-00			RES., FXD, CMPSN:10K OHM, 5%, 0.25W	01121	CB1035

Ckt No.	Tektronix Part No	Serial/Model No. Eff	Dscont	Name & Description	Mfr Code	Mfr Part Number
U145	156-0177-00			MICROCIRCUIT, LI:DUAL LINE RECEIVER	01295	SN75107AN
U160	156-0569-00			MICROCIRCUIT, DI:BCD COUNTER TI	01295	SN74LS190N
U165	156-0422-00			MICROCIRCUIT, DI:UP/DOWN SYNC BINARYCOUNTER	01295	SN74LS191N
U170	156-0508-00			MICROCIRCUIT, DI:QUAD R-S LATCH, TTL	01295	SN74279N
U175	156-0567-00			MICROCIRCUIT, DI:DUAL J-K NEG EDGE TRIG F-F	01295	SN74LS113N
U180	156-0506-00			MICROCIRCUIT, DI:QUAD SGL ENDED		
				DUAL LINE D	27014	DM8831N
U185	156-0516-00			MICROCIRCUIT, LI:OPERATIONAL AMPLIFIER	24355	AD523J
U192	156-0047-00	B010100	B020274	MICROCIRCUIT, DI:TPL 3-INPUT POS NAND GATE	80009	156-0047-00
U192	156-0386-00	B020275		MICROCIRCUIT, DI:TRIPLE 3-INPUT NAND GATE	01295	SN74LS10N
U194	156-0567-00			MICROCIRCUIT, DI:DUAL J-K NEG EDGE TRIG F-F	01295	SN74LS113N
U195	156-0315-00			MICROCIRCUIT, DI:BCD +O BINARYCONV	01295	SN74184AN
U196	156-0506-00			MICROCIRCUIT, DI:QUAD SGL ENDED DUAL LINE D	27014	DM8831N
U198	156-0516-00			MICROCIRCUIT, LI:OPERATIONAL AMPLIFIER	24355	AD523J
U200	156-0079-00	B010100	B020274	MICROCIRCUIT, DI:DECADE COUNTER, TTL	07263	9390PC
U200	156-0656-00	B020275		MICROCIRCUIT, DI:DECADE COUNTER	01295	SN74LS90N
U205	156-0117-00	B010100	B020274	MICROCIRCUIT, DI:SYNC 4-BIT BINARY COUNTER	01295	SN74161N
U205	156-0784-00	B020275		MICROCIRCUIT, DI:SYNC 4-BIT BINARY COUNTER		
U210	156-0084-00	B010100	B020274	MICROCIRCUIT, DI:SYNCHRONOUS DECADE COUNTER	07263	9310DC
U210	156-0788-00	B020275		MICROCIRCUIT, DI:SYNC 4-BIT CNTR W/SYN CLEAR		
U215	156-0084-00			MICROCIRCUIT, DI:SYNCHRONOUS DECADE COUNTER	07263	9310DC
U225	156-0517-00			MICROCIRCUIT, DI:DOUBLE BAL MIXER	01295	SN76514N
U230	156-0124-00			MICROCIRCUIT, DI:SGL FREQ/PHASE DETECTOR	04713	MC4044P
U260	156-0177-00			MICROCIRCUIT, LI:DUAL LINE RECEIVER	01295	SN75107AN
U265	156-0041-00			MICROCIRCUIT, DI:DUAL D-TYPE FLIP-FLOP	27014	DM7474N
U270	156-0079-00			MICROCIRCUIT, DI:DECADE COUNTER, TTL	07263	9390PC
U305	156-0158-00			MICROCIRCUIT, LI:DUAL OPERATIONAL AMPLIFIER	80009	156-0158-00
U310	156-0077-00			MICROCIRCUIT, LI:OPERATIONAL AMPLIFIER	27014	LM301AH
U325	155-0108-00			MICROCIRCUIT, LI:OPERATIONAL AMPLIFIER	80009	155-0108-00
U335	156-0077-00			MICROCIRCUIT, LI:OPERATIONAL AMPLIFIER	27014	LM301AH
U340	155-0108-00			MICROCIRCUIT, LI:OPERATIONAL AMPLIFIER	80009	155-0108-00
U345	156-0077-00			MICROCIRCUIT, LI:OPERATIONAL AMPLIFIER	27014	LM301AH
U375	156-0067-01			MICROCIRCUIT, LI :OPERATIONAL AMPLIFIER	80009	156-0067-01
U395	156-0626-00			MICROCIRCUIT, DI:DUAL DECADE CNTR	01295	SN74390N
U510	156-0503-00			MICROCIRCUIT, DI:HEX INVERTER BUFFER	34371	MD1-4009-9
U515	156-0463-28	B010100	B010134	MICROCIRCUIT DI:8-BIT PROGRAMMABLE ROM	80009	156-0463-00
U515	156-0726-00	B010135		MICROCIRCUIT, DI:ROM U2265 PROGRAMMED	80009	156-0726-00
U520	156-0683-00			MICROCIRCUIT, DI:HEX. BUS RCVR	18324	8T37B
U525	156-0547-00			MICROCIRCUIT, DI:QUAD TOW-INPUT MULTIPLEXER	27014	MM74C157N
U530	156-0350-00			MICROCIRCUIT, DI:QUAD 2-INPUT NAND GATE	02735	CD4011AE
U535	156-0349-00			MICROCIRCUIT, DI:QUAD 2-INPUT NOR GATE	27014	CD4001CJ
U540	156-0548-00			MICROCIRCUIT, DI:FOUR-BIT MAGNITUDE COMPTR	04713	MC14585CP
U550	156-0144-00			MICROCIRCUIT, DI:3-INPUT POS NAND GATE	01295	SN7412N
U555	156-0186-00			MICROCIRCUIT, DI:QUAD 2-INPUT NAND GATE	01295	SN7403N
U560	156-0178-00			MICROCIRCUIT, DI:TRIPLE 3-INPUT NOR GATE	01295	SN7427N
U565	156-0403-00			MICROCIRCUIT, DI:HEX. INV W/OPEN COLL OUTPS	01295	SN74S05N
U570	156-0043-00			MICROCIRCUIT, DI:QUAD 2-INPUT POS NOR GATE	80009	156-0043-00
U575	156-0411-00			MICROCIRCUIT, DI:QUAD-COMP, SGL SUPPLY	04713	MC3302P
U580	155-0056-00			MICROCIRCUIT, DI:SWEEP CONTROL	80009	155-0056-00
U585	156-0259-00			MICROCIRCUIT, LI:5 TRANSISTOR ARRAY	86684	CA3083
U590	156-0487-00			MICROCIRCUIT, LI:DUAL RETRIG, ONE SHOT	07263	96L02PC
U595	156-0112-00			MICROCIRCUIT, DI:QUAD 2-INPUT POS NAND GATE	01295	SN7426N
U600	156-0177-00			MICROCIRCUIT, LI:DUAL LINE RECEIVER	01295	SN75107AN
U605	156-0158-00			MICROCIRCUIT, LI:DUAL OPERATIONAL AMPLIFIER	80009	156-0158-00
U650	156-0305-04			MICROCIRCUIT, DI:PROG ROM	80009	156-0305-04
U665	156-0513-00			MICROCIRCUIT, DI:8-CHAN MUX	02735	CD4051AE
U670	156-0514-00			MICROCIRCUIT, DI :DIFF 4-CNAN MUX	02735	CD4052AE
U675	156-0158-00			MICROCIRCUIT, LI:DUAL OPERATIONAL AMPLIFIER	80009	156-0158-00

Ckt No.	Tektronix Part No	Serial/Model No. Eff	Dscont	Name & Description	Mfr Code	Mfr Part Number
T2060	120-1012-00			XFMR, RF:TOROID, 2 WINDINGS, TRIFILAR	80009	120-1012-00
U10	156-0366-00			MICROCIRCUIT, LI:DUAL D-TYPE F-F	80009	156-0366-00
U20	156-0366-00			MICROCIRCUIT, LI:DUAL D-TYPE F-F	80009	156-0366-00
U30	156-0366-00			MICROCIRCUIT, LI:DUAL D-TYPE F-F	80009	156-0366-00
U40	156-0683-00			MICROCIRCUIT, DI:HEX. BUS RCVR	18324	8T37B
U50	156-0140-00			MICROCIRCUIT, DI:HEX BFR, 15V, TTL	01295	SN7417N
U145	156-0177-00			MICROCIRCUIT, LI:DUAL LINE RECEIVER	01295	SN75107AN
U160	156-0569-00			MICROCIRCUIT, DI:BCD COUNTER TI	01295	SN74LS190N
U165	156-0422-00			MICROCIRCUIT, DI:UP/DCWN SYNC BINARY COUNTER	80009	156-0422-00
U170	156-0508-00			MICROCIRCUIT, DI:QUAD R-S LATCH, TTL	01295	SN74279N
U175	156-0567-00			MICROCIRCUIT, DI:DUAL J-K NEG EDGE TRIG F-F	01295	SN74LS113N
U180	156-0506-00			MICROCIRCUIT, DI:QUAD SGL ENDED DUAL LINE D	27014	DM8831N
U185	156-0516-00			MICROCIRCUIT, LI:OPERATIONAL AMPLIFIER	24355	AD523J
U192	156-0047-00	B010100	B020274	MICROCIRCUIT, DI:TPL 3-INPUT POS NAND GATE	80009	156-0047-00
U192	156-0386-00	B020275		MICROCIRCUIT, DI:TRIPLE 3-INPUT NAND GATE	01295	SN74LS10N
U194	156-0567-00			MICROCIRCUIT, DI:DUAL J-K NEG EDGE TRIG F-F	01295	SN74LS113N
U195	156-0315-00			MICROCIRCUIT, DI:BCD +O BINARY CONV	01295	SN74184AN
U196	156-0506-00			MICROCIRCUIT, DI:QUAD SGL ENDED DUAL LINE D	27014	DM8831N
U198	156-0516-00			MICROCIRCUIT, LI:OPERATIONAL AMPLIFIER	24355	AD523J
U200	156-0079-00	BO10100	B020274	MICROCIRCUIT, DI:DECADE COUNTER, TTL	07263	9390PC
U200	156-0656-00	B020275		MICROCIRCUIT, DI:DECADE COUNTER	80009	156-0656-00
U0205	156-0117-00	B010100	B020274	MICROCIRCUIT, DI:SYNC 4-BIT BINARY COUNTER	01295	SN74161N
U205	156-0784-00	B020275		MICROCIRCUIT, DI:SYNC 4 BIT BINARY COUNTER	80009	156-0784-00
U210	156-0084-00	B010100	B020274	MICROCIRCUIT, DI:SYNCHRONOUS DECADE COUNTER	07263	9310DC
U210	156-0788-00	B020275		MICROCIRCUIT, DI:SYNC 4-BIT CNTR W/SYNC CLEAR	80009	156-0788-00
U215	156-0084-00	B010100	B030639	MICROCIRCUIT, DI:SYNCHRONOUS DECADE COUNTER	07263	9310DC
0215	156-0788-00	B030640		MICROCIRCUIT, DI:SYNC 4-BIT CNTR W/SYNC CLEAR	80009	156-0788-00
0225	156-0517-00			MICROCIRCUIT, DI:DOUBLE BAL MIXER	01295	SN76514N
U230	156-0124-00			MICROCIRCUIT, DI:SGL FREQ/PHASE DETECTOR	80009	156-0124-00
U260	156-0177-00			MICROCIRCUIT, LI:DUAL LINE RECEIVER	01295	SN75107AN
U265	156-0041-00			MICROCIRCUIT, DI :DUAL D-TYPE FLIP-FLOP	27014	DM7474N
U270	156-0079-00			MICROCIRCUIT, DI:DECADE COUNTER, TTL	07263	9390PC
u305	156-0158-00			MICROCIRCUIT, LI:DUAL OPERATIONAL AMPLIFIER	80009	156-0158-00
U310	156-0077-00			MICROCIRCUIT, LI :OPERATIONAL AMPLIFIER	27014	LM301AH
U325	155-0108-00			MICROCIRCUIT , LI: OPERATIONAL AMPLIFIER	80009	155-0108-00
U335	156-0077-00			MICROCIRCUIT, LI:OPERATIONAL AMPLIFIER	27014	LM301AH
U340	155-0108-00			MICROCIRCUIT, LI:OPERATIONAL AMPLIFIER	80009	155-0108-00
U345	156-0077-00			MICROCIRCUIT, LI:OPERATIONAL AMPLIFIER	27014	LM301AH
U375	156-0067-00			MICROCIRCUIT, LI:OPERATIONAL AMPLIFIER	80009	156-0067-00
U395	156-0626-00			MICROCIRCUIT, DI:DUAL DECADE CNTR	01295	SN74390N
U510	156-0503-00			MICROCIRCUIT, DI :HEX INVERTER BUFFER	80009	156-0503-00
U515	156-0463-28	B010100	B010134	MICROCIRCUIT DI:8-BIT PROGRAMMABLE ROM	80009	156-0463-28
U515	156-0726-00	B010135		MICROCIRCUIT, DI:ROM U2265 PROGRAMMED	80009	156-0726-00
U520	156-0683-00			MICROCIRCUIT, DI:HEX. BUS RCVR	18324	8T37B
U525	156-0547-00			MICROCIRCUIT, DI:QUAD TOI-INPUT MULTIPLEXER	80009	156-0547-00
U530	156-0350-00			MICROCIRCUIT, DI:QUAD 2-INPUT NAND GATE	02735	CD4WO11AE
U535	156-0349-00			MICROCIRCUIT, DI:QUAD 2-INPUT NOR GATE	80009	156-0349-00
U540	156-0548-00			MICROCIRCUIT, DI:FOUR-BIT MAGNITUDE COMPTR	80009	156-0548-00
U550	156-0144-00			MICROCIRCUIT, DI:3-INPUT POS NAND GATE	01295	SN7412N
U555	156-0186-00			MICROCIRCUIT, DI:QUAD 2-INPUT NAND GATE	01295	SN7403N
U560	156-0178-00			MICROCIRCUIT, DI:TRIPLE 3-INPUT NOR GATE	01295	SN7427N
U565	156-0403-00			MICROCIRCUIT, DI:HEX. INV W/OPEN COLL OUTPS	01295	SN74S05N

Ckt No.	Tektronix Part No	Serial/Model No. Eff	Dscont	Name & Description	Mfr Code	Mfr Part Number
U4000	156-0580-00			MICROCIRCUIT, DI:4 STAGE PRL IN-PRL OUT	02735	CD4035AE
U4005	156-0502-00			MICROCIRCUIT, DI:4 BIT ADDER	04713	MC1400BCP
U4010	156-0502-00			MICROCIRCUIT, DI:4 BIT ADDER	04713	MC1400BCP
U4015	156-0576-00			MICROCIRCUIT, DI:8 BIT PRL INP-SERIAL OUTPUT	04713	MC14021CP
U4020	156-0576-00			MICROCIRCUIT, DI:8 BIT PRL INP-SERIAL OUTPUT	04713	MC14021CP
U4025	156-0576-00			MICROCIRCUIT, DI:8 BIT PRL INP-SERIAL OUTPUT	04713	MC14021CP
U4030	156-0576-00			MICROCIRCUIT, DI:8 BIT PRL INP-SERIAL OUTPUT	04713	MC14021CP
U4035	156-0572-00			MICROCIRCUIT, DI:8 BIT SERIAL IN-PRL OUT	27014	MM74C164N
U4040	156-0502-00			MICROCIRCUIT, DI:4 BIT ADDER	04713	MC1400BCP
U4045	156-0502-00			MICROCIRCUIT, DI:4 BIT ADDER	04713	MC1400BCP
U4050	156-0366-00			MICROCIRCUIT, LI:DUAL D-TYPE F-F	61295	TP4013AN
U4055	156-0350-01			MICROCIRCUIT, DI:QUAD 2-INPUT NAND GATE	80009	156-0350-01
U4060	156-0525-00			MICROCIRCUIT, DI:DUAL J-K MASTER SLAVE F-F	02735	CD4027AE
U4065	156-0575-02			MICROCIRCUIT, DI:3 INPUT NOR GATE	27014	MM5625AN
U4070	156-0681-00			MICROCIRCUIT, DI:18 STAGE STATIC SHIFT RGTR	02735	CE4006AF
U4075	156-0350-01			MICROCIRCUIT, DI:QUAD 2-INPUT NAND GATE	80009	156-0350-01
U4080	156-0570-00			MICROCIRCUIT, LI:DUAL HIGH SPEED COMPARATOR	27014	LM319H
U4085	156-0570-00			MICROCIRCUIT, LI:DUAL HIGH SPEED COMPARATOR	27014	LM319H
U4100	156-0572-00			MICROCIRCUIT, DI:8 BIT SERIAL IN/PRL OUT	27014	MM74C164N
u4105	156-0580-00			MICROCIRCUIT, DI:4 STAGE PRL IN/PRL OUT	02735	CD4035AE
U4110	156-0350-01			MICROCIRCUIT, DI:QUAD 2-INPUT NAND GATE	80009	156-0350-01
U4115	156-0547-00			MICROCIRCUIT, DI:QUAD TOW-INPUT MULTIPLEXER	27014	MM74C157N
U4120	156-0579-00			MICROCIRCUIT, DI:DUAL 4-BIT BIN COUNTER	04713	MC14520CP
U4125	156-0579-00			MICROCIRCUIT, DI:DUAL 4-BIT BIN COUNTER	04713	MC14520CP
u4130	156-0579-00			MICROCIRCUIT, DI:DUAL 4-BIT BIN COUNTER	04713	MC14520CP
U4135	156-0579-00			MICROCIRCUIT, DI:DUAL 4-BIT BIN COUNTER	04713	MC14520CP
U4140	156-0576-00			MICROCIRCUIT, DI:8 BIT PRL INP-SERIAL OUTPUT	04713	MC14021CP
U4145	156-0580-00			MICROCIRCUIT, DI:4 STAGE PRL-IN-PRL OUT	02735	CD4035A3
U4150	156-0580-00			MICROCIRCUIT, DI:4 STAGE PRL-IN-PRL OUT	02735	CD4035A3
U4155	156-0494-00			MICROCIRCUIT, DI:HEX INVERTER/BUFFER	02735	CD4049AE
U4160	156-0578-00			MICROCIRCUIT, DI:DUAL 1 SHOT MULTIVIBRATOR	04713	MC14528CP
U4170	156-0575-02			MICROCIRCUIT, DI:3 INPUT NOR GATE	27014	MM5625AN
U4175	156-0525-00			MICROCIRCUIT, DI:DUAL J-K MASTER SLAVE F-F	02735	CD4027AE
U4180	156-0349-00	B010100	B030322	MICROCIRCUIT, DI:QUAD 2-INPUT NOR GATE	02735	CD4001AE
U4180	156-0349-01	B030323		MICROCIRCUIT, DI:QUAD 2-INPUT NOR GATE	80009	156-0349-01
U4504	156-0509-00			MICROCIRCUIT, DI:DIGITAL TO ANALOG CONV	80009	156-0509-00
U4506	156-0583-00			MICROCIRCUIT, DI:SUCCESSIVE APPROX REGISTER	04713	MC14559CP
U4508	156-0570-00			MICROCIRCUIT, LI:DUA L HIGH SPEED COMPARATOR	27014	LM319H
U4510	156-0366-00			MICROCIRCUIT, LI:DUAL D-TYPE F-F	01295	TP4013AN
U4514	156-0575-00			MICROCIRCUIT, DI:DUAL J-K MASTER SLAVE F-F	27014	MM5625AN
U4516	156-0350-00			MICROCIRCUIT, DI:QUAD 2-INPUT NAND GATE	02735	CD4011AE
U4522	156-0158-00			MICROCIRCUIT, LI:DUAL OPERATIONAL AMPLIFIER	80009	156-0158-00
U4524-1	156-0158-00			MICROCIRCUIT, LI:DUAL OPERATIONAL AMPLIFIER	80009	156-0158-00
U4525-2	156-0158-00			MICROCIRCUIT, LI:DUAL OPERATIONAL AMPLIFIER	80009	156-0158-00
U4540-1	156-0158-00			MICROCIRCUIT, LI:DUAL OPERATIONAL AMPLIFIER	80009	156-0158-00
U4543-2	156-0158-00			MICROCIRCUIT, LI:DUAL OPERATIONAL AMPLIFIER	80009	156-0158-00
U4530	156-0680-00			MICROCIRCUIT, D I:DUAL J-K F-F W-CLEAR	27014	MM74C107N
U4532	156-0350-00			MICROCIRCUIT, DI:QUAD 2-INPUT NAND GATE	02735	CD4011AE
U4534	156-0350-00			MICROCIRCUIT, DI:QUAD 2-INPUT NAND GATE	02735	CD4011AE
U4536	156-0349-00			MICROCIRCUIT, DI:OUAD 2-INPUT NOR GATE	02735	CD4001AE
U4538	156-0578-00			MICROCIRCUIT, DI:3 INPUT NOR GATE	04713	MC14528CP
U4544	156-0515-00			MICROCIRCUIT, DI:TPL 3-CHAN MUX	02735	CD4053AE
U4546	156-0158-00			MICROCIRCUIT, LI:DUAL OPERATIONAL AMPLIFIER	80009	156-0158-00
U4548	307-0479-00			RES., FXD, FILM:40K OHM, 80K OHM, 78.5K OHM	80009	307-0479-00

Ckt No.	Tektronix Part No	Serial/Model No. Eff	Dscont	Name & Description	Mfr Code	Mfr Part Number
U2230	156-0349-00			MICROCIRCUIT, DI:QUAD 2-INPUT NOR GATE	80009	156-0349-00
U2235	155-0118-00			MICROCIRCUIT, DI:VERT CONTROL	80009	155-0118-00
U2240	156-0140-00			MICROCIRCUIT, DI:HEX BFR, 15V, TTL	01295	SN7417N
U2245	156-0093-00			MICROCIRCUIT, DI:HEX.INVERTER	01295	SN7416N
U2250	156-0683-00			MICROCIRCUIT, DI:HEX. BUS RCVR	18324	8T37B
U2265	156-0463-29	B010100	B010134	MICROCIRCUIT, DI:8 BIT PROGRAMMABLE ROM	80009	156-0463-29
U2265	156-0725-00	B010135		MICROCIRCUIT, DI:ROM U515 PROGRAMMED	80009	156-0725-00
U2320	156-0186-00			MICROCIRCUIT, DI:QUAD 2-INPUT NAND GATE	01295	SN7403N
U3000	156-0267-00			MICROCIRCUIT, DI:8-INPUT NAND GATE	01295	SN74L30N
U3005	156-0131-00			MICROCIICUIT, DI:8-BIT SER TO PARALLEL SHF	80009	156-0131-00
U3010	156-0075-00			MICROCIRCUIT, DI:SGL 8-BIT DATA SEL MUX	80009	156-0075-00
U3015	156-0197-00			MICROCIRCUIT, LI:5 TRANSISTOR ARRAY	80009	156-0197-00
W4000	156-0580-00			MICROCIRCUIT, DI:4 STAGE PRL IN-PRL OUT	02735	CD4035AE
U4005	156-0502-00			MICROCIRCUIT, DI:4 BIT ADDER	80009	156-0502-00
WO410	156-0502-00			MICROCIRCUIT, DI:4 BIT ADDER	80009	156-0502-00
14015	156-0576-00			MICROCIRCUIT, DI:8 BIT PRL INP-SERIAL OUTPT	04713	MC14021CP
U4020	156-0576-00			MICROCIRCUIT, DI:8 BIT PRL INP-SERIAL OUTPT	04713	MC14021CP
U4025	156-0576-00			MICROCIRCUIT, DI:8 BIT PRL INP-SERIAL OUTPT	04713	MC14021CP
U4030	156-0576-00			MICROCIRCUIT, DI:8 BIT PRL INP-SERIAL OUTPT	04713	MC14021CP
U4035	156-0572-00			MICROCIRCUIT, DI:8 BIT SERIAL IN-PRL OUT	80009	156-0572-00
U4040	156-0502-00			MICROCIRCUIT, DI:4 BIT ADDER	80009	156-0502-00
U4045	156-0502-00			HICROCIRCUIT, DI:4 BIT ADDER	80009	156-0502-00
U4050	156-0366-00			MICROCIRCUIT, LI:DUAL D-TYPE F-F	80009	156-0366-00
04055	156-0350-01			MICROCIRCUIT, DI:QUAD 2-INPUT HAND GATE	80009	156-0350-01
U4060	156-0525-00			MICROCIRCUIT, DI:DUAL J-K MASTER SLAVE F-F	80009	156-0525-00
U4065	156-0575-02			MICROCIRCUIT, DI:3 INPUT NOR GATE	27014	MM5625AN
W4070	156-0681-00			MICROCIRCUIT, DI:18 STAGE STATIC SHIFT RGTR	02735	CD4006AF
U4075	156-0350-01			MICROCIRCUIT, DI:QUAD 2-INPUT NAND GATE	80009	156-0350-01
U4080	156-0570-00			MICROCIRCUIT, LI:DUAL HIGH SPEED COMPARATOR	27014	LM319H
U4085	156-0570-00			MICROCIRCUIT, LI:DUAL HIGH SPEED COMPARATOR	27014	LM319H
U4100	156-0572-00			MICROCIRCUIT, DI:8 BIT SERIAL IN-PRL OUT	80009	156-0572-00
04105	156-0580-00			MICROCIRCUIT, DI:4 STAGE PRL IN-PRL OUT	02735	CD4035AE
U4110	156-0350-01			MICROCIRCUIT, DI:QUAD 2-INPUT NAND GATE	80009	156-0350-01
U4115	156-0547-00			MICROCIRCUIT, DI:QUAD TOW-INPUT MULTIPLEXER	80009	156-0547-00
U4120	156-0579-00			MICROCIRCUIT, DI:DUAL 4-BIT BIN COUNTER	04713	MC14520CP
U4125	156-0579-00			MICROCIRCUIT, DI:DUAL 4-BIT BIN COUNTER	04713	MC14520CP
U4130	156-0579-00			MICROCIRCUIT, DI:DUAL 4-BIT BIN COUNTER	04713	MC14520CP
U4135	156-0579-00			MICROCIRCUIT, DI:DUAL 4-BIT BIN COUNTER	04713	MC14520CP
U4140	156-0576-00			MICROCIRCUIT, DI:8 BIT PRL INP-SERIAL OUTPT	04713	MC14021CP
U4145	156-0580-00			MICROCIRCUIT, DI:4 STAGE PRLIN-PRL OUT	02735	CD4035AE
U4150	156-0580-00			MICROCIRCUIT, DI:4 STAGE PRL IN-PRL OUT	02735	CD4035AE
U4155	156-0494-00			MICROCIRCUIT, DI:HEX INVERTER/BUFFER	80009	156-0494-00
U4160	156-0578-00			MICROCIRCUIT, DI:DUAL 1 SHOT MULTIVIBRATOR	04713	MC14528CP
U4170	156-0575-02			MICROCIRCUIT, DI:3 INPUT NOR GATE	27014	MM5625AN
U4175	156-0525-00			MICROCIRCUIT, DI:DUAL J-K MASTER SLAVE F-F	80009	156-0525-00
U4180	156-0349-00	B010100	B030322	MICROCIRCUIT, DI:QUAD 2-INPUT NOR GATE	80009	156-0349-00
U4180	156-0349-01	B300323		MICROCIRCUIT, DI:QUAD 2-INPUT NOR GATE	80009	156-0349-01
U4504	156-0509-00			MICROCIRCUIT, DI DIGITAL TO ANALOG CONV	80009	156-0509-00
U4506	156-0583-00			MICROCIRCUIT, DI:SUCCESSIVE APPROX REGISTER	04713	MC14559CP
U4508	156-0570-00			MICROCIRCUIT, LI:DUAL HIGH SPEED COMPARATOR	27014	LM319H
U4510	156-0366-00			MICROCIRCUIT, LI:DUAL D-TYPE F-F	80009	156-0366-00
U4514	156-0575-00			MICROCIRCUIT, DI:3 INPUT NOR GATE	80009	156-0575-00
U4516	156-0350-00			MICROCIRCUIT, DI:QUAD 2-INPUT NAND GATE	02735	CD4011AE

Ckt No.	Tektronix Part No	Serial/Model No. Eff	Dscont	Name & Description	Mfr Code	Mfr Part Number
W1505	175-1667-00			CABLE ASSY, ELEC:	80009	175-1667-00
Y390	119-0499-00			OSCILIATOR, RF:10 MHZ	27802	CO-232T
Y1504	158-0102-00			XTAL UNIT, QTZ:10.45 MHZ, 0.002%	80009	158-0102-00
Y19502						
Y19521						
Y1954	158-0094-02					
				XTAL UNIT SET: (4) MATCHED	80009	158-0094-02
Y1956						

Ckt No.	Tektronix Part No	Serial/Model No. Eff	Dscont	Name & Description	Mfr Code	Mfr Part Number
VR3004	152-0508-00			SEMICOND DEVICE:ZENER, 0.4W, 12.6V, 5%	80009	152-0508-00
VR4575	152-0166-00			SEMICOND DEVICE:ZENER, 0.4W, 6.2V, 5%	81483	69-9035
VR4600	152-0280-00			SEMICOND DEVICE:ZENER, 0.4W, 6.2V, 5%	80009	152-0280-00
VR4636	152-0278-00			SEMICOND DEVICE:ZENER, 0.4W, 3V, 5%	07910	1N4372A
VR4646	152-0149-00			SEMICOND DEVICE:ZENER, 0.4W, 10V, 5%	04713	1N961B
W200	175-1670-00			CABLE ASSY, ELEC:	80009	175-1670-00
W230	175-1675-00			CA ASSY, SP, ELEC:50 OHM COAX, 7.75 INCH LONG	80009	175-1675-00
W380	175-1672-00			CABLE ASSY, ELEC:	80009	175-1672-00
W385	175-1674-00			CABLE ASSY, ELEC:	80009	175-1674-00
W390	175-1673-00			CABLE ASSY, ELEC:	80009	175-1673-00
W1040	175-1669-00			CA ASSY, SP, ELEC:10.7 MHZ TO OSC BUFFER	80009	175-1669-00
W1500	175-1666-00			CA ASSY, SP, ELEC:2ND LO TO REFOSC	80009	175-1668-00
W1505	175-1667-00			CA ASSY, SP, ELEC:2ND LO TO REFOSC	80009	175-1667-00
Y390	119-0499-00			OSCILLATOR, RF:10 MHZ	27802	CO-232T
Y1504	158-0102-00			XTAL UNIT, QTZ:10.45 MHZ, 0.002%	13571	TEK 158-0102-00
Y1950						
Y1952						
Y1954	158-0094-02			XTAL UNIT SET: (4) MATCHED	80009	158-0094-02
Y1956						

PART NUMBER - NATIONAL STOCK NUMBER CROSS REFERENCE INDEX

PART NUMBER	FSCM	NATIONAL STOCK NUMBER	REPLACEMENT PART NUMBER	REPLACEMENT FSCM	REPLACEMENT NATIONAL STOCK NUMBER
BB1015	01121	5905-00-237-6192			
BB1025	01121		RCR05G103JS	81349	5905-01-035-5065
BB1045	01121		RCR05G104JS	81349	5905-00-458-9346
BB1055	01121		RCR05G105JS	81349	5905-00-195-4074
BB1625	01121	5905-00-006-5924			
BB1835	01121		RCR05G183JS	81349	5905-00-112-3776
BB2025	01121	5905-00-961-7791			
BB2035	01121	5905-00-958-3830			
BB2225	01121		RCR05G222JS	81349	5905-00-401-7424
BB3005	01121	5905-00-420-7126			
BB3015	01121	5905-00-420-7128			
BB3025	01121		RCR05G302JS	81349	5905-00-421-8918
BB3035	01121	5905-00-472-0641			
BB4R705	01121	5905-00-422-3796	RCR05G4R7JS	81349	5905-00-422-3796
BB4705	01121	5905-00-900-1138			
BB5105	01121	5905-00-856-9865			
BB5125	01121	5905-00-958-3832			
BB5135	01121		RCR05G513JS	81349	5905-00-180-8314
BB5645	01121		RCR05G564JS	81349	5905-00-412-4047
CA3046	86684	5962-00-412-1023	CA3046	54590	5962-00-412-1023
CB1005	01121	5905-00-960-0099			
CB1015	01121	5905-00-102-5294			
CB1025	01121	5905-00-097-9533			
CB1035	01121	5905-00-909-3885			
CB1045	01121	5905-00-959-1202			
CB1125	01121	5905-00-577-9477			
CB1135	01121	5905-00-989-3753			
CB1235	01121	5905-00-989-7943			
CB1335	01121	5905-00-911-3792			
CB1515	01121	5905-00-577-9598			
CB1525	01121	5905-00-990-5559			
CB1535	01121	5905-00-904-5689			
CB1625	01121		RCR07G162JS	81349	5905-00-106-1248
CB1635	01121	5905-00-905-6278			
CB1815	01121	5905-00-097-9534			
CB1835	01121	5905-00-911-3801			
CB1855	01121	5905-00-800-8068			
CB2005	01121		RCR07G200JS	81349	5905-00-135-3972
CB2015	01121	5905-00-909-3919			
CB2025	01121	5905-00-102-5289			
CB2035	01121	5905-00-106-9356			
CB2205	01121	5905-00-989-2843			
CB2225	01121	5905-00-909-3940			
CB2235	01121	5905-00-911-3810			
CB2265	01121	5905-00-402-4242			
CB2405	01121	5905-00-442-9356	RCR07G240JS	81349	5905-00-542-7735
CB2425	01121	5905-00-542-7735			
CB2435	01121		RCR07G243JS	81349	5905-00-141-1295
CB27G5	01121	5905-00-909-1672			
CB2725	01121	5905-00-882-2723			
CB2735	01121	5905-00-911-3815			
CB2745	01121	5905-00-911-3819			
CB2755	01121		RCR07G275JS	81349	5905-00-104-8371
CB3015	01121	5905-00-686-3122			
CB3025	01121	5905-00-577-9453			
CB3035	01121	5905-00-909-3954			
CB3305	01121	5905-00-915-3152			
CB3315	01121	5905-00-909-3965			
CB3325	01121	5905-00-716-4841			
CB3335	01121	5905-00-909-3967			
CB3915	01121		RCR07G391JS	81349	5905-00-121-9932
CB3925	01121	5905-00-577-9459			

PART NUMBER - NATIONAL STOCK NUMBER CROSS REFERENCE INDEX

PART NUMBER	FSCM	NATIONAL STOCK NUMBER	PART NUMBER	FSCM	NATIONAL STOCK NUMBER
CB3935	01121	5905-00-907-4119			
CB4315	01121	5905-00-766-9392			
CB4325	01121	5905-00-909-3796			
CB4705	01121	5905-00-802-6730			
CB4715	01121	5905-00-911-3752			
CB4725	01121	5905-00-911-3753			
CB4735	01121	5905-00-960-0126			
CB4745	01121	5905-00-909-3815			
CB4755	01121	5905-00-498-6062			
CB51G5	01121	5905-00-472-6502			
CB5105	01121	5905-00-909-3834			
CB5115	01121	5905-00-577-9484			
CB5125	01121	5905-00-911-3754			
CB5615	01121	5905-00-105-7768			
CB5625	01121		RCR07G243JS	81349	5905-00-141-0744
CB62G5	01121	5905-00-465-0335	RCR07G6R2JS	81349	5905-00-465-0335
CB6205	01121	5905-00-577-9679			
CB6215	01121		RCR07G621JS	81349	5905-00-136-3891
CB6225	01121	5905-00-577-9487			
CB6815	01121	5905-00-577-9492			
CB6825	01121	5905-00-577-9455			
CB6835	01121	5905-00-716-4852			
CB7505	01121		RCR07G750JS	81349	5905-00-106-9357
CB7525	01121	5905-00-911-3779			
CB7535	01121	5905-00-916-7268			
CB8215	01121	5905-00-918-6522			
CB8225	01121	5905-00-989-1969			
CB9105	01121	5905-00-919-5708			
CB9125	01121		RNC65H3400BS	81349	5905-00-359-4133
CB9135	01121	5905-00-904-5672			
CD12676	07910	5961-00-858-5686			
CD4001AE	02735	5962-00-169-4730			
CD4011AE	02735	5962-00-169-4727			
CEATO-100OF	75042	5905-00-893-1290			
CEATO-1001F	75042	5905-00-904-4408			
CEATO-1002F	75042	5905-00-904-4409			
CEATO-1003F	75042	5905-00-484-7475			
CEATO-1004F	75042	5905-01-034-7930			
CEATO-1021F	75042	5905-00-105-7711			
CEATO-1052F	75042	5905-00-200-9763			
CEATO-1102F	75042	5905-01-484-7849			
CEATO-1134F	75042	5905-01-015-1659			
CEATO-1151F	75042	5905-00-153-4434			
CEATO-1211F	75042	5905-00-914-0101			
CEATO-1301F	75042	5905-00-724-5713			
CEATO-1403F	75042	5905-00-409-7199			
CEATO-1432F	75042	5905-00-233-4211			
CEATO-1433F	75042	5905-00-409-9880			
CEATO-1500F	75042	5905-00-917-0576			
CEATO-1502F	75042	5905-00-212-3533			
CEATO-1503F	75042	5905-00-994-8458			
CEATO-1582F	75042	5905-00-456-4213			
CEATO-1583F	75042	5905-00-498-2103			
CEATO-1623F	75042	5905-00-445-6339			
CEATO-1653F	75042	5905-00-256-9847	CEATO-1653F	07716	5905-00-256-9847
CEATO-1783F	75042	5905-00-118-7911			
CEATO-1872F	75042	5905-00-131-9772			
CEATO-2001F	75042	5905-00-922-9920			
CEATO-2002F	75042	5905-00-089-1548			
CEATO-2051F	75042	5905-00-724-5717			
CEATO-2151F	75042	5905-00-974-6073			
CEATO-2152F	75042	5905-00-201-6937			
CEATO-2210F	75042	5905-00-772-7038			
CEATO-2370F	75042	5905-00-122-3620			
CEATO-2490F	75042	5905-00-021-6493			
CEATO-2492F	75042	5905-00-118-7914			
CEATO-2493F	75042	5905-00-051-1879			

PART NUMBER - NATIONAL STOCK NUMBER CROSS REFERENCE INDEX

PART NUMBER	FSCM	NATIONAL STOCK NUMBER	PART NUMBER	FSCM	NATIONAL STOCK NUMBER
CEATO-2551F	75042	5905-00-998-1810			
CEATO-2552F	75042	5905-00-498-5748			
CEATO-2613F	75042	5905-00-139-9564			
CEATO-2872F	75042	5905-00-200-1255			
CEATO-2940F	75042	5905-00-402-1312			
CEATO-3011F	75042	5905-00-904-4410			
CEATO-3012F	75042	5905-01-017-8107			
CEATO-3013F	75042	5905-00-994-8492			
CEATO-3161F	75042	5905-00-914-0100			
CEATO-3242F	75042	5905-00-069-2402			
CEATO-3571F	75042	5905-00-403-3871			
CEATO-3651F	75042	5905-00-998-1793			
CEATO-3742F	75042	5904-00-441-7812			
CEATO-3921F	75042	5905-00-764-2042			
CEATO-3923F	75042	5905-00-456-4215			
CEATO-4021F	75042	5904-00-922-9923			
CEATO-4322F	75042	5905-00-877-5769			
CEATO-4421F	75042	5905-00-724-5766			
CEATO-4423F	75042	5905-00-420-8587			
CEATO-4531F	75042	5904-00-456-4216			
CEATO-4640F	75042	5905-00-974-6075			
CEATO-4752F	75042	5905-00-212-3537			
CEATO-4872F	75042	5905-00-078-1550			
CEATO-4991F	75042	5905-00-922-9925			
CEATO-4992F	75042	5905-00-434-9087			
CEATO-4993F	75042	5905-00-021-6497			
CEATO-5111F	75042	5905-00-426-7791			
CEATO-5112F	75042	5905-00-494-4628			
CEATO-5901F	75042	5905-00-498-2102			
CEATO-6340F	75042	5905-00-135-8509			
CEATO-6810F	75042	5905-00-493-1100			
CEATO-7152F	75042	5905-00-139-2260			
CEATO-7501F	75042	5905-00-994-8526			
CEATO-7502F	75042	5905-00-724-5769			
CEATO-8250F	75042	5905-00-212-3541	CEATO-8250F	07716	5905-00-212-3541
CEATO-8252F	75042	5905-00-729-6598			
CEATO-8451F	75042	5905-00-424-9770	CEATO-8451F	07716	5905-00-424-9770
CEATO-8660F	75042	5905-00-138-7343			
CEATO-8661F	75042	5905-00-456-4218			
CEATO-8662F	75042	5905-00-724-5730			
CEATO-9090F	75042	5909-00-772-2736			
CEATO-9091F	75042	5905-00-913-7121			
CEATO-9310F	75042	5905-00-852-8727			
CEATO-9761F	75042	5905-00-021-6503			
CEAT2-8451C	75042	5905-00-232-3085			
CEAT9-4101B	75042	5905-00-257-1081			
CEAT9-4951C	75042	5905-00-832-8199			
DM8831N	27014	5962-00-318-6252			
D155F3750F0	00853	5910-00-551-9377			
EB5625	01121	5905-00-121-9110			
FD7003	13715	5961-00-923-9773			
FN815	17856	5961-00-110-9356			
LM301AM	27014	5962-00-563-1929			
LM324N	27014	5962-01-008-4826	LM124D	27014	5962-01-008-4826
MC10131L	04713	5962-00-172-4913			
MC1648P	04713	5962-00-398-0866			
MPS6523	04713	5961-00-106-5179			
SN7403N	01295	5962-00-185-6629			
SN74161N	01295	5962-00-327-1155			
SN74164N	01295	5962-00-263-2195			
SN7417N	01295	5962-00-167-3474			
SN7426N	01295	5962-00-400-9165			
SN7427N	01295	5962-00-272-9506			
SN74279N	01295	5962-00-276-9944			
SN75107AN	01295	5962-00-400-8993			
SSL-12	08806	5961-00-368-2298			

PART NUMBER - NATIONAL STOCK NUMBER CROSS REFERENCE INDEX

PART NUMBER	FSCM	NATIONAL STOCK NUMBER	PART NUMBER	FSCM	NATIONAL STOCK NUMBER
TDC106M025NLF	90201	5910-01-033-1391			
TDC156M020NLF	90201	5910-01-011-1146	196D156X9020KA1	56289	5910-01-011-1146
U1491	15818	5961-00-401-6659			
VTL-2C4	18178	5961-01-012-9214			
1N4152	07910	5961-00-899-8924			
1N4372A	07910	5961-00-903-2990			
1N755A	04713	5961-00-068-2000			
1N961B	04713	5961-00-883-1924			
108-0240-00	80009	5950-00-835-6417			
108-0420-00	80009	5950-00-472-0426			
108-0551-00	80009	5950-00-234-0811			
108-0598-00	80009	5950-00-236-8021			
114-0200-00	80009	5920-00-406-6294			
1214-05-00-0541C	78189	5310-00-193-6731			
131-0344-00	80009	5935-00-879-8328			
131-0590-00	80009	5999-00-551-9434			
131-0591-00	80009	5940-01-020-0592			
131-0608-00	80009	5999-00-551-9433			
131-0707-00	80009	5999-00-396-6331			
136-0252-04	80009	5999-00-257-9041			
136-0387-00	80009	5935-00-359-8926			
150-1004-00	80009	5961-00-368-2298			
150D156X0020B2	56289	5910-00-815-5118			
150D157X0015S2	56289	5910-00-688-7211			
150D476X0006B2	56289	5910-00-752-4185			
151-0188-00	80009	5961-00-931-0372			
151-0190-00	80009	5961-00-892-8706			
151-0216-00	80009	5961-00-350-2246			
151-0441-00	80009	5961-01-005-9744			
151-1005-00	80009	5961-00-118-4773	2N4302	80131	5961-00-118-4773
151-1006-00	80009	5961-00-401-6659			
151-1012-00	80009	5961-00-118-1092	2N4416A	80131	5961-00-118-1092
151-1021-00	80009	5961-00-247-8017			
152-0075-00	80009	5961-00-908-7598			
152-0149-00	80009	5961-00-883-1924			
152-0153-00	80009	5961-00-923-9773			
152-0166-00	80009	5961-00-936-7720			
152-0195-00	80009	5961-00-936-7719			
152-0278-00	80009	5961-00-903-2990	JAN1N4372A	81349	5961-00-903-2990
152-0280-00	50009	5961-00-436-2890			
152-0322-00	80009	5961-00-479-7329			
152-0508-00	80009	5961-01-005-9751			
152-0612-00	80009	5961-01-012-6695			
155-0035-00	80009	5962-00-236-8592			
155-0056-00	80009	5962-00-501-1758			
156-0158-00	80009	5962-01-005-9712			
156-0277-00	80009	5962-00-365-5977			
196D336X0010KA1	56289	5910-00-007-0803			
2X20224-402	73743	5310-00-158-5262			
210-0046-00	80009	5310-00-8L1-8117			
210-0259-00	80009	5940-00-471.-9824			
210-0583-00	80009	5310-00-006-8168			
210-0586-00	80009	5310-00-836-3520			
211-0007-00	80009		MS35206-212	96906	5305-00-993-0191
211-0008-00	80009		MS35206-213	96906	5305-00-889-3116
211-0101-00	80009	5305-00-492-2145			
211-0105-00	80009	5305-00-841-8060			
211-0116-00	80009	5305-00-005-8245			
211-0507-00	80009	5305-00-005-0795			
213-0153-00	80009	5305-00-283-1909			
214-0579-00	80009	5940-00-935-8313			
214-1127-00	80009	3110-00-442-8406			
260-0960-01	80009	5930-00-368-1354			
274C3	56289	5910-00-409-1711			
276-0507-00	80009	6625-00-082-7547			
281-0158-00	80009	5910-00-378-0354			
281-0504-00	80009	5910-00-577-1315			
281-0523-00	80009	5910-00-713-2011			

PART NUMBER - NATIONAL STOCK NUMBER CROSS REFERENCE INDEX

PART NUMBER	FSCM	NATIONAL STOCK NUMBER	PART NUMBER	FSCM	NATIONAL STOCK NUMBER
281-0525-00	80009	5910-00-682-3251			
281-0536-00	80009	5910-00-810-3819			
281-0544-OO00	80009	5910-00-725-1700			
281-0551-00	80009	5910-00-983-3977			
281-0579-00	80009	5910-00-947-9500			
281-0604-00	80009	5910-00-064-9433			
281-0605-00	80009	5910-00-913-9920			
281-0617-00	80009	5910-00-860-8529			
281-0629-00	80009	5910-00-436-4428			
281-0637-00	80009	5910-00-436-4751			
2829-75-4	98159	5975-00-937-6691			
283-0000-00	80009	5910-00-688-8702			
283-0003-00	80009	5910-00-801-1005			
283-0005-00	80009	5910-00-732-0188			
283-0023-00	80009	5910-00-914-3326			
283-0026-00	80009	5910-00-954-9055			
283-0032-00	80009	5910-00-113-2375			
283-0051-00	80009	5910-00-900-1209			
283-0065-00	80009	5910-00-465-4042			
283-0103-00	80009	5910-00-485-4854			
283-0111-00	80009	5910-00-436-7154			
283-0114-00	80009	5910-00-071-7369			
283-0156-00	80009	5910-00-001-7570			
283-0159-00	80009	5910-00-190-0138			
283-0167-00	80009	5910-00-615-6297			
283-0177-00	80009	5910-00-451-3206			
283-0178-00	80009	5910-00-451-5671			
283-0180-00	80009	5910-00-451-3205			
283-0191-00	80009	5910-00-001-7572			
283-0197-00	80009	5910-01-013-2369			
283-0198-00	80009	5910-00-481-3173			
283-0203-00	80009	5910-00-372-0582			
283-0204-00	80009	5910-00-488-9888			
283-0220-00	80009	5910-00-372-0584			
283-0604-00	80009	5910-00-064-9433			
283-0634-00	80009	5910-00-153-7920			
283-0670-00	80009	5910-00-551-9377			
290-0114-00	80009	5910-00-752-4185			
290-0135-00	80009	5910-00-436-5365			
290-0425-00	80009	5910-00-500-9676			
290-0512-00	80009	5910-00-361-8667			
290-0532-00	80009	5910-00-549-0398			
301-050C0GO210J	72982	5910-00-947-9500			
307-0106-00	80009	5905-00-126-6705	RCR20G4R7JS	1349	905-00-126-6705
307-0113-00	80009	5905-00-472-6502			
311-1259-00	80009	5905-00-434-5415			
311-1263-00	80009	5905-00-048-6793			
311-1266-00	80009	5905-01-012-3765			
311-1267-00	80009	5905-00-369-7639			
311-1268-00	80009	5905-00-566-3797			
311-1280-00	80009	5905-00-553-8796			
315-0100-00	80009	5905-00-434-5438			
315-0101-00	80009	5905-00-102-5294			
315-0102-00	80009	5905-00-434-5439			
315-0104-00	80009	5905-00-434-5443			
315-0105-00	80009		RCR07G153JS	81349	5905-OO00-116-8554
315-0112-00	80009	5905-00-445-3781			
315-0121-00	80009	5905-00-445-3804			
315-0123-00	80009	5905-00-445-3826			
315-0131-00	80009	5905-00-445-3827			
315-0133-00	80009	5905-00-445-3828			
315-0151-00	80009	5905-00-577-9598			
315-0153-00	80009		RCR07G153JS	81349	5905-00-116-8555
315-0162-00	80009	5905-00-445-3705			
315-0163-00	80009	5905-00-445-3706			
315-0181-00	80009	5905-00-445-3707			
315-0182-00	80009	5905-00-114-5343			

PART NUMBER - NATIONAL STOCK NUMBER CROSS REFERENCE INDEX

PART NUMBER	FSCM	NATIONAL STOCK NUMBER	PART NUMBER	FSCM	NATIONAL STOCK NUMBER
315-0200-00	80009	5905-00-445-3709			
315-0201-00	80009	5905-00-445-3714			
315-0202-00	80009	5905-00-445-3739			
315-0222-00	80009	5905-00-436-9299			
315-0240-00	80009	5905-00-442-9356			
315-0242-00	80009	5905-00-436-9764			
315-0270-00	80009		RCR07G27WJS	81349	5905-00-113-4860
315-0272-00	80009	5905-00-436-9832			
315-0273-00	80009	5905-00-436-9839			
315-0274-00	80009	5905-00-436-9864			
315-0301-00	80009	5905-00-437-0875			
315-0302-00	80009	5905-00-464-1958			
315-0303-00	80009		RCR07G303JS	81349	5905-00-121-9920
315-0331-00	80009	5905-00-437-0883			
315-0332-00	80009	5905-00-496-9488			
315-0333-00	80009	5905-00-496-9490			
315-0392-00	80009	5905-00-436-9924			
315-0431-00	80009	5905-00-445-3863			
315-0470-00	80009	5905-00-437-0891			
315-0471-00	80009	5905-00-436-9952			
315-0472-00	80009		RCR070472JS	81349	5905-00-114-0711
315-0473-00	80009	5905-00-437-0164			
315-0510-00	80009		RCR07G510JS	81349	5905-00-106-1249
315-0511-00	80009	5905-00-437-0282			
315-0512-00	80009	5905-00-437-0283			
315-0513-00	80009		RCR07G513JS	81349	5905-00-136-3890
315-0561-00	80009	5905-00-437-0288			
315-0562-00	80009	5905-00-437-0423			
315-0681-00	80009	5905-00-577-9492			
315-0682-00	80009		RCR070682JS	81349	5905-00-110-7622
315-0683-00	80009	5905-00-496-9491			
315-0752-00	80009	5905-00-437-0921			
315-0821-00	80009	5905-00-437-0936			
315-0910-00	80009	5905-00-437-0887			
317-0047-00	80009	5905-00-420-7401			
317-0510-00	80009	5905-00-856-9865			
321-0068-00	80009	5905-00-437-1696			
321-0114-00	80009	5905-00-405-7804			
321-0154-00	80009	5905-00-434-5045			
321-0155-00	80009	5905-00-441-7814			
321-0171-00	80009	5905-00-405-7794			
321-0189-UO	80009	5905-00-405-7972			
321-0193-00	80009	5905-00-434-5059			
321-0201-00	80009	5905-00-434-5053			
321-0204-00	80009	5905-00-724-5713			
321-0216-00	80009	5905-00-426-7701			
321-0222-00	80009	5905-00-426-7707			
321-0231-00	80009	5905-00-021-6494			
321-0237-00	80009	5905-00-426-7760			
321-0239-00	80009	5905-00-426-7740			
321-0260-00	80009	5905-00-426-7788			
321-0261-00	80009	5905-00-426-7791			
321-0285-00	80009	5905-00-913-7121			
321-0289-00	80009	5905-00-434-5068			
321-0321-00	80009	5905-00-981-7513			
321-0327-00	80009	5905-00-426-7760			
321-0335-00	80009	5905-01-017-8107			
321-0338-00	80009	5905-00-069-2402			
321-0344-00	80009	5905-00-441-7812			
321-0385-00	80009	5905-00-426-7847			
321-0399-00	80009	5905-00-472-7238			
321-0406-00	80009	5905-00-256-9847			
321-0431-00	80009	5905-00-445-3863			
321-0452-00	80009	5905-00-021-6497			
321-0486-00	80009	5905-01-015-1659			
323-0175-00	80009	5905-00-433-7805			
3329P-L58-202	80294	5905-00-625-9624			

PART NUMBER - NATIONAL STOCK NUMBER CROSS REFERENCE INDEX

PART NUMBER	FSCM	NATIONAL STOCK NUMBER	PART NUMBER	FSCM	NATIONAL STOCK NUMBER
348-0235-00	80009	5999-00-434-2894			
352-0157-00	80009	6250-00-476-0489			
352-0161-00	80009	5935-00-599-8831			
352-0163-00	80009	5935-00-599-8832			
352-0169-00	80009	5935-00-597-5054			
358-0241-00	80009	5365-00-003-4147			
366-0494-00	80009	5355-00-763-2993			
374-001COG0150K	72982	5910-00-860-8529			
380598-1	00779	5920-00-942-9927			
421837-9	88245	5935-00-879-8328			
4352-1-0318	71279	5935-00-359-8926	136-0387-00	80009	5935-00-359-8926
47352	22526	5940-01-020-0592			
47357	22526	5999-00-551-9433			
47439	22526	5999-00-396-6331			
5082-2672	28480	5961-00-479-7329			
518-000G7-45	72982	5910-00-378-0354			
57-0180-7D	78488	5950-00-001-7551			
62PT-349-0	73138	5905-01-012-3765			
69-6512	81483	5961-00-936-7719			
69-9035	81483	5961-00-936-7720			
70F102A1	76493	5950-00-057-0777			
805-505B102J	72982	5910-01-033-8432			
8121N058651103M	72982	5910-00-488-9888			
8121N075W5RL03M	72982	5910-00-372-0584			
8131N145COG332J	72982	5910-00-900-1209			
8131N147W5RL04K	72982	5910-00-615-6297			
855-547E103Z	72982	5910-00-801-1005			
86282-2	00779	5999-01-020-2591			

SECTION 9
REPLACEABLE
MECHANICAL PARTS

PARTS ORDERING INFORMATION

Replacement parts are available from or through your local Tektronix, Inc. Field Office or representative

Changes to Tektronix instruments are sometimes made to accommodate improved components as they become available, and to give you the benefit of the latest circuit improvements developed in our engineering department. It is therefore important, when ordering parts, to include the following information in your order. Part number. instrument type or number, serial number, and modification number If applicable

If a part you have ordered has been replaced with a new or improved part, your local Tektronix, Inc Field Office or representative will contact you concerning any change in part number.

Change information, if any. is located at the rear of this manual.

SPECIAL NOTES AND SYMBOLS

XOOO Part first added at this serial number

OOX Part removed after this serial number

FIGURE AND INDEX NUMBERS

Items in this section are referenced by figure and index numbers to the Illustrations.

INDENTATION SYSTEM

This mechanical parts list Is indented to indicate item relationships Following is an example of the indentation system used In the description column.

1 2 3 4 5 *Name & Description*

Assembly and/or Component
Attaching parts for Assembly and/or Component
- - - * - - -
Detail Part of Assembly and/or Component
Attaching parts for Detail Part
- - - * - - -
Parts of Detail Part
Attaching parts for Parts of Detail Part

Attaching Parts always appear in the same indentation as the Item it mounts, while the detail parts are indented to the right Indented items are part of, and included with, the next higher indentation The separation symbol - - - * - - - indicates the end of attaching parts **Attaching parts must be purchased separately, unless otherwise specified.**

ITEM NAME

In the Parts List, an Item Name is separated from the description by a colon (') Because of space limitations, an Item Name may sometimes appear as incomplete For further Item Name identification, the U S Federal Cataloging Handbook H6-1 can be utilized where possible

ABBREVIATIONS

"	INCH	ELCTRN	ELECTRON	IN	INCH	SE	SINGLE END
pr	NUMBER SIZE	ELEC	ELECTRICAL	INCAND	INCANDESCENT	SECT	SECTION
ACTR	ACTUATOR	ELCTLT	ELECTROLYTIC	INSUL	INSULATOR	SEMICOND	SEMICONDUCTOR
ADPTR	ADAPTER	ELEM	ELEMENT	INTL	INTERNAL	SHLD	SHIELD
ALIGN	ALIGNMENT	EPL	ELECTRICAL PARTS LIST	LPHLDR	LAMPHOLDER	SHLDR	SHOULDERED
AL	ALUMINUM	EOPT	EQUIPMENT	MACH	MACHINE	SKT	SOCKET
ASSEM	ASSEMBLED	EXT	EXTERNAL	MECH	MECHANICAL	SL	SLIDE
ASSY	ASSEMBLY	FIL	FILLISTER HEAD	MTG	MOUNTING	SLFLKG	SELF-LOCKING
ATTEN	ATTENUATOR	FLEX	FLEXIBLE	NIP	NIPPLE	SLVG	SLEEVING
AWG	AMERICAN WIRE GAGE	FLH	FLAT HEAD	NON WIRE	NOT WIRE WOUND	SPR	SPRING
BD	BOARD	FLTR	FILTER	OBD	ORDER BY DESCRIPTION	SO	SOUARE
BRKT	BRACKET	FR	FRAME or FRONT	OD	OUTSIDE DIAMETER	SST	STAINLESS STEEL
BRS	BRASS	FSTNR	FASTENER	OVH	OVAL HEAD	STL	STEEL
BRZ	BRONZE	FT	FOOT	PH BRZ	PHOSPHOR BRONZE	SW	SWITCH
BSHG	BUSHING	FXD	FIXED	PL	PLAIN or PLATE	T	TUBE
CAB	CABINET	GSKT	GASKET	PLSTC	PLASTIC	TERM	TERMINAL
CAP	CAPACITOR	HDL	HANDLE	PN	PART NUMBER	THD	THREAD
CER	CERAMIC	HEX	HEXAGON	PNH	PAN HEAD	THK	THICK
CHAS	CHASSIS	HEX HD	HEXAGONAL HEAD	PWR	POWER	TNSN	TENSION
CKT	CIRCUIT	HEX SOC	HEXAGONAL SOCKET	RCPT	RECEPTACLE	TPG	TAPPING
COMP	COMPOSITION	HLCPS	HELICAL COMPRESSION	RES	RESISTOR	TRH	TRUSS HEAD
CONN	CONNECTOR	HLEXT	HELICAL EXTENSION	RGD	RIGID	V	VOLTAGE
COV	COVER	HV	HIGH VOLTAGE	RLF	RELIEF	VAR	VARIABLE
CPLG	COUPLING	IC	INTEGRATED CIRCUIT	RTNR	RETAINER	W/	WITH
CRT	CATHODE RAY TUBE	ID	INSIDE DIAMETER	SCH	SOCKET HEAD	WSHR	WASHER
DEG	DEGREE	IDENT	IDENTIFICATION	SCOPE	OSCILLOSCOPE	XFMR	TRANSFORMER
DWR	DRAWER	IMPLR	IMPELLER	SCR	SCREW	XSTR	TRANSISTOR

CROSS INDEX MFR. CODE NUMBER TO MANUFACTURER

MFR.CODE	MANUFACTURER	ADDRESS	CITY, STATE, ZIP
0000A	LIMO USA	2015 2ND ST.	BERILEY, CA 94710
00779	AMP, INC.	P. O. BOX 3608	HARRISBURG, PA 17105
01295	TEXAS INSTRUMENTS, INC., SEMICONDUCTOR GROUP	P. O. BOX 5012	DALLAS, TX 75222
05574	VIKING INDUSTRIES, INC.	9324 TOPANGA CANYON BLVD.	CHATSWORTH, CA 91311
08261	SPECTRA-STRIP CORP.	7100 LAMPSON AVE.	GARDEN GROVE, CA 92642
10389	CHICAGO SWITCH, INC.	2035 WABANSIA AVE.	CHICAGO, IL 60647
12327	FREEWAY CORP.	9301 ALLEN DR.	CLEVELAND, OH 44125
13257	ESNA LTD.	10 ESNA PARK DR.	MARKHAM, ONTARIO, CANADA
22526	BERG ELECTRONICS, INC.	YOUK EXPRESSWAY	NEW CUMBERLAND, PA 17070
22599	ESNA, DIV. OF AMERACE CORP.	16150 STAGG STREET	VAN NUYS, CA 91406
23499	GAVITT WIRE AND CABLE, DIVISION OF RSC INDUSTRIES, INC.	455 N. QUINCE ST.	ESCONDIDO, CA 92025
34641	INSTRUMENT SPECIALTIES CO., INC.	1111 STANLEY DR.	EULESS, TEXAS 76039
56878	STANDARD PRESSED STEEL CO.	BOX 608 BENSON EAST	JENKINTOWN, PA 19046
70276	ALLEN MFG. CO.	P. O. DRAWER 570	HARTFORD, CT 06101
70318	ALLMETAL SCREW PRODUCTS CO., INC.	821 STEWART AVE.	GARDEN CITY, NY 11530
71159	BRISTOL SOCKET SCREW, DIV. OF AMERICAN CHAIN AND CABLE CO., INC.	40 BRISTOL ST.	WATERBURY, CT 06720
71279	CAMBRIDGE THERMIONIC CORP.	445 CONCORD AVE.	CAMBRIDGE, MA 02138
73743	FISCHER SPECIAL MFG. CO.	446 MORGAN ST.	CINCINNATI, OH 45206
73803	TEXAS INSTRUMENTS, INC., METALLURGICAL MATERIALS DIV.		ATTLEBORO, MA 02703
74445	ROLO-KROME CO.	31 BROOK ST. WEST	HARTFORD, CT 06110
77250	PHEOLL MANUFACTURING CO., DIVISION OF ALLIED PRODUCTS CORP	.5700 W. ROOSEVELT RD.	CHICAGO, IL 60650
78189	ILLINOIS TOOL WORKS, INC. SHAKEPROOF DIVISION	ST. CHARLES ROAD	ELGIN, IL 60120
80009	TEKTRONIX, INC.	P. O. BOX 500	BEAVERTON, OR 97077
80756	TRW INCS., RAMSEY CORP.	P. O. BOX 513	ST. LOUIS, MO 63166
83385	CENTRAL SCREW CO.	2530 CRESCENT DR.	BROADVIEW, IL 60153
87308	N. L. INDUSTRIES, INC., SOUTHERN SCREW DIV.	P. O. BOX 1360	STATESVILLE, NC 28677
88245	LITTON SYSTEMS, INC., USECO DIV.	13536 SATICOY ST.	VAN NUYS, CA 91409
95987	WECKESSER CO., INC.	4444 WEST IRVING PARK RD.	CHICAGO, IL 60641
98159	RUBBER TECK, INC.	19115 HAMILTON AVE.	GARDENA, CA 90247
98291	SEALECTRO CORP. AUTHORITIES	225 HOYT	MAMARONECK, NY 10544
99472	JOHNSON AND JOHNSON INC. PERMACEL DIV.	U.S. HIGHWAY 1	NEW BRUNSWICK, NJ 08901

Fig. & Index No.	Tektronix Part No.	Serial/Model No Eff	Dscont	Qty 1 2 3 4 5	Name & Description	Mfr Code	Mfr part Number
1-1	384-0996-01	B010100	B020369	1	SHAFT, EJECTOR: PLUG-IN, W/KNOB	80009	384-0996-01
	384-0996-02	B020370		1	SHAFT, EJECTOR: PLUG-IN, W/KNOB	80009	384-0996-02
-2	386-2837-00			1	PANEL, REAR:	80009	386-2R37-00
					(ATTACHING PARTS)		
-3	213-0192-00			5	SCR, TPG, THD FOR: 6-32 X 0.50 INCH, PNH STL	87308	OBD
-4	361-0326-00			1	SPACER, SLFEVE: 0.18 ID X 0.25 OD X 0.10"L	80009	361-0326-00
-5	211-0007-00			2	SCREW, MACHINE: 4-40 X 0.188 INCH, PNH STIL	83385	OBD
					- - -* -- -		
-6	----- ----			1	CKT BOARD ASSY: TRANSVERSE(SEE A3000A1 EFL)		
					(ATTACHING PARTS)		
-7	211-0116-00			3	SCR, ASSEM WSHR: 4-40 X 0.312 INCH, PNH BRS	83385	OBD
	.----- ------			-	CIRCUIT BOARD ASSEMBLY INCLUDES:		
-8	131-0608-00			3	.CONTACT, ELEC: 0.365 INCH LONG	22526	47357
-9	131-1617-01			2	.CONNECTOR, RCPT, : W/18-36 CONTACTS	80009	131-1617-01
-10	131-0993-00			1	.LINK, TERM.CONNE: 2 WIRE BLACK	00779	530153-2
-11	351-0217-00			1	GUIDE, CKT CARD: PLASTIC	80009	351-0217-00
					(ATTACHING PARTS)		
-12	220-0556-00			4	NUT, SLEEVE: 6-32 X 0.252 OD X 0.015"L BRS	80009	220-0556-00
-13	211-0507-00			4	SCREW, MACHINE: 6-32 X 0.312 INCH, PNH STL	83385	OBD
					- - - * - - -		
-14	351-0217-00			1	GUIDE, CKT CARD: PLASTIC	80009	351-0217-00
					(ATTACHING PARTS)		
-15	220-0557-00			4	NUT, SLEEVE: 6-32 X 0.204 OD X 0.118 L BRS	80009	220-0557-00
-16	211-0507-00			4	SCREW, MACHINE: 6-32 X 0.312 INCH, PNH STI.	83385	OBD
					- - - * - - -		
-17	129-0161-00			3	SPACER, POST: 0.86 INCH LONG, BRS	80009	129-0161-00
	644-0448-00			1	REFERENCE MDL:	80009	644-0448-00
					(ATTACHING PARTS)		
-18	213-0022-00			2	SETSCREW: 4-40 X 0.188 INCH, HEX SOC STL	74445	OBD
					- - - * - - -		
-19	337-2103-00			1	.SHIELD, ELEC: REF MODULE COVER	80009	337-2103-00
					(ATTACHING PARTS)		
-20	211-0234-00			24	.SCREW, MACHINE: 2-56 X 0.188 INCH, PNH SST	83385	OBD
					- - - * - - -		
-21	----- -----			1	.CKT BOARD ASSY: TUNE REF(SEE A100OA4 EPL)		
					(ATTACHING PARTS)		
-22	211-0162-00			4	.SCREW, MACHINE: 2-56 X 0.188 INCH, SCH, SST	000AH	OBD
					- - - * - - -		
	----- -----		-		..CIRCUIT BOARD ASSEMBLY INCLUDES:		
-23	131-1425-00			1	CONTACT SET, ELE: R ANGLE, 0.150" L, STR OF 36	22526	65521-136
-24	214-0579-00			2	TERM. , TEST PT: 0.40 INCH LONG	80009	214-0579-00
-25	136-0263-04			21	..SOCKET, PIN TERM: FOR 0.025 INCH SQUARE PIN	22526	75377-001
-26	136-0252-04			132	..SOCKET, PIN TERM: 0.188 INCH LONG	22526	75060
-27	131-0344-00			2	..TERMINAL, STUD: BIFURCATED	88245	421837-9
-28	358-0241-00			2	..INSULATOR, BSHG: O.05 ID X 0.125" OD, W/FLGE	88245	421565
-29	255-0569-00			FT	..PLASTIC STRIP: 0.125 THK, 0.5W, PRESS SENS	99472	PU25F
-30	----- -----			1	.CKT BOARD ASSY: "B" OSC(SEE A100OA6 EPL)		
					(ATTACHING PARTS)		
-31	211-0162-00			4	.SCREW, MACHINE: 2-56 X 0.188 INCH, SCH, SSTOOOAHOBD		
	----- -----			-	..CIRCUIT BOARD ASSEMBLY INCLUDES:		
-32	214-0579-00			2	..TERM. , TEST PT: 0.40 INCH LONG	80009	214-0579-00
-33	131-1493-00			2	..CONTACT, ELEC: TEST POINT STRAP	80009	131-1493-00
-34	136-0252-04			57	..SOCKET, PIN TERM: 0.188 INCH LONG	22526	75060
-35	136-0263-04			8	..SOCKET, PIN TERM: FOR 0.025 INCH SQUARE PIN	22526	75377-001
-36	----- -----			1	.CKT BD ASSY: REF.OSC AND CAL(SEE A100A8 EPL)		
					(ATTACHING PARTS)		
-37	211-0162-00			2	.SCREW, MACHINE: 2-56 X 0.188 INCH, SCH, SST	000AH	OBD
					- - - * - - -		
	---- ----			-	..CIRCUIT BOARD ASSEMBLY INCLUDES:		
-38	131-1425-00			1	..CONTACT SET, ELE: R ANGLE, 0.150" L, STR OF 36	2252	665521-136

Fig. & Index No.	Tektronix Part No.	Serial/Model No Eff	Dscont	Qty 1 2 3 4 5	Name & Description	Mfr Code	Mfr Part Number
1-41	131-1493-00			1	.CONTACT, ELEC: TEST POINT STRAP	80009	131-1493-00
-42	136-0252-04			22	.CONTACT, ELEC: 0.188 INCH LONG	22526	75060
-43	----- -----			1	.CKT BOARD ASSY: IST LO LOCK(SEE A100A5 EPL) (ATTACHING PARTS)		
-44	211-0162-00			2	.SCREW, CAP: 2-56 X 0.188 INCH SCH, SST - - - * - - -	56878	OBD
	----- -----	-			..CIRCUIT BOARD ASSEMBLY INCLUDES:		
-45	337-2237-00			1	..SHIELD, ELEC: 1ST LCL OSC LOCK, BOTTOM	80009	337-2237-00
-46	136-0263-04			8	..CONTACT, ELEC: FOR 0.025 INCH SQUARE PIN	22526	75377-001
-47	214-0579-00			2	..TERM. , TEST PT: 0.40 INCH LONG	80009	214-0579-00
-48	131-1493-00			1	..CONTACT, ELEC: TEST POINT STRAP	80009	131-1493-00
-49	337-2236-00			1	..SHIELD, ELEC: 1ST LCL OSC LOCK, TOP	80009	337-2236-00
-50	136-0252-04			41	..CONTACT, ELEC: 0.188 INCH LONG	22526	75060
-51	----- -----			1	..CKT BD ASSY: A AND B OSC CONT(SEE A100OA7 EPL) (ATTACHING PARTS)		
-52	211-0162-00			4	.SCREW, CAP: 2-56 X 0.188 INCH SCH, SST56878OBD - - - * - - -		
	----- -----	-			.CIRCUIT BOARD ASSEMBLY INCLUDES:		
-53	136-0263-04			17	..CONTACT, ELEC: FOR 0.025 INCH SQUARE PIN	22526	75377-001
-54	214-0579-00			2	..TERM. , TEST PT: 0.40 INCH LONG	80009	214-0579-00
-55	136-0252-04			71	.CONTACT, ELEC: 0.188 INCH LONG	22526	75060
-56	----- -----			1	.CKT BOARD ASSY: "A" OSC(SEE A1OOA2 EPL) (ATTACHING PARTS)		
-57	211-0162-00			4	.SCREW, CAP: 2-56 X 0.188 INCH SCH, SST56878OBD - - - * - - -		
	---- ----			-	.CIRCUIT BOARD ASSEMBLY INCLUDES:		
-58	136-0252-04			29	..CONTACT, ELEC: 0.188 INCH LONG	22526	75060
-59	136-0263-04			9	..CONTACT, ELEC: FOP 0.025 INCH SQUAPRE PIN	22526	75377-001
-60	131-1493-00			2	..CONTACT, ELEC: TEST POINT STRAP	80009	131-1493-00
-61	214-0579-00			2	..TERM. , TEST PT-0.40 INCH LONG	80009	214-0579-00
62	----- -----			1	.CKT BOARD ASSY: TUNE REF(SEE A100A3 EPL) (ATTACHING PARTS)		
-63	211-0162-00			4	.SCREW, CAP: 2-56 X 0.188 INCH SCH, SST56878OBD - - - * - - -		
	----- -----			-	.CIRCUIT BOARD ASSEMBLY INCLUDES:		
-64	136-0263-04			17	..CONTACT, ELEC: FOR 0.025 INCH SQUARE PIN	22526	75377-001
-65	136-0252-04			88	..CONTACT, ELEC: 0.188 INCH LONG	22526	75060
-66	131-1425-00			1	..CONTACT SET, ELE: R ANGLE, 0.150" L	22526	65275-001
-67	214-0579-00			2	..TERM. , TEST PT: 0.40 INCH LONG	80009	214-0579-00
-68	1]1-0344-00			2	..TERMINAL, STUD: BIFURCATED	88245	421837-9
-69	J58-0241-00			2	..INSULATOR, BSHG: 0.05 ID X 0.125" OD, W/FLGE	88245	421565
-70	346-0032-00			1	..STRAP, RETAINING:	98159	2829-75-4
-71	175-1673-00			1	.CABLE ASSY, RF: REF OSC TO 2ND LO W380	80009	175-1673-00
-72	175-1672-00			1	CABLE ASSY, RF: REF OSC TO 2ND LO W390	80009	175-1672-00
-73	175-1674-00			1	.CABLE ASSY, RF: REF OSC TO CALIBRATOR W385	80009	175-1674-00
-74	----- -------			1	.CKT BD ASSY: FREQ REF(SEE A10OA1 EPL) (ATTACHING PARTS)		
-75	211-0162-00			22	.SCREW, CAP: 2-56 X 0.188 INCH SCH, SST56878OBD - - - * - - -		
	----- -----			-	..CKT BD ASSY INCLUDES:		
-76	131-0590-00			27	..CONTACT, ELEC: 0.71 INCH LONG	22526	47351
-77	386-1556-00			1	..SPACER, CKT BD: 0.215 BD HT, PLASTIC	80009	386-1556-00
-78	351-0213-00			3	..GUIDE-POST, LOCK: 0.285 INCH LONG	80009	351-0213-00
79	131-1729-00			1	..CONN, RCPT, ELEC: SMB SNAP-ON, 50 OHM	98291	051-051-0219-01
80	131-0593-00			31	..CONTACT, ELEC: 1.15 INCH LONG	22526	47354
81	281-0752-00			7	..CAP. , FXD, CER DI: 1750PF	80009	281-0752-00
82	136-0263-04			5	..CONTACT, ELEC: FOR 0.025 INCH SQUARE PIN	22526	75377-001
83	337-2279-00			1	.SHIELD, ELEC: MOTHER BOARD	80009	337-2279-00
84	131-1612-01			15	.TERM, FEEDTHRU: W/INSULATOR	80009	131-1612-01
-85	337-2065-00			1	.SHIELD, ELEC: REF MODULE	80009	337-2065-00
-86	----- -----			1	CKT BOARD ASSY: DIGITAL AVG(SEE A4000 EPL) (ATTACHING PARTS)		
-87	211-0018-00			3	SCREW, MACHINE: 4-40 X 0.875 PNH, STL - - - * - - -	83385	OBD
	136-0269-02 XB020275			10	.SOCKET, PLUG-IN: 14 CONTACT, LOW CLEARANCE	01295	C931402
	136-0260-02 XB020275			22	.SOCKET, PLUG-IN: 16 CONTACT, LOW CLEARANCE	01295	C931602

Fig. & Index No.	Tektronix Part No.	Serial/Model No Eff	Dscont	Qty 1 2 3 4 5	Name & Description	Mfr Code	Mfr Part Number
1-86	----- -----			1	CKT BOARD ASSY: DIGITAL AVG(SEE A4000 EPL)		
					(ATTACHING PARTS)		
-87	211-0018-00			3	SCREW, MACHINE: 4-40 X 0.875 PNH, STL	83385	OBD
					- - - * - - -		
	136-0269-02	XB020275		10	.SOCKET, PLUG-IN: 14 CONTACT, LOW CLEARANCE	01295	C931402
	136-0260-02	XB020275		22	.SOCKET, PLUG-IN: 16 CONTACT, LOW CLEARANCE	01295	C931602
	----- ------.			-	CKT BOARD ASSY INCLUDES:		
-88	131-1425-00			1	.CONTACT SET, ELE: R ANGLE, 0.150" L, STR OF 36	22526	65521-136
-89	----- -----			1	CKT BOARD ASSY: DIGITAL STOR(SEE A4500 EPL)		
-90	214-0579-00			5	.TERM., TEST PT: 0.40 INCH LONG	80009	214-0579-00
-91	136-0621-00			1	.SOCKET, PLUG-IN: 22 CONTACT	73803	C932202
-92	136-0260-02	B010100	B020274	1	.SOCKET, PLUG-IN: 16 CONTACT, LOW CLEARANCE	01295	C931602
	136-0260-02	B020275		19	.SOCKET, PLUG-IN: 16 CONTACT, LOW CLEARANCE	01295	C931602
-93	136-0263-04			19	.SOCKET, PIN TERM: FOR 0.025 INCH SQUARE PIN	22526	75377-001
-94	361-0766-00			3	.SPACER, SLEEVE: 0.136 ID X 0.593 LONG, BRS	80009	361-0766-00
	136-0269-02	XB020275		12	.SOCKET, PLUG-IN: 14 CONTACT, LOW CLEARANCE	01295	C931402
	136-0514-00	XB020275		6	.SOCKET, PLUG IN: MICROCIRCUIT, 8 CONTACT	73803	C9308-02
-95	----- -----			1	CKT BOARD ASSY: SWEEP(SEE A500 EPL)		
					(ATTACHING PARTS)		
-96	211-0116-00			3	SCR, ASSEM WSHR: 4-40 X 0.312 INCH, PNH BRS	83385	OBD
					- - - * - - -		
	----- -----			-	.CKT BOARD ASSY INCLUDES:		
-97	366-1389-00			2	.KNOB: GRAY80009366-1389-00		
	.----- ------			-	..EACH KNOB INCLUDES:		
	213-0306-00			1	..SETSCREW: 2-56 X 0.062 INCH, OX STL74445OBD		
-98	----- -----			1	.RESISTOR, VAR: (SEE R755 EPL)		
					(ATTACHING PARTS)		
-99	210-0583-00			1	.NUT, PLAIN, HEX.: 0.25-32 X 0.312 INCH, BRS737432X20224-402		
					- - - * - - -		
-100	----- -----			1	.RESISTOR, VAR: (SEE R750 EPL)		
					(ATTACHING PARTS)		
-101	210-0583-00			1	.NUT, PLAIN, HEX.: 0.25-32 X 0.312 INCH, BRS	73743	2X20224-402
-102	361-0387-00			1	.SPACER, RING: 0.255 ID X 0.375 INCH OD	80009	361-0387-00
					- - - * - - -		
-103	----- -----			1	.RESISTOR, VAR: (SEE R747 EPL)		
					(ATTACHING PARTS)		
-104	210-0583-00			1	.NUT, PLAIN, HEX. : 0.25-32 X 0.312 INCH, BRS	73743	2X20224-402
					- - - * - - -		
-105	407-1574-00			1	.BRACKET, VAR RES: TRIPLE	80009	407-1574-00
					(ATTACHING PARTS)		
-106	211-0180-00			2	.SCR, ASSEM WSHR: 2-56 X 0.25 INCH, PNH BRS	83385	OBD
					- - - * - - -		
-107	136-0252-04			214	.SOCKET, PIN TERM: 0.188 INCH LONG	22526	75060
-108	131-0608-00			25	.CONTACT, ELEC: 0.365 INCH LONG	22526	47357
-109	131-0590-00			24	.CONTACT, ELEC: 0.71 INCH LONG	22526	47351
-110	136-0260-02			1	.SOCKET, PLUG-IN: 16 CONTACT, LOW CLEARANCE	01295	C931602
-111	136-0263-04			28	.SOCKET, PIN TERM: FOR 0.025 INCH SQUARE PIN	22526	75377-001
-112	129-0266-00			3	.POST, ELEC-MECH: 0.515 L X 0.219 OD, 0.219 BRS	80009	129-0266-00
-113	346-0130-00			1	.STRAP, RETAINING: FOR 40 CONTACT SBSTR SKT	00779	350894-1
-114	136-0641-00			1	.SOCKET, PLUG-IN: 40 CONTACT	00779	1-485169-2
-115	136-0578-00			1	.SOCKET, PLUG-IN: 24 DIP, LOW PROFILE	01295	C932402
-116	131-1617-01			1	.CONNECTOR, RCPT, : W/18-36 CONTACTS	80009	131-1617-01
	131-0993-00	XB030642		1	.LINK, TERM.CONNE: 2 WIRE BLACK	00779	530153-2
	644-0451-00			1	RF MODULE ASSY:	80009	644-0451-00
	672-0556-00			1	.CKT BOARD ASSY: VERTICAL CONTROL	80009	672-0556-00
					(ATTACHING PARTS)		
-117	211-0116-00			3	.SCR, ASSEM WSHR: 4-40 X 0.312 INCH, PNH BRS83385OBD		
					- - - * - - -		
-118	----- -----			1	..CKT BOARD ASSY: VERT CONTROL(SEE A2000A2 EPL)		
-119	136-0252-04	B010100	B020274	30	...SOCKET, PIN TERM: 0.188 INCH LONG	22526	75060
	136-0252-04	B020275		60	...SOCKET, PIN TERM'O.188 INCH LONG	22526	75060
-120	136-0578-00			1	...SOCKET, PLUG-IN: 24 DIP, LOW PROFILE	01295	C932402
-121	346-0130-00			1	...STRAP, RETAINING: FOR 40 CONTACT SBSTR SKT	00779	350894-1

Fig. & Index No.	Tektronix Part No.	Serial/Model No Eff	Dscont	Qty 1 2 3 4 5	Name & Description	Mfr Code	Mfr Part Number
1-132	342-0240-00			1	.INSULATOR, FIILM: RF TUBE, W/SEIF ADH BACK	80009	342-0240-00
-133	348-0469-00	B010100	B020209	4	.SHLD, GSKT, ELEC: 0.37 WIDE W/ADE TAPE	34641	97520-A
	351-0490-00	B020210		2	.GUIDE, SLIDE: GROUNDING	80009	351-0490-00
					(ATTACHING PARTS)		
	210-0671-00 XB020210			4	.EYELET, METALLIC: 0.121 OD BARREL, GOLD PLATED		57771 OBD
					- - - * - - -		
-134	351-0457-01	B010100	B020209	4	.GUIDE, SLIDE: PLUG-IN, W/FOAM	80009	351-0457-01
	351-0489-00	B020210		2	.GUIDE, SLIDE: GROUNDING	80009	351-0489-00
					(ATTACHING PARTS)		
	210-0671-00	B020210		4	.EYELET, METALLIC: 0.121 OD BARREL, GOLD PLATED		57771 OBD
					- - - * - - -		
-135	337-2099-00			1	.SHIELD, ELEC: RF TUBE	80009	337-2099-00
					(ATTACHING PARTS)		
-136	211-0008-00			2	.SCREW, MACHINE: 4-40 X 0.25 INCH, PNH STL	83385	OBD
					- - - * - - -		
-137	105-0628-00			1	.EJECTOR, PLUG-IN: RF	80009	105-0628-00
-138	337-2095-00			1	.SHIELD, ELEC: IF TUBE, WRAPAROUND	80009	337-2095-00
					(ATTACHING PARTS)		
-139	211-0087-01			4	.SCREW, MACHINE: 2-56 X 0.188" 82 DEG, FIH, STL	83385	OBD
					- - - * - - -		
	644-0450-00			1	.1ST LO MDL ASSY:	80009	644-0450-00
-140	214-1280-00			1	..SPRING, HLCPS: 0.14 OD X 1.126"L, 0.16"DIA W	80009	214-1280-00
					(ATTACHING PARTS)		
-141	211-0069-00			1	..CREW, MACHINE: 2-56 X 0.125 INCH, PNH STL	77250	OBD
					- - - * - - -		
-142	337-2266-00			2	..SHIELD, ELEC: FIRST OSCILLATOR PLATE	80009	337-2266-00
					(ATTACHING PARTS FOR EACH)		
-143	211-0105-00			1	..SCREW, MACHINE: 4-40 X 0.188"100 DEG, FILH STL	83385	OBD
					- - - * - - -		
-144	337-2094-00			1	..SHIELD, ELEC: OSC AND BUFFER BOX COVER	80009	337-2094-00
					(ATTACHING PARTS)		
-145	211-0069-00			8	..SCRE, MACHINE: 2-56 X 0.125 INCH, PNH STL	77250	OBD
					- - - * - - -		
-146	----- -----			1	..CKT BD ASSY: FIRST LO(SEE A200A1A1 EPL)		
					(ATTACHING PARTS)		
-147	211-0162-00			4	..SCREW, MACHINE: 2-56 X 0.188 INCH, SCH, SST	70276	OBD
					- - - * - - -		
	----- -----			-	...CKT BOARD ASSY INCLUDES:		
-148	----- -----			1	...MICROCKT, LI: VOLT REG (SEE A2000A1A1 EPL)		
					(ATTACHING PARTS)		
-149	211-0105-00			1	...SCREW, MACHINE: 4-40 X 0.188"100DEG, FLH STI	83385	OBD
					- - - * - - -		
-150	131-1425-00			1	...CONTACT SET, ELE: R ANGLE, 0.150"L, STR OF 36	65521-136	
-151	214-0579-00			2	...TERM., TEST PT: 0.40 INCH LONG	80009	214-0579-00
-152	136-0252-04’			30	...CONTACT, ELEC: 0.188 INCH LONG	22526	75060
-153	136-0263-04			5	...CONTACT, ELEC: FOR 0.025 INCH SQUARE PIN	22526	75377-001
-154	----- -----			1	..CKT BD ASSY: 1ST LO MOTHER(SEE A2000A1A2 EPL)		
					(ATTACHING PARTS)		
-155	211-0162-00			8	...SCREW, MACHINE: 2-56 X 0.188 INCH, SCH, SST	70276	CBD
-156	210-0259-00			2	...TERMINAL, LUG: 0.099"ID INT TOOTH, SE	80009	210-0259-00
					- - - * - - -		
	------			-	...CIRCUIT BOARD ASSEMBLY INCLUDES:		
-157	131-0593-00			3	...CONTACT, ELEC: 1.15 INCH LONG	22526	47354
-158	281-0752-00			3	...CAP. , FXD, CER DI: 0.00175UF, 10A	72982	1214-007
-159	346-0032-00			1	...STRAP, RETAINING:	98159	2829-75-4
-160	131-0938-00			1	...CONNECTOR, RCPT, : 50 OHM MALE SNAP-ON	98291	051-043-0349
-161	131-1605-00			2	..CONNECTOR, RCPT, : KMALE, 50 OHM, SLIDE-ON	000A	FA 00.250
-162	175-1670-00			1	..CABLE ASSY: RF: 50 OEM, 5.166 INCH, W200	80009	175-1670-00
					(ATTACHING PARTS)		
-163	211-0069-00			1	..SCREW, MACHINE: 2-56 X 0.125 INCH, PNH STL	77250	OBD
					- - - * - - -		
-164	337-2072-00			1	.SHIELD, ELEC: OSC-BUFFER	80009	337-2072-00
	644-0449-00			1	IF MODULE ASSY:	80009	644-0449-00
					(ATTACHING PARTS)		
-165	213-0075-00			2	SETSCREW: 4-40 X 0.094 INCH, HEX SOC STL	70276	OBD
-166	211-0101-00			2	SCREW, MACHINE: 4-40 X 0.25" 100 DEG, FLH STL	83385	CBD
					- - - * - - -		
-167	337-2088-00			1	.SHIELD, ELEC: PRE VOLTAGE REG COVER-	80009	337-2088-00
					(ATTACHING PARTS)		
-168	211-0234-00			20	.SCREW, MACHINE: 2-56 X 0.188 INCH, PNH SST	83385	OBD

Fig. & Index No.	Tektronix Part No.	Serial/Model No Eff	Dscont	Qty 1 2 3 4 5	Name & Description	Mfr Code	Mfr Part Number
1-	---- ----			-	...CIRCUT BOARD ASSEMBLY INCLUDES:		
-157	131-0593-00			3	...CONTACT, ELEC1.15 INCH LONG	22526	47354
-158	281-0752-00			3	...CAP, FXD, CER DI: 0.00175UF, IOA	72982	1214-007
-159	346-0032-00			1	...STRAP, RETAININGI	98159	2829-75-4
-160	131-0938-00			1	...CONNECTOR, RQPT, 50 OHM MALE SNRP-ON	98291	051-043-0349
-161	131-1605-00			2	..CONNECTOR, RCPT, MALE, 50 OHM, SLIDE-ON	0000A	FA 00.250
-162	175-1670-00			1	..CABLE ASSY: RF:50 OM, 5.166 INCH, W200	80009	175-1670-00
					(ATTACHING PARTS)		
-163	211-0069-00			1	..SCREW, MACHINE: 2-56 X 0.125 INCH, PNH STL	77250	OBD
-164	337-2072-00			1	.SHIELD, ELECOSC-BUFFER	80009	337-2072-00
	644-0449-00			1	IF MODULE ASSY:	80009	644-0449-00
					(ATTACHING PARTS)		
-165	213-0075-00			2	SETSCREW: 4-40 X 0.094 INCH, BEX SOC STL	70276	OBD
-166	211-0101-00			2	SCREW, MACHINE14-40 X 0.25' 100 DEG, FLR STL	83385	08D
					- - - * - - -		
-167	337-2088-00			1	.SHIELD, ELEC:PRE VOLTAGE REG COVER	80009	337-2088-00
					(ATTACHING PARTS)		
-168	211-0234-00			20	.SCREW, MACHINE:2-56 X 0.188 INCH, PNH SST	83385	OBD
					- - - * - - -		
-169	342-0321-00			1	.INSULATOR, FILM:POLYESTER 4/SELF ADH BACK	80009	342-0321-00
-170	337-2278-00			1	.SHIELD, ELEC:2ND MIXER	80009	337-2278-00
-171	----- -----			1	.FILTER, BANDPASS:10.7 MHZ(SEE FL1300 EPL)		
	348-0480-00			1	.SHLD, GSKT, ELEC:30 KIZ FILTER	80009	348-0480-00
-172	131-1612-01			6	.TERMINAL, FEEDTH: W/INSULATOR	80009	131-1612-01
-173	----- -----			1	CKT BD ASSY: 10.7 MIZ IF AMP(SEE A1000A4 EPL)		
					(ATTACHING PARTS)		
-174	211-0196-00			2	.SCREW, MACHINE: 4-40 X 0.188, SCH, HEX, STL	000AH	OBD
					- - - * -- -		
	----- -----			-	.CIRCUIT BOARD ASSEMBLY INCLUDES		
-175	131-0608-00			2	CONTACT, ELEC:0.365 INCH LONG	22526	47357
-176	214-0579-00			2	..TERM. , TEST PT: 0.40 INCH LONG	80009	214-0579-00
-177	136-0252-04			7	..SOCKET, PIN TERM:0.188 INCH LONG	22526	75060
-178	136-0263-04			4	.SOCKET, PIN TERM:FOR 0.025 INCH SQUARE PIN	22526	75377-001
-179	----- -----			1	.CKT BD ASSY:10.7 MHZ FILTER(SEE A1000A2 EPL)		
					(ATTACHING PARTS)		
-180	211-0196-00			2	.SCREW, MACHINE:4-40 X 0.188, SCH, HEX, STL	000AH	OBD
					- - - * - - -		
-181	131-0608-00			4	..CONTACT, ELEC:0.365 INCH LONG	22526	47357
-182	----- -----			1	.CKT BOARD ASSY:SECOND MIXER (SEE A1000A7 EPL)		
					(ATTACHING PARTS)		
-183	211-0196-00			3	.SCREW, MACHINE: 4-40 X 0.188, SCB, HEX, STL	000AH	OBD
					- - - * - - -		
	----- -----			-	..CIRCUIT BOARD ASSEMBLY INCLUDES:		
-184	214-0579-00			2	..TERM. , TEST PT:0.40 INCH LONG	80009	214-0579-00
-185	136-0263-04			6	..SOCKET, PIN TERM: FOR 0.025 INCH SOUARE PIN	22526	75377-001
-186	----- -----			1	.CKT BD ASSY:2ND LO LOCK (SEE A1000A6 EPL)		
					(ATTACHING PARTS)		
-187	211-0196-00			2	.SCREW, MACHINE: 4-40 X 0.188, SCH, HEX, STL	000AH	OBD
					- - - * - - -		
	----- -----			-	..CIRCUIT BOARD ASSEMBLY INCLUDES:		
-188	214-0579-00			2	..TERM. , TEST PT:0.40 INCH LONG	80009	214-0579-00
-189	131-0608-00			2	..CONTACT, ELEC:0.365 INCH LONG	22526	47357
-190	----- -----			1	...MICROCIRCUIT, LI: VOLTAGE REG (SEE U1501 EPL)		
					(ATTACHING PARTS)		
-191	211-0016-00			1	SCREW, MACHINE: 4-40 X 0.625 INCH, PNH STL	83385	OBD
					- - - * - - -		
-192	351-0213-00			1	..GUIDE-POST, LOCK:0.285 INCH LONG	80009	351-0213-00
-193	136-0263-04			3	..SOCKET, PIN TERM: FOR 0.025 INCH SQUARE PIN	22526	75377-001
-194	136-0252-04			13	SOCET, PIN TERM: 0.188 INCH LONG	22526	75060
-195	136-0260-02			3	..SOCET, PLG-IN:16 CONTACT, LOW CLEARANCE	01295	C931602
-196	---- ----			1	.CKT BOARD ASSY:2501RZ AMP (SEE A100A5 EPL)		
					(ATTACHING PARTS)		
-197	211-0196-00			4	..SCREW, MACHINE: 4-40 X 0.188, SCH, HEX, STL	000AH	0BD
					- - - * - - -		

Fig. & Index No.	Tektronix Part No.	Serial/Model No Eff	Dscont	Qty 1 2 3 4 5	Name & Description	Mfr Code	Mfr Part Number
1-209	---- ----			1	CKT BOARD ASSY: LOG LIN AMP(SEE A1000A3 EPL) (ATTACHING PARTS)		
-210	211-0196-00			3	.SCREW, MACHINE: 4-40 X O.188, SCH, HEX, STL - - - * - - -	80009	211-0196-00
	----- -----			-	..CIRCUIT BOARD ASSEMBLY INCLUDES:		
-211	136-0263-04			11	..CONTACT, ELEC: FOR 0.025 INCH SQUARE PIN	22526	75377-001
-212	136-0252-04			106	..CONTACT, ELEC: 0.188 INCH LONG	22526	75060
-213	214-0579-00			3	..TERM. , TEST PT: 0.40 INCH LONG	80009	214-0579-00
	672-0486-00			1	.CKT BOARD ASSY: RESOLUTION AND CRYSTAL	80009	672-0486-00
-214	---- ----			4	.CKT BOARD ASSY: CRYSTAL HOLDER(SEE A8A2 EPL)		
	----- -----.			-	..EACH CIRCUIT BOARD ASSEMBLY INCLUDES:		
-215	136-0234-00			2	...CONTACT, ELEC: 0.088 OD X 0.247 INCH L	00779	380598-1
-216	136-0328-02			2	... CONTACT, ELEC: HORIZONTAL	00779	86282-2
-217	----- -----			1	..CKT BOARD ASSY: VAR RESOLN(SEE A100OA8A1 EPL) (ATTACHING PARTS)		
-218	211-0196-00			10	..SCREW, MACHINE: 4-40 X 0.188, SCH, HEX, STL - - - * - - -	80009	211-0196-00
	-----.----			-	...CIRCUIT BOARD ASSEMBLY INCLUDES:		
-219	131-0608-00			15	...CONTACT, ELEC: 0.365 INCH LONG	22526	47357
-220	214-0579-00			5	...TERM. , TEST PT: 0.40 INCH LONG	80009	214-0579-00
-221	352-0387-00			8	...HOLDER, CRYSTAL:	80009	352-0387-00
-222	131-0590-00			8	...CONTACT, ELEC: 0.71 INCH LONG	22526	47351
-223	337-2100-00			1	...SHIELD, ELEC: FILTER TO VOLTAGE REG, TOP	80009	337-2100-00
-224	136-0252-04			133	...CONTACT, ELEC: 0.188 INCH LONG	22526	75060
-225	136-0263-04			14	...CONTACT, ELEC: FOR 0.025 INCH SQUARE PIN	22526	75377-001
-226	337-2142-00			1	...SHTELD, ELEC: FILTER TO VOLTAGE REG, BOTTOM	80009	337-2142-00
-227	337-2096-00			1	.SHIELD, ELEC: FI MODULE, RIGHT (ATTACHING PARTS)	80009	337-2096-00
-228	211-0206-00			4	.SCREW, CAP: 2-56 X 0.312 INCH, SCH STL	83385	OBD
-229	211-0087-00			3	.SCREW, MACHINE: 2-56 X 0.188 INCH, FLH SST - - - * - - -	70318	OBD
-230	346-0126-00			4	. STRAP, RETAINING: (ATTACHING PARTS FOR EACH)	80009	346-0126-00
-231	211-0069-00			1	.SCREW, MACHINE: 2-56 X 0.125 INCH, PNH STL - - - * - - -	77250	OBD
-232	337-2092-00			1	.SHIELD, ELEC: LEFT, SIDE, UPPER (ATTACHING PARTS)	80009	337-2092-00
-233	211-0087-00			2	.SCREW, MACHINE: 2-56 X 0.188 INCH, FLH SST	70318	OBD
-234	211-0112-00			1	.SCREW, MACHINE: 4-40 X 0.375", FLH, 100 DEG, STL	83385	OBD
-235	211-0162-00			1	.SCREW, CAP: 2-56 X 0.188 INCH SCH, SST - - - * - - -	56878	OBD
-236	337-2090-01			1	.SHIELD, ELEC: LEFT SIDE, LOWER (ATTACHING PARTS)	80009	337-2090-01
-237	211-0087-00			7	.SCREW, MACHINE: 2-56 X 0.188 INCH, FLH SST	70318	OBD
-238	211-0112-00			2	.SCREW, MACHINE: 4-40 X 0.375" FLH, 100 DEG STL - - - * - - -	83385	OBD
-239	337-2093-00			2	.SHIELD, ELEC: FRONT AND REAR LEFT SIDE (ATTACHING PARTS FOR EACH)	80009	337-2093-00
-240	211-0087-00			2	.SCREW, MACHINE: 2-56 X 0.188 INCH, FLH SST - - - * - - -	70318	OBD
-241	342-0315-00			4	.INSULATOR, FILM: CIRCUIT BOARD, BOTTOM	80009	342-0315-00
-242	342-0316-00			1	.INSULATOR, FILM: CIRCUIT BOARD, TOP	80009	342-0316-00
-243	337-2091-00			1	.SHIELD, ELEC: LOG LIN TO FILTER (ATTACHING PARTS)	80009	337-2091-00
-244	211-0087-00			5	.SCREW, MACHINE: 2-56 X 0.188 INCH, FLH SST - - - * - - -	70318	OBD
-245	337-2089-00			1	.SHIELD, ELEC: LOG LIN TO VOLTAGE REGULATOR (ATTACHING PARTS)	80009	337-2089-00
-246	211-0087-00			2	.SCREW, MACHINE: 2-56 X 0.188 INCH, FLH SST - - - - * - - -	70318	OBD
-247	131-1612-01			2	.TERM, FEEDTHRU: W/INSULATOR	80009	131-1612-01
-248	-- -----			1	.CRT BD ASSY: I.F. MDL MOTHER(SEE A1000A1 EPL)		
-249	129-0106-00			13	..POST, ELEC-MECH: 4-40 X 0.219 X 0.125 INCH L	80009	129-0106-00

Fig. & Index No.	Tektronix Part No.	Serial/Model No Eff	Dscont	Qty 1 2 3 4 5	Name & Description	Mfr Code	Mfr Part Number
1-239	337-2093-00			2	.SHIELD, ELEC:FRONT AND REAR LEFT SIDE	80009	337-2093-00
					(ATTACHING PARTS FOR EACH)		
-240	211-0087-00			2	.SCREW, MACHINE: 2-56 X 0.188 INCH, FLH SST	70318	OBD
					- - - * - - -		
-241	342-0315-00			4	.INSULATOR, FILM:CKT BD, BOTTOM, W/SELF ADH B	80009	342-0315-00
-242	342-0316-00			1	.INSULATOR, FILM:CKT BOARD, TOP, W/SELF ADH B	80009	342-0316-00
-243	337-2091-00			1	.SHIELD, ELEC:LOG LIN TO FILTER	80009	337-2091-00
					(ATTACHING PARTS)		
-244	211-0087-00			5	.SCREW, MACHINE: 2-56 X 0.188 INCH, FLH SST	70318	OBD
					- - - * - - -		
-245	337-2089-00			1	.SHIELD, ELEC: LOG LIN TO VOLTAGE REG	80009	337-2089-00
					(ATTACHING PARTS)		
-246	211-0087-00			2	.SCREW, MACHINE:2-56 X 0.188 INCH, FLH SST	70318	OBD
-247	131-1612-01			2	.TERMINAL, FEEDTH: W/INSULATOR	80009	131-1612-01
-248	----- -----			1	.CKT BD ASSY: I.F. MDL MOTHER(SEE A1OOOAI EPL)		
-249	129-0106-00			13	.POST, ELEC-MECH:0.218 OD X 0.125 INCH L, RRS	80009	129-0106-00
-250	131-0591-00			30	.CONTACT, ELEC:0.835 INCH LONG	22526	47352
-251	131-0608-00			34	.CONTACT, ELEC:0.365' INCH LONG	2252	47357
-252	131-0593-00			3	..CONTACT, ELEC:1.15 INCH LONG	22526	47354
-253	281-0752-00			3	..CAP. , FXD, CER DI:0.00175UF, 10A	72982	1214-007
-254	131-0595-00			2	..CONTACT, ELEC:1.37 INCH LONG	22526	47355
-255	175-1667-00			1	.CA ASSY, SP, ELEC:2ND LO TO REFOSC	80009	175-1667-00
-256	175-1668-00			1	.CA ASSY, SP, ELEC:2ND LO TO REFOSC	80009	175-1668-00
-257	175-1669-00			1	.CA ASSY, SP, ELEC:10.7 MHZ TO OSC BUFFER	80009	175-1669-00
	614-0559-00			1	FRONT PNL ASSY:	80009	614-0559-00
-258	66-1610-02			1	.KNOB:GRAY--DOT MKR	80009	366-1610-02
	213-0153-00			1	.SETSCREW:5-40 X 0.125 INCH, HEX SOC STL	74445	OBD
-259	366-1007-02			1	.KNOB:GRAY	80009	366-1007-02
	213-0153-00			2	..SETSCREW:5-40 X 0.125 INCH, HEX SOC STL	74445	OBD
-260	366-1610-01			1	.KNOB:GRAY--VAR	80009	366-1610-01
	213-0153-00			1	..SETSCREW: 5-40 X 0.125 INCH, HEX SOC STL	74445	OBD
-261	366-1007-04			1	.KNOB:GRAY	80009	366-1007-04
	213-0153-00			2	..SETSCREW: 5-40 X 0.125 INCH, HEX SOC STL	74445	OBD
-262	366-0494-00			2	.KNOB:GRAY	80009	366-0494-00
	----- -----			-	.EACH KNOB INCLUDES:		
	213-0153-00			1	..SETSCREW: 5-40 X 0.125 INCH, HEX SOC STL	74445	OBD
-263	358-0301-00			3	.BUSHING, SLEEVE: FOR 0.185 DIA HOLE, GRAY	80009	358-0301-00
-264	366-1058-63			1	.KNOB:LATCH--7L5	80009	366-1058-63
					(ATTACHING PARTS)		
-265	214-1095-00			1	.PIN, SPG, SPLIT:0.094 OD X 0.187 INCH LONG	13257	52-022-094-0187
					- - - * - - -		
	105-0076-02	B010100	B030639	1	.REL BAR, LATCH:PLUG-IN UNIT	80009	105-0076-02
-266	105-0076-00	B030640		1	.REL BAR, LATCH:PLUG-IN UNIT	80009	105-0076-00
-267	214-1280-00			1	.SPRING, HLCPS: 0.14 OD X 1.126"L, 0.16"DIA W	80009	214-1280-00
					(ATTACHING PARTS)		
-268	211-0069-00			1	.SCREW, MACHINE: 2-56 X 0.125 INCH, PNH STL	77250	OBD
					- - - * - - -		
-269	----- -----			1	.SWITCH, ROTARY: RES AND SPAN (SEE A1A2 EPL)		
					(ATTACHING PARTS)		
-270	211-0007-00			2	.SCREW, MACHINE: 4-40 X 0.188 INCH, PNH STL	83385	OBD
					- - - * - - -		
-271	----- -----			1	.SWITCH, ROTARY: SWEEP TIME (SEE ALA3 EPL)		
					(ATTACHING PARTS)		
-272	211-0007-00			2	.SCREW, MACHINE:4-40 X 0.188 INCH, PNH STL	83385	OBD
					- - - * - - -		
-273	333-1936-00			1	.PANEL, FRONT:	80009	333-1936-00
-274	426-1181-00			1	.FR SECT, PLUG-IN:	80009	426-1181-00
-275	348-0235-00			2	.SHLD GSKT, ELEC:4.734 INCH LONG	80009	348-0235-00
-276	351-0432-00			1	.GUIDE POST: LOWER	80009	351-0432-00
					(ATTACHING PARTS)		
-277	211-0105-00			1	.SCREW, MACHINE: 4-40 X 0.188'100 DEG, FLH STL	83385	OBD

Fig. & Index No.	Tektronix Part No.	Serial/Model No Eff	Dscont	Qty 1 2 3 4 5	Name & Description	Mfr Code	Mfr Part Number
1-289	----- -----			1	.RESISTOR, VAR: (SEE R95, S96 EPL)		
					(ATTACHING PARTS)		
-290	210-0583-00			1	.NUT, PLAIN, HEX.: 0.25-32 X 0.312 INCH, BRS	73743	2X20224-402
-291	426-1179-00			1	.FR SECT, PLUG-IN: LOWER LEFT	80009	426-1179-00
					(ATTACHING PARTS)		
-292	213-0192-00			2	.SCR, TPG, THD FOR: 6-32 X 0.50 INCH, PNH STL	87308	OBD
					- - - * - - -		
-293	214-1054-00			1	.SPRING, DETENT: LATCH	80009	214-1054-00
-294	105-0075-00			1	.PAWL: 0.475 X 0.21 X 0.184 INCH, PLSTC	80009	105-0075-00
-295	263-0019-00			15	.ACTR ASSY, PB: MOMENTARY	80009	263-0019-00
-296	376-0161-00			1	.COUPLER, SW: 0.157 ID X 0.562 OD, FEMALE	80009	376-0161-00
					(ATTACHING PARTS)		
-297	354-0272-00			1	.RING, RETAINING: 0.467 ID X 0.018 THICK	80756	US50C1
					- - - * - - -		
-298	354-0518-00			1	.RING, ROT SW: SLIP	80009	354-0518-00
					(ATTACHING PARTS)		
-299	211-0087-01			1	.SCREW, MACHINE: 2-56 X 0.188" 82 DEG, FLH, STL	83385	OBD
					- - - * - - -		
-300	214-0660-00			1	.PIN, STR, HDLS: 0.062 OD X 0.312 INCH LONG, STL	22599	59-012-062-0312
-301	376-0162-00			1	.COUPLER, SW: 0.157 ID X 0.50 OD, MALE	80009	376-0162-00
					(ATTACHING PARTS)		
-302	213-0022-00			1	.SETSCREW: 4-40 X 0.188 INCH, HEX SOC STL	74445	OBD
					- - - * - - -		
-303	214-2254-00			1	.SPRING, DETENT: 0.59 ID X 0.09 HIGH	80009	214-2254-00
-304	214-1127-00			1	.ROLLER, DETENT: 0.125 DIA X 0.125 INCH L	80009	214-1127-00
-305	214-1579-00			1	.SPRING, DETENT:	80009	214-1579-00
-306	214-1127-00			1	.ROLLER, DETENT: 0.125 DIA X 0.125 INCH L	80009	214-1127-00
-307	380-0244-00			2	.HOUSING, SWITCH:	80009	380-0244-00
					(ATTACHING PARTS FOR EACH)		
-308	210-0405-00			2	.NUT, PLAIN, HEX. : 2-56 X 0.188 INCH, BRS	73743	2X12157-402
					- - - * - - -		
-309	384-0994-04			1	.SHAFT, TRTY SW: W/16 POSN DETENT AND CONT	80009	384-0994-04
-310	384-0994-03			1	.SHAFT, TRTY SW: W/32 POSN DETENT AND CONT	80009	384-0994-03
-311	----- -----			1	.RESISTOR, VAR: (SEE R50 EPL)		
					(ATTACHING PARTS)		
-312	210-0405-00			2	.NUT, PLAIN, HEX. : 2-56 X 0.188 INCH, BRS	737432	X12157-402
-313	213-0202-00			2	.SCREW, MACHINE: 2-56 X 0.625 INCH, FLH STL		
					- - - * - - -		
-314	----- -----			1	.RESISTOR, VAR: (SEE R45, S45 EPL)		
					(ATTACHING PARTS)		
-315	210-0405-00			2	.NUT, PLAIN, HEX. : 2-56 X 0.188 INCH, BRS	73743	2X12157-402
-316	213-0202-00			2	.SCREW, MACHINE: 2-56 X 0.625 INCH, FLH STL		
					- - - * - - -		
-317	200-1232-00			2	.COVER, ELECT: ROTARY SWITCH	80009	200-1232-00
-318	401-0127-02			2	.ROTOR, ELEC SW:	80009	401-0127-02
-319	129-0301-00			4	.POST, ELEC-MECH: 0.156 HEX X 0.312 L, BRS	80009	129-0301-00
-320	386-2029-00			2	.PLATE, RES MTG:	80009	386-2029-00
-321	384-0995-01			1	.SHAFT, SLIDE SW: 0.125 OD X 0.866" L, W/PINS	80009	384-0995-01
-322	----- -----			1	.CKT BOARD ASSY: FRONT PANEL(SEE AiA1 EPL)		
					(ATTACHING PARTS)		
-323	211-0116-00			7	.SCR, ASSEM WSHR: 4-40 X 0.312 INCH, PNH BRS	83385	OBD
					- - - * - - -		
-324	351-0442-00			1	..GUIDE, CONN PINS:	80009	351-0442-00
-325	136-0252-04			15	..CONTACT, ELEC: 0.188 INCH LONG	22526	75060
-326	136-0269-02			4	..SOCKET, PLUG-IN: 14 CONTACT, LOW CLEARANCE	01295	C931402
-327	136-0263-04			13	..CONTACT, ELEC: FOR 0.025 INCH SQUARE PIN	22526	75377-001
-328	131-1617-01			1	..CONNECTOR, RCPT: W/18-36 CONTACTS	80009	131-1617-01
-329	131-1606-01			1	..CONNECTOR, RCPT: W/22-44 CONTACTS	80009	131-1606-01
-330	131-0608-00			24	..CONTACT, ELEC: 0.365 INCH LONG	22526	47357
-331	136-0260-02			2	..SOCKET, PLUG-IN: 16 CONTACT, LOW CLEARANCE	01295	C931602
-332	407-1572-00			1	..BRACKET, SW: SLIDE, 0.25 OD X 0.5 INCHES LONG	80009	407-1572-00
-333	260-0960-01			1	..SWITCH, SLIDE: 0.5A, 120VDC, CKT BD MT	10389	23-021-043

Fig. & Index No.	Tektronix Part No.	Serial/Model No Eff	Dscont	Qty 1 2 3 4 5	Name & Description	Mfr Code	Mfr Part Number
1-320	386-2029-00			2	.PL, MTG, RESISTOR:	80009	386-2029-00
-321	384-0995-01			1	.SHAFT, SLIDE SW: 0.125 OD X 0.866" L, W/PINS	80009	384-0995-01
-322	----- -----			1	.CKT BOARD ASSY: FRONT PANEL(SEE A1A1 EPL) (ATTACHING PARTS)		
-323	211-0116-00			7	.SCR, ASSEM WSHR: 4-40 X 0.312 INCH, PNR BRS	83385	OBD
					- - - * - - -		
-324	351-0442-00			1	..GUIDE, CONN PINS:	80009	351-0442-00
-325	136-0252-04			15	..SOCKET, PIN TERM: 0.188 INCH LONG	22526	75060
-326	136-0269-02			4	..SOCPET, PLUG-IN: 14 CONTACT, LOW CLEARCE	01295	C931402
-327	136-0263-04			13	..SOCKET, PIN TERM: FOR 0.025 INCH SQUARE PIN	22526	75377-001
-328	131-1617-01			1	..CONNECTOR, RCPT, : W/18-36 CONTACTS	80009	131-1617-01
-329	131-1606-01			1	..CONNECTOR, RCPT, : W/22-44 CONTACTS	80009	131-1606-01
-330	131-0608-00			24	..CONTACT, ELEC: 0.365 INCH LONG	22526	47357
-331	136-0260-02			2	..SOCKET, PLUG-IN: 16 CONTACT, LOW CLEARANCE	01295	C931602
-332	407-1572-00			1	..BRACXET, SWITCH: SLIDE, 0.25 ODX 0.5" LONG	80009	407-1572-00
-333	260-0960-01			1	..SWITCH, SLIDE: O.5A, 120VDC, CKT CD MT	10389	23-021-043
-334	386-1858-08			1	SUBPANEL, FRONT:	80009	386-1458-08
-335	131-0707-00			54	CONTACT, ELEC: 0.48"L, 22-26 AWG WIRE	22526	75691-005
-336	352-0171-00			8	CONN BODY, PL, EL: 1 WIRE BLACK	80009	352-0171-00
-337	352-0169-00			1	CONN BODY, PL, EL: 2 WIRE BLACK	80009	352-0169-00
-338	352-0161-00			3	CONN BODY, PL, EL: 3 WIRE BLACK	80009	352-0161-00
-339	352-0162-00			2	CONN BODY, PL, EL: 4 WIRE BLACK	80009	352-0162-00
-340	352-0163-00			1	CONN BODY, PL, EL: 5 WIRE BLACK	80009	352-0163-00
-341	352-0164-00			1	CONN BODY, PL, EL: 6 WIRE BLACK	80009	352-0164-00
-342	352-0165-01			1	CONN BODY, PL, EL: 7 WIRE BROWN	80009	352-0165-01
	352-0165-05			1	CONN BODY, PL, EL: 7 WIRE GREEN	80009	352-0165-05
-343	175-0825-00			FT	WIRE, ELECTRICAL: 2 WIRE RIBBON	08261	OBD
-344	175-0826-00			FT	WIRE, ELECTRICAL: 3 WIRE RIBBON	80009	175-0826-00
-345	175-0827-00			FT	WIRE, ELECTRICAL: 4 WIRE RIBBON	08261	TEK-175-0827-00
-346	175-0830-00			1	WIRE, ELECTRICAL: 7 WIRE RIBBON	08261	OBD
-347	175-1675-00			1	CA ASSY, SP, ELEC: 50 OHM COAX, 7.75 INCH LONG	80009	175-1675-00

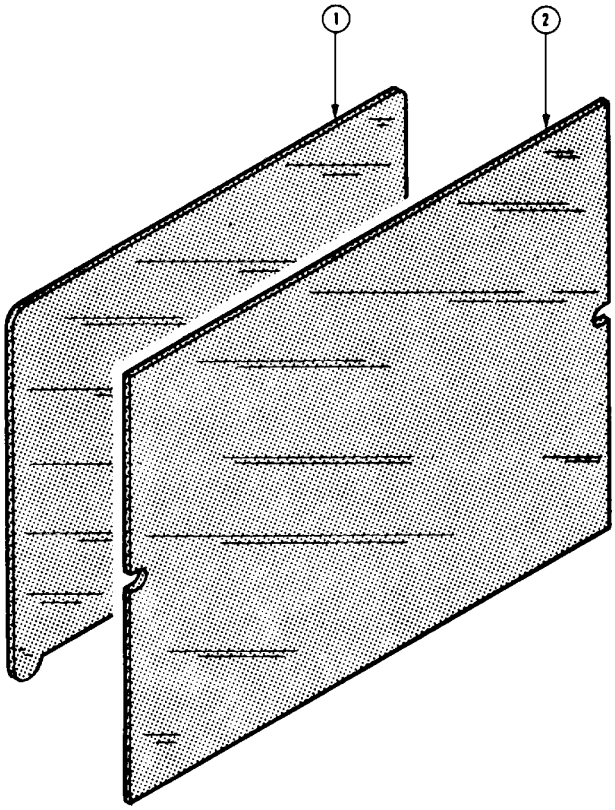

Fig. & Index No.	Tektronix Part No.	Serial/Model No Eff	Dscont	Qty 1 2 3 4 5	Name & Description	Mfr Code	Mfr Part Number
					STANDARD ACCESSORIES		
-1	337-1159-02			1	SHLD, IMPLOSION:MARKED	80009	337-1159-02
-2	378-0684-00			1	FILTER, LT, CRT:BLUE	80009	378-0684-00
	070-1734-00			1	MANUAL, TECH:OPERATORS	80009	070-1734-00
	070-2184-00			1	MANUAL, TECH:INSTRUCTION	80009	070-2184-00
					OPTIONAL ACCESSORIES		
----- -----				1	L1 PL-IN MODULE:50 OHM		
----- -----				1	L2 PL-IN MODULE:75 OHM		
----- -----				1	L3 PL-IN MODULE:50 OHM, 600 OHM, 1MEG OHM/24PF		
----- -----				1	2701:ATTENUATOR, STEP, 50 OHM		
----- -----				1	2703:ATTENUATOR, STEP, 75 OHM		

TEKTRONIX®
committed to technical excellence

MANUAL CHANGE INFORMATION

PRODUCT 7L5
070-2184-00

CHANGE REFERENCE C6/1276
DATE 12-13-76

CHANGE:	DESCRIPTION

TEXT CORRECTION

Page 2-25 Left column, paragraph 2, line 1

CHANGE TO READ:

Table 2-7 illustrates the process using 25 (11001) and 5.....

Page 4-14 Fig. 4-15B

Capacitor labeled C1776 should be labeled C1766.

COMPONENT LOCATIONS FOR DIAGRAM 15

Variable capacitor labeled C1776 should be labeled C1766.

COMPONENT LOCATIONS FOR DIAGRAM 16

Variable capacitor labeled C1776 should be labeled C1766.

PAGE 1 OF 1

TEKTRONIX®
committed to technical excellence

MANUAL CHANGE INFORMATION

PRODUCT 7L5
070-2184-00

CHANGE REFERENCE M30221 &
DATE 1-28-77 M30882

CHANGE:	DESCRIPTION

EFF SN B030524 (M30221)

EFF SN B030640 (M30882)

ELECTRICAL PARTS LIST AND SCHEMATIC CHANGES

CHANGE TO:

S64	260-1693-01	SWITCH,ROTARY:	(M30221)
S66	260-1694-01	SWITCH,ROTARY:	(M30221)
U215	156-0788-00	MICROCIRCUIT,DI:SYNC 4-BIT CNTR W/SYN CLEAR 74LS162	(M30882)

S64 and S66 are located on the FREQ SPAN/DIV RESOLN ASSY and shown on diagram 2 FRONT PANEL.

U215 is located on the TUNE REF board and shown on diagram 9 TUNE REFERENCE.

PAGE 1 OF 1

TEKTRONIX®
committed to technical excellence

MANUAL CHANGE INFORMATION

PRODUCT 7L5
070-2184-00

CHANGE REFERENCE M30533
DATE 11-30-76

CHANGE:	DESCRIPTION

EFF SN B030409

ELECTRICAL PARTS LIST AND SCHEMATIC CHANGES

CHANGE TO:

C1668 281-0503-00 CAP.,FXD,CER DI:8PF,+/-0.25PF,500V

C1668 is located on the VARIABLE RESOLUTION circuit board assembly and shown on diagram 15 VARIABLE RESOLUTION AMPL.

PAGE 1 OF 1

TEKTRONIX®
committed to technical excellence

MANUAL CHANGE INFORMATION

PRODUCT 7L5
070-2184-00

CHANGE REFERENCE M30727
DATE 11-9-76

CHANGE:	DESCRIPTION

EFF SN B030418-up

ELECTRICAL PARTS LIST AND SCHEMATIC CHANGES

CHANGE TO:

C4561	281-0605-00	CAP.,FXD,CER DI:200PF,500V
R4549	321-0289-00	RES.,FXD,FILM:10K OHM,1%,0.125W
R4555	321-0235-00	RES.,FXD,FILM:2.74K OHM,1%,0.125W

The above components are located on the DIGITAL STORAGE circuit board assembly and shown on diagram 21.

PAGE 1 OF 1

TEKTRONIX®
committed to technical excellence

MANUAL CHANGE INFORMATION

PRODUCT 7L5
070-2184-00

CHANGE REFERENCE M31343
DATE 2-24-77

CHANGE:	DESCRIPTION

EFF SN B030529

ELECTRICAL PARTS LIST AND SCHEMATIC CHANGES

CHANGE TO:

C124	290-0527-00	CAP.,FXD,ELCTLT:15UF,20%,20V
C259	290-0527-00	CAP.,FXD,ELCTLT:15UF,20%,20V
R284	321-0764-01	RES.,FXD,FILM:5.09K OHM,(NOMINAL VALUE)SEL

C124, C259, and R284 are located on the A & B OSCILLATOR BOARD and are shown on diagram 7 A & B OSC & CONTROL.

DIAGRAM 13 REF CAL/10.7 MHZ IF/2nd MIXER/2nd LO LOCK

Change REF OSC & CAL schematic as shown below:

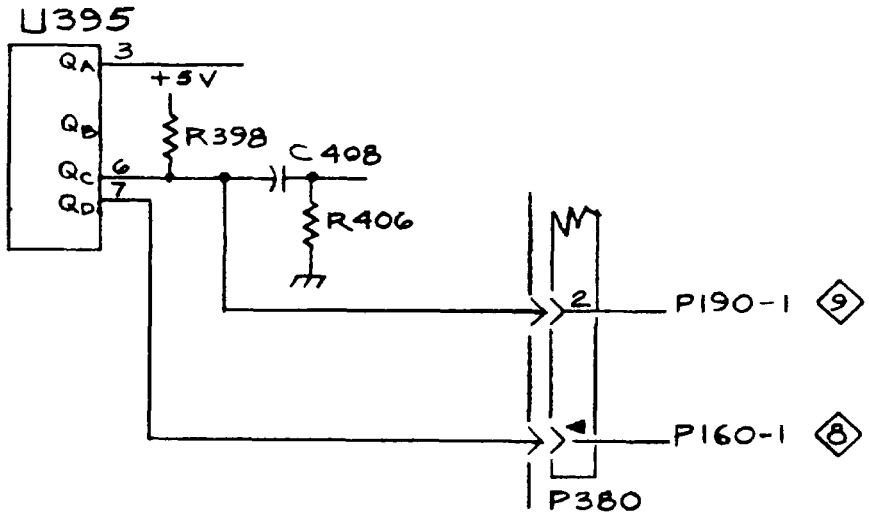

DIAGRAM 18 DETECTOR & VERTICAL OUT (Pin 8 of U2210 should be labeled pin 7)

PAGE 1 OF 1

TEKTRONIX®
committed to technical excellence

MANUAL CHANGE INFORMATION

PRODUCT 7L5
070-2184-00

CHANGE REFERENCE M31771
DATE 6-14-77 REV.

CHANGE:	DESCRIPTION

EFF SN B040702

ELECTRICAL PARTS LIST AND SCHEMATIC CHANGES

CHANGE TO:

A500	670-3586-02	CKT CARD ASSY:SWEEP
A1000A5	670-3595-01	CKT CARD ASSY:250 KHZ AMPLIFIER
A1000 A8A1	670-3593-01	CKT CARD ASSY:VARIABLE RESOLUTION
A2000A2	670-3596-01	CKT CARD ASSY:VERTICAL CONTROL
A4500	670-3928-04	CKT CARD ASSY:DIGITAL STORAGE
R678	315-0391-00	RES.,FXD,CMPSN:390 OHM,5%,0.25W
R1362	315-0391-00	RES.,FXD,CMPSN:390 OHM,5%,0.25W
R1364	315-0202-00	RES.,FXD,CMPSN:2K OHM,5%,0.25W
R1372	315-0391-00	RES.,FXD,CMPSN:390 OHM,5%,0.25W
R1374	315-0202-00	RES.,FXD,CMPSN:2K OHM,5%,0.25W
R1688	315-0202-00	RES.,FXD,CMPSN:2K OHM,5%,0.25W
R1694	315-0391-00	RES.,FXD,CMPSN:390 OHM,5%,0.25W

REMOVE:

CR733	152-0141-02	SEMICOND DEVICE:SILICON,30V,150MA,1N4152
CR2226	152-0246-00	SEMICOND DEVICE:SILICON,400PIV,200MA,CD12676
CR4553	152-0141-02	SEMICOND DEVICE:SILICON,30V,150MA,1N4152
R676	315-0103-00	RES.,FXD,CMPSN:10K OHM,5%,0.25W
R1360	315-0203-00	RES.,FXD,CMPSN:20K OHM,5%,0.25W
R1366	315-0152-00	RES.,FXD,CMPSN:1.5K OHM,5%,0.25W
R1370	315-0203-00	RES.,FXD,CMPSN:20K OHM,5%,0.25W
R1376	315-0152-00	RES.,FXD,CMPSN:1.5K OHM,5%,0.25W

PRODUCT 7L5 CHANGE REFERENCE M31771 DATE 6-14-77

CHANGE:	DESCRIPTION

REMOVE:

R1687	315-0113-00	RES.,FXD,CMPSN:11K OHM,5%,0.25W
R1693	315-0393-00	RES.,FXD,CMPSN:39K OHM,5%,0.25W
R4556	315-0155-00	RES.,FXD,CMPSN:1.5M OHM,5%,0.25W
VR734	152-0217-00	SEMICOND DEVICE:ZENER,0.4W,8.2V,5%,1N756A

ADD:

CR736	152-0075-00	SEMICOND DEVICE:GE,25V,40MA
CR738	152-0075-00	SEMICOND DEVICE:GE,25V,40MA
VR676	152-0149-00	SEMICOND DEVICE:ZENER,0.4W,10V,5%,1N961B
VR1360	152-0149-00	SEMICOND DEVICE:ZENER,0.4W,10V,5%,1N961B
VR1366	152-0662-00	SEMICOND DEVICE:ZENER,0.4W, 5V,1%
VR1370	152-0149-00	SEMICOND DEVICE:ZENER,0.4W,10V,5%,1N961B
VR1376	152-0662-00	SEMICOND DEVICE:ZENER,0.4W, 5V,1%
VR1687	152-0662-00	SEMICOND DEVICE:ZENER,0.4W, 5V,1%
VR1693	152-0149-00	SEMICOND DEVICE:ZENER,0.4W,10V,5%,1N961B
VR2226	152-0306-00	SEMICOND DEVICE:ZENER,9.1V,5%,0.4W,1N960B
VR4553	152-0306-00	SEMICOND DEVICE:ZENER,9.1V,5%,0.4W,1N960B

DIAGRAM 6 FREQ SPAN ATTEN & SWP GEN

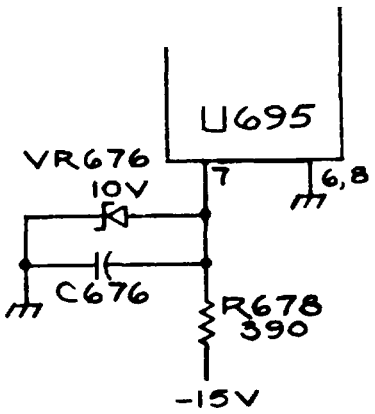

DIAGRAM 18 DETECTOR & VERTICAL OUT

VR2226 replaces CR2226.
The cathode of VR2226 goes to pin 2 of U2210 and the anode to pin 6 of U2210.

DIAGRAM 21 DIGITAL STORAGE

VR4553 replaces CR4553.
The cathode of VR4553 goes to pin 6 of U4541B and the anode to pin 7 of U4541B.

PAGE 2 OF 3

PRODUCT 7L5 CHANGE REFERENCE M31771 DATE 6-14-77 REV.

CHANGE:	DESCRIPTION

SCHEMATIC CHANGES

DIAGRAM 14 250 kHz IF AMPLIFIER - Partial

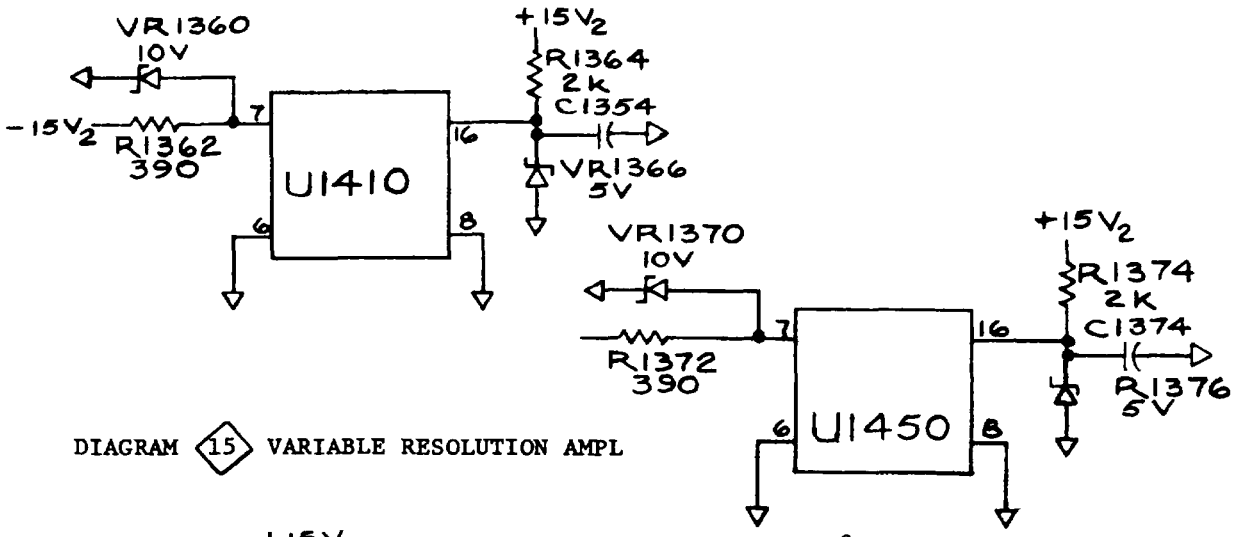

DIAGRAM 15 VARIABLE RESOLUTION AMPL

DIAGRAM 19 HORIZ & VERT DISPLAY PROCESSING- Partial

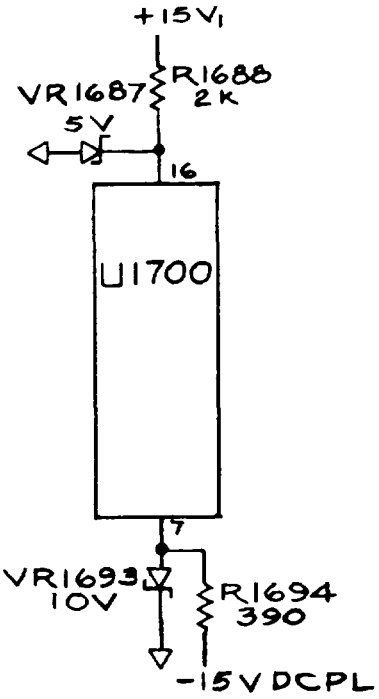

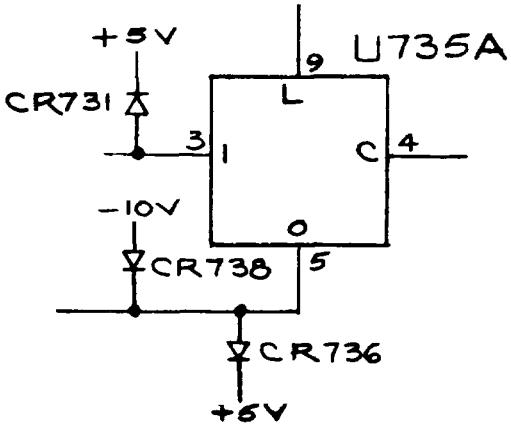

PAGE 3 OF 3

TEKTRONIX®
committed to technical excellence

MANUAL CHANGE INFORMATION

PRODUCT 7L5
070-2184-00

CHANGE REFERENCE M31058
DATE 9-20-77

CHANGE:	DESCRIPTION

EFF SN B050000

ELECTRICAL PARTS LIST AND SCHEMATIC CHANGES

CHANGE TO:

A1A1	670-3587-01	CKT CARD ASSY:FRONT PANEL

ADD:

C15	283-0028-00	CAP.,FXD,CER DI:0.0022UF,20%,50V
P20	131-0993-00	LINK,TERMINAL CONNECTOR
P56	131-0993-00	LINK,TERMINAL CONNECTOR
P700	131-0993-00	LINK,TERMINAL CONNECTOR
R15	315-0226-00	RES.,FXD,CMPSN:22M OHM,5%,0.25W
R664	311-1283-00	RES.,VAR,NONWIR:10K OHM,0.5W
R665	311-1281-00	RES.,VAR,NONWIR:2.5K OHM,0.5W

DIAGRAM 2 FRONT PANEL - Partial

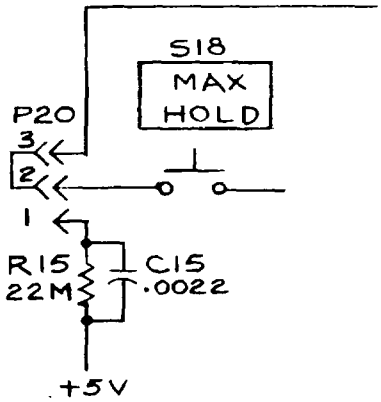

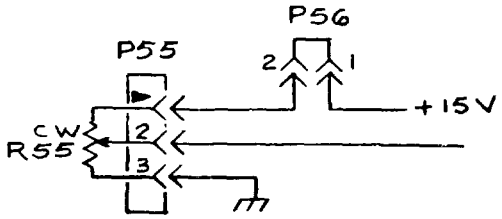

DIAGRAM 4 FREQ SPAN & READOUT - Partial

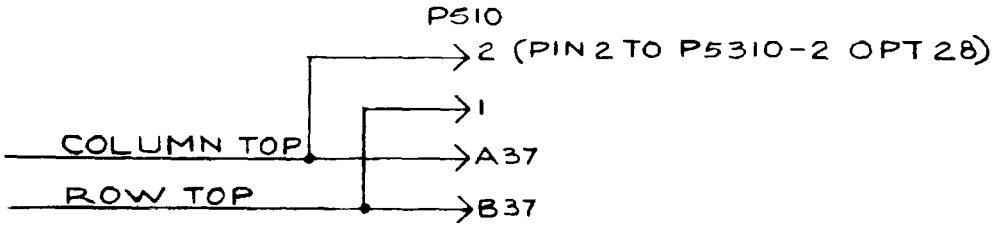

DIAGRAM 5 TRIGGER LOGIC - Partial

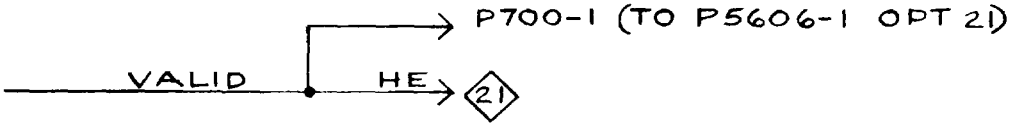

PAGE 1 OF 2

PRODUCT 7L5 CHANGE REFERENCE M31058 DATE 9-20-77

CHANGE:	DESCRIPTION

SCHEMATIC CHANGES

DIAGRAM 6 FREQ SPAN ATTEN & SWP GEN - Partial

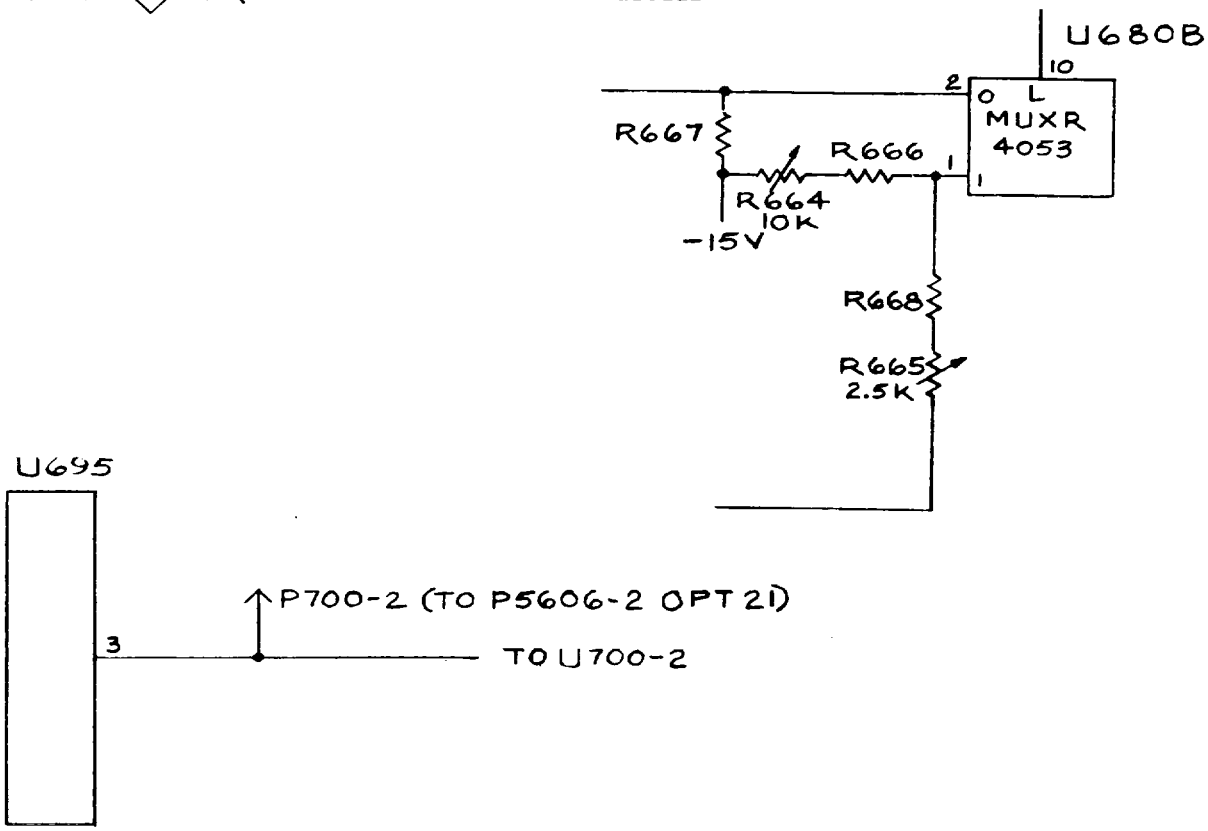

DIAGRAM 15 VARIABLE RESOLUTION AMPL- Partial

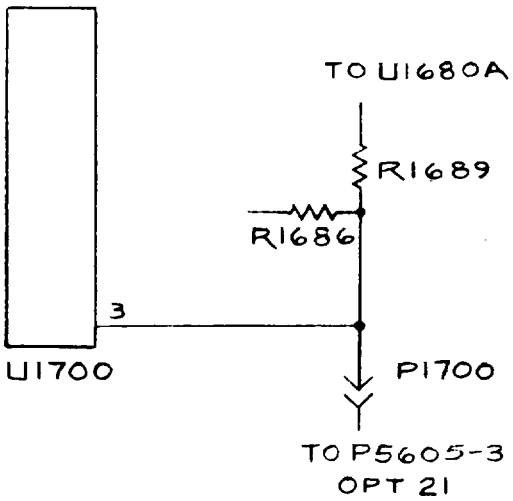

DIAGRAM 19 HORIZ & VERT DISPLAY PROCESSING - Partial

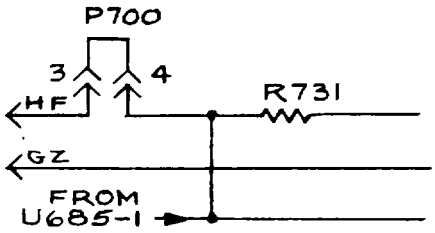

PAGE 2 OF 2

TEKTRONIX®
committed to technical excellence

MANUAL CHANGE INFORMATION

PRODUCT 7L5 Service
070-2184-00

CHANGE REFERENCE M31704
DATE 9-7-77

CHANGE:	DESCRIPTION

EFF SN B030750

ELECTRICAL PARTS LIST AND SCHEMATIC CHANGES

CHANGE TO:

CR9	150-1050-00	LAMP,LED:RED
CR16		
CR19		
CR24		
CR34		
CR38		
CR40		
CR42		
CR44		
CR80		
CR82		
CR84		
CR86		
CR88		
CR90		

The above components are shown on diagram 2 FRONT PANEL.

PAGE 1 OF 1

TEKTRONIX®
committed to technical excellence

MANUAL CHANGE INFORMATION

PRODUCT 7L5
070-2184-00

CHANGE REFERENCE M30999
DATE 11-28-77

CHANGE:	DESCRIPTION

ELECTRICAL PARTS LIST AND SCHEMATIC CHANGES

EFF SN B030490

ADD:

E132	276-0507-00	SHIELDING BEAD,:0.6UH
E134	276-0507-00	SHIELDING BEAD,:0.6UH

DIAGRAM 7 A & B OSC & CONTROL - Partial

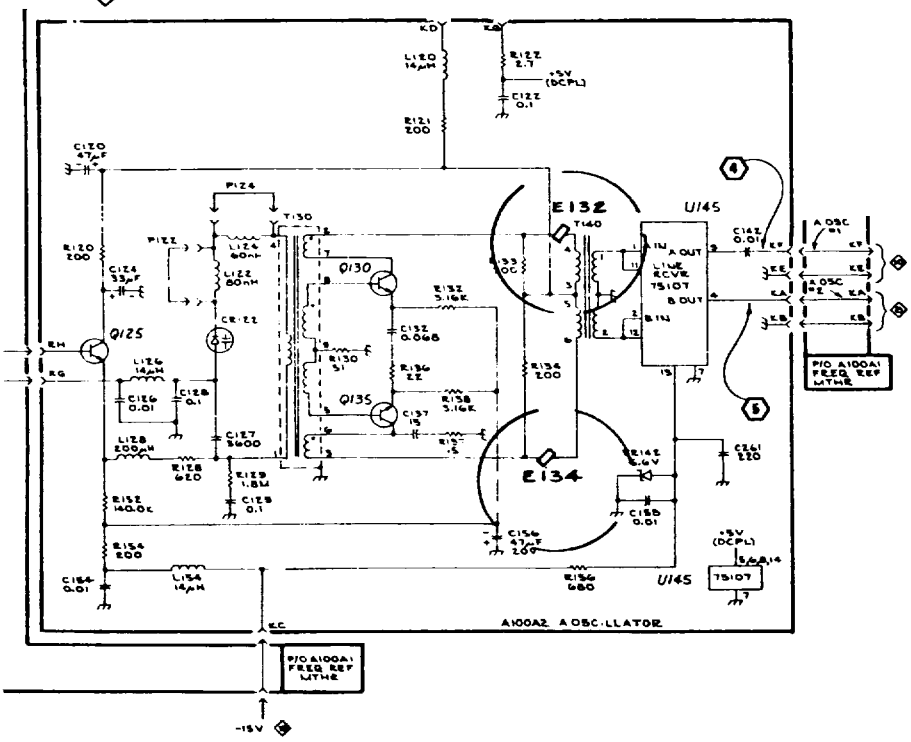

EFF SN B030500

CHANGE TO:

U192	156-0047-00	MICROCIRCUIT,DI:TRIPLE 3-INPUT NAND GATE, 7410

APPENDIX A

REFERENCES

DA Pam 310-4	Index of Technical Publications: Technical Manuals, Technical Bulletins, Supply Manuals (Types 7, 8, and 9), Supply Bulletins, and Lubrication Orders.
DA Pam 310-7	US Army Equipment Index of Modification Work Orders.
TM 11-6625-700-14-1	Operator, Organizational, Direct Support And General Support Maintenance Manual Including Repair Parts and Special Tools Lists (Including Depot Maintenance Repair Parts and Special Tools): Digital Readout Electronic Counter AN/USM-207A (Serial Nos. 1A thru 1100A) (NSN 6625-00-044-3228).
TM 11-6625-1703-15	Operator, Organizational, Direct Support, General Support and Depot Maintenance Manual: Oscilloscope AN/USM-281A (NSN 6625-00-228-2201).
TM 38-750	The Army Maintenance Management System (TAMMS).
TM 750-244-2	Procedures for Destruction of Electronics Materiel To Prevent Enemy Use (Electronics Command).

APPENDIX B

OPERATOR'S ORGANIZATIONAL, DIRECT SUPPORT,

AND GENERAL SUPPORT MAINTENANCE

REPAIR PARTS AND SPECIAL TOOLS LISTS

Refer to Section 7, Replaceable Electrical Parts, and Section 9 for Replaceable Mechanical Parts.

APPENDIX C

MAINTENANCE ALLOCATION

Section I. INTRODUCTION

C-1. General

This appendix provides a summary of the maintenance operations for Spectrum Analyzer PL-1391/U. It authorizes categories of maintenance for specific maintenance functions on repairable items and components and the tools and equipment required to perform each function. This appendix may be used as an aid in planning maintenance operations.

C-2. Maintenance Function

Maintenance functions will be limited to and defined as follows:

a. Inspect. To determine the serviceability of an item by comparing its physical, mechanical, and/or electrical characteristics with established standards through examination.

b. Test. To verify serviceability and to detect incipient failure by measuring the mechanical or electrical characteristics of an item and comparing those characteristics with prescribed standards.

c. Service. Operations required periodically to keep an item in proper operating condition; i.e., to clean (decontaminate), to preserve, to drain, to paint, or to replenish fuel, lubricants, hydraulic fluids, or compressed air supplies.

d. Adjust. To maintain, within prescribed limits, by bringing into proper or exact position, or by setting the operating characteristics to the specified parameters.

e. Align. To adjust specified variable elements of an item to bring about optimum or desired performance.

f. Calibrate. To determine and cause corrections to be made or to be adjusted on instruments or test measuring and diagnostic equipments used in precision measurement. Consists of comparisons of two instruments, one of which is a certified standard of known accuracy, to detect and adjust any discrepancy in the accuracy of the instrument being compared.

g. Install. The act of emplacing, seating, or fixing into position an item, part, module (component or assembly) in a manner to allow the proper functioning of the equipment or system.

h. Replace. The act of substituting a serviceable like type part, subassembly, or module (component or assembly) for an unserviceable counterpart.

i Repair. The application of maintenance services (inspect, test, service, adjust, align, calibrate, replace) or other maintenance actions (welding, grinding, riveting, straightening, facing, remachining, or resurfacing) to restore serviceability to an item by correcting specific damage, fault, malfunction, or failure in a part, subassembly, module (component or assembly), end item, or system.

j. Overhaul. That maintenance effort (service/action) necessary to restore an item to a completely serviceable/operational condition as prescribed by maintenance standards (i.e., DMWR) in appropriate technical publications. Overhaul is normally the highest degree of maintenance per- formed by the Army. Overhaul does not normally return an item to like new condition.

k. Rebuild. Consists of those services/actions necessary for the restoration of unserviceable equipment to a like new condition in accordance with original manufacturing standards. Rebuild is the highest degree of materiel maintenance applied to Army equipment. The rebuild operation includes the act of returning to zero those age measurements (hours, miles, etc.) considered in classifying Army equipments/components.

C-3. Column Entries

a. Column 1, Group Number. Column 1 lists group numbers, the purpose of which is to identify components, assemblies, subassemblies, and modules with the next higher assembly.

b. Column 2, Component/Assembly. Column 2 contains the noun names of components, assemblies, subassemblies, and modules for which maintenance is authorized.

c. Column 3, Maintenance Functions. Column 3 lists the functions to be performed on the item listed in column 2. When items are listed without main- tenance functions, it is solely for purpose of having the group numbers in the MAC and RPSTL coincide.

d. Column 4, Maintenance Category. Column 4 specifies, by the listing of a "work time" figure in the appropriate subcolumn (s), the lowest level of maintenance authorized to perform the function listed in column 3. This figure represents the active time required to perform that maintenance function

at the indicated category of maintenance. If the number or complexity of the tasks within the listed maintenance function vary at different maintenance categories, appropriate "work time" figures will be shown for each category. The number of task-hours specified by the "work time" figure represents the average time required to restore an item (assembly, subassembly, component, module, end item or system) to a serviceable condition under typical field operating conditions. This time includes preparation time, troubleshooting time, and quality assurance/quality control time in addition to the time required to perform the specific tasks identified for the maintenance functions authorized in the maintenance allocation chart. Subcolumns of column 4 are as follows:

C-Operator/Crew
O-Organizational
F-Direct Support
H-General Support
D-Depot

e. Column 5, Tools and Equipment. Column 5 specifies by code, those common tool sets (not individual tools) and special tools, test, and support equipment required to perform the designated function.

f. Column 6, Remarks. Column 6 contains an alphabetic code which leads to the remark in section IV, Remarks, which is pertinent to the item opposite the particular code.

C-4. Tool and Test Equipment Requirements (Sec. III)

a. Tool or Test Equipment Reference Code. The numbers in this column coincide with the numbers used in the tools and equipment column of the MAC. The numbers indicate the applicable tool or test equipment for the maintenance functions.

b. Maintenance Category. The codes in this column indicate the maintenance category allocated the tool or test equipment.

c. Nomenclature. This column lists the noun name and nomenclature of the tools and test equipment required to perform the maintenance functions.

d. National/NATO Stock Number. This column lists the National/NATO stock number of the specific tool or test equipment.

e. Tool Number. This column lists the manufacturer's part number of the tool followed by the Federal Supply Code for manufacturers (5-digit) in parentheses.

C-5. Remarks (Sec IV)

a. Reference Code. This code refers to the appropriate item in section II, column 6.

b. Remarks. This column provides the required explanatory information necessary to clarify items appearing in section II.

Section II. MAINTENANCE ALLOCATION CHART FOR

SPECTRUM ANALYZER PL-1391/U

(1) Group number	(2) Component/assembly	(3) Maint. function	(4) Maint. category C	O	F	H	D	(5) Tool/ equipment	(6) Remarks
00	SPECTRUM ANALYZER PL-1391/U	Inspect		1.0				Visual	
		Service		1.0				10	
		Test				2.0		1 thru 8	
		Repair				1.0		9	
		Overhaul					2.0	9	
01	FRONT PANEL	Repair				0.5		9	
02	I. F. MODULE ASSEMBLY	Repair				0.5		9	
03	DIGITAL AVERAGING CIRCUIT BOARD	Repair				0.5		9	
04	DIGITAL STORAGE CIRCUIT BOARD	Repair				0.5		9	
05	SWEEP BOARD	Repair				0.5		9	
06	R. F. MODULE	Repair				0.5		9	
07	TRANSVERSE INTERFACE CIRCUIT BOARD	Repair				0.5		9	

SECTION III TOOL AND TEST EQUIPMENT REQUIREMENTS FOR SPECTRUM ANALYZER PL-1391/U

TOOL OR TEST EQUIPMENT REF CODE	MAINTENANCE CATEGORY	NOMENCLATURE	NATIONAL/NATO STOCK NUMBER	TOOL NUMBER
1	H,D	OSCILLOSCOPE, AN/IUM-281C	6625-00-106-9622	
2	H,D	PLUG AMPLIFIER, AM-6880	6625-00-185-7817	
3	H,D	SIGNAL GENERATOR, SG-1128	6625-00-50-7590	
4	H,D	COMNTER ELECTRONIC DIGITAL READOUT, AN/USM-207A	6625-00-044-3228	
5	H,D	GENERATOR, TIME MARK, AN/USM-108B	6625-00-038-7371	
6	H,D	GENERATOR, SIGNAL, SC1112()2/U	6625-00-500-6525	
7	H,D	ATENRUATOR, CN-764	6625-00-020-2990	
8	H,D	ATENRUATOR, C0-801	6625-00-557-7860	
9	H,D	TOOL KIT, TK-100/G	5180-00-605-0079	
10	0	TOOL AND TEST EQUIPMENT AVAILABLE TO THE ORGANIZATIONAL REPAIRMAN BECAUSE OF HIS ASSIGNED MISSION.		

*U.S. GOVERNMENT PRINTING OFFICE: 1994 - 300-421/822

SECTION 8

DIAGRAMS AND CIRCUIT BOARD ILLUSTRATIONS

Symbols and reference Designators

Graphic symbols for electrical and logic symbols, used on the diagrams, are based on ANSI Y32.2, 1970, and ANSI Y32.14 1973, "American National Standards Institute, "Logic symbols depict the logic function of the device in positive logic. Copies of these standards can be obtained from the Institute of Electrical and Electronics Engineers, 345, East 47th Street, New York, N.Y., 11017. Exceptions and additions are shown on this sample diagram. These conform or are based on the manufacturers data sheet and industry trends.

Resistor values are in ohms, unless noted otherwise, and the Ω symbol is omitted. Capacitor values ≥1 (e.g. 10) are in picofarads (pF) and values < 1 (e.g. 0.01) are in microfarads unless otherwise noted.

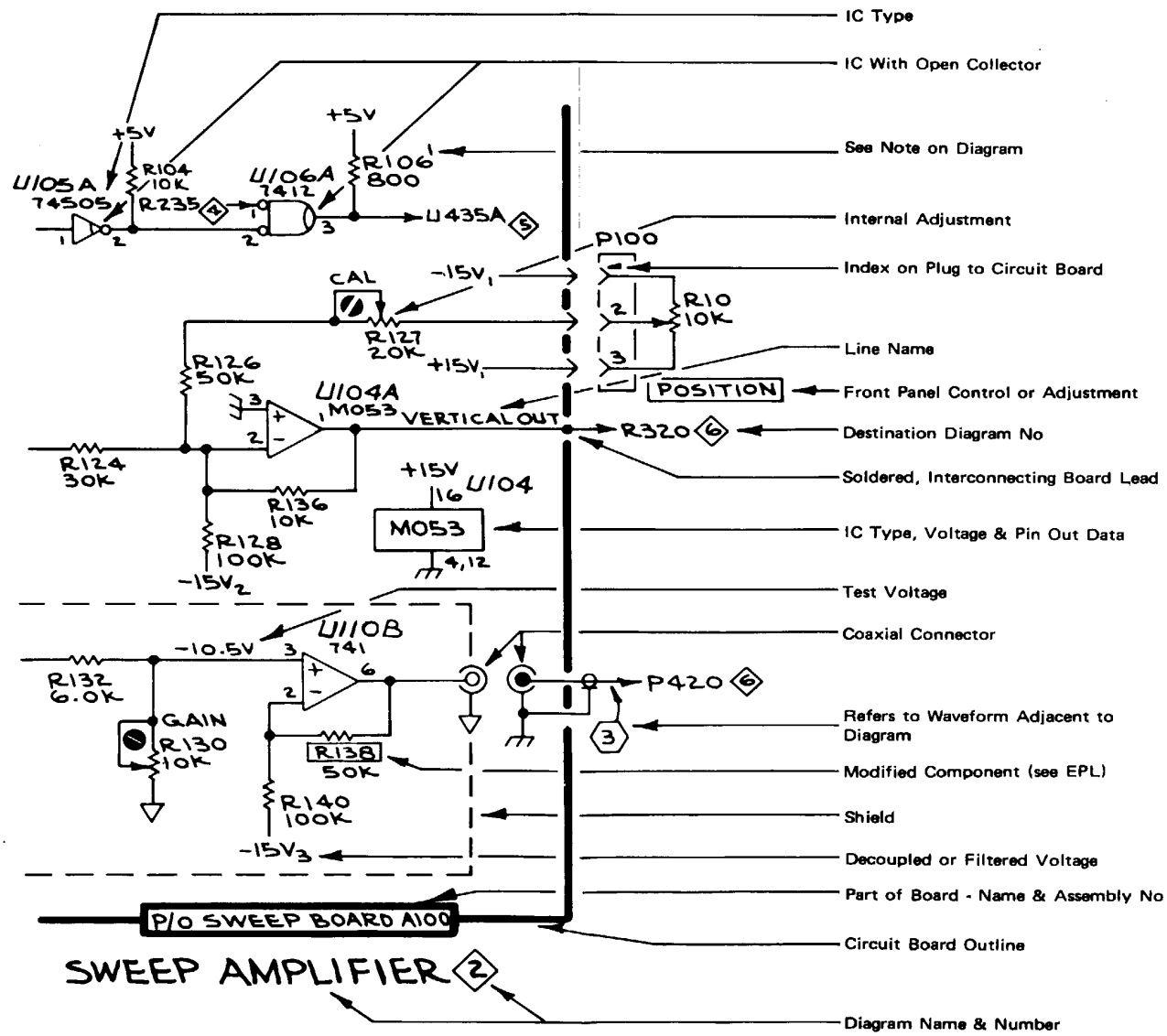

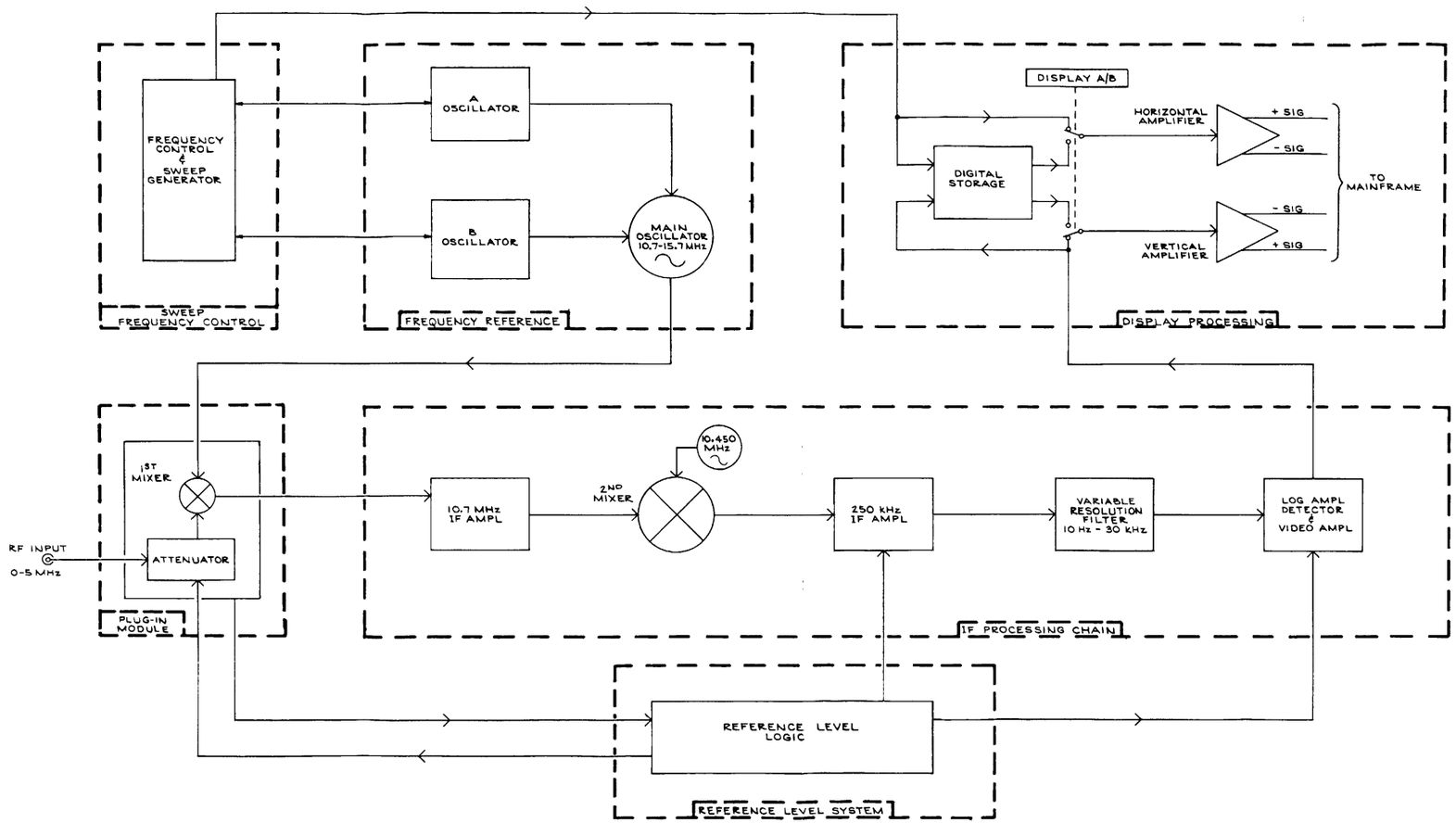

7L5 2184-38 FUNCTIONAL BLOCK DIAGRAM 1 1175 DJ

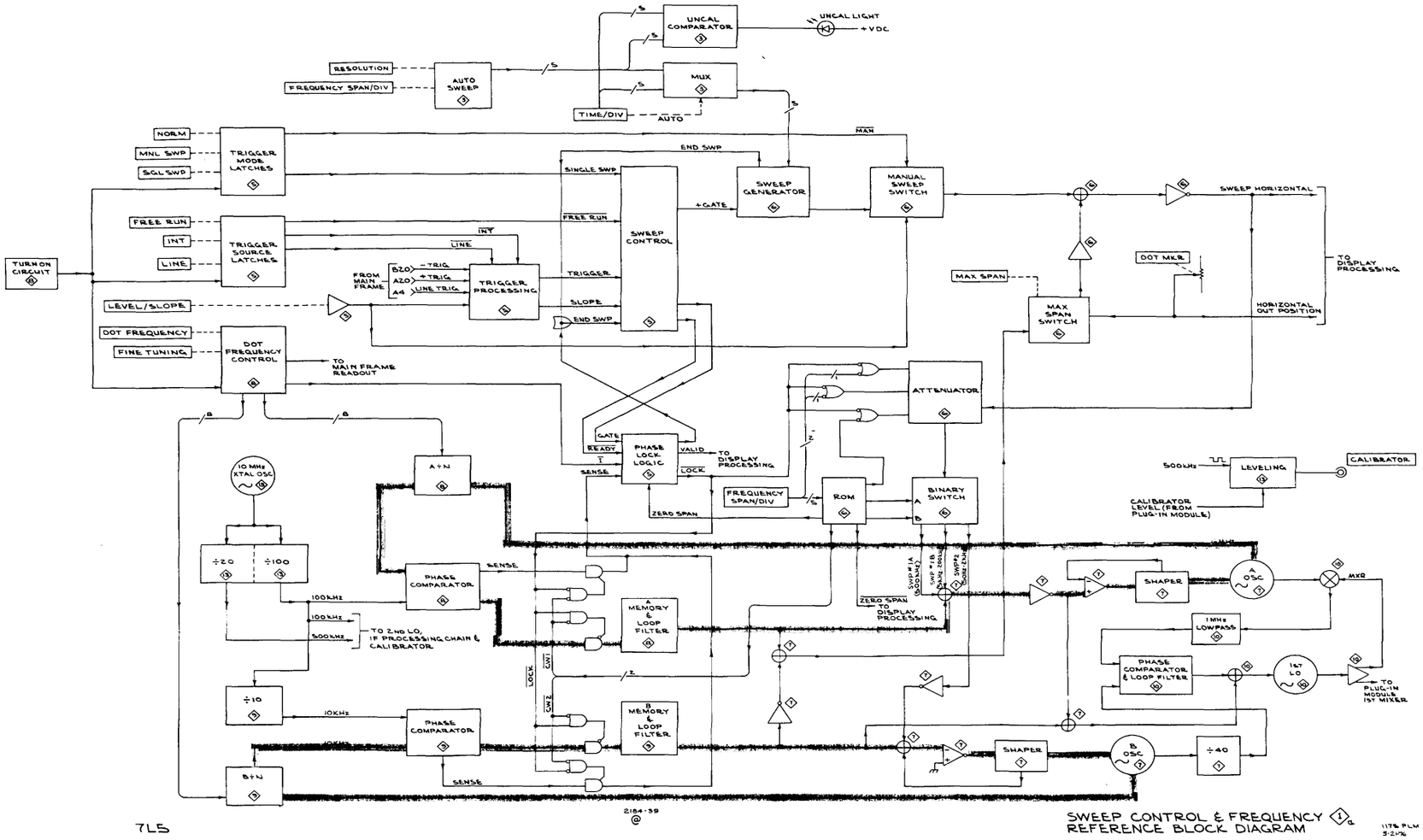
UNCAL COMPARATOR
UNCAL LIGHT
+VDC
RESOLUTION
FREQUENCY SPAN/DIV
AUTO SWEEP
MUX
TIME/DIV
AUTO
NORM
MNL SWP
SGL SWP
TRIGGER MODE LATCHES
MAN
END SWP
SINGLE SWP
SWEEP GENERATOR
MANUAL SWEEP SWITCH
SWEEP HORIZONTAL
FREE RUN
INT
LINE
TRIGGER SOURCE LATCHES
SWEEP CONTROL
+GATE
TURN ON CIRCUIT
FROM MAIN FRAME
B20
A20
A4
-TRIG
+TRIG
LINE TRIG
TRIGGER PROCESSING
TRIGGER
SLOPE
END SWP
DOT MKR
TO DISPLAY PROCESSING
MAX SPAN
MAX SPAN SWITCH
HORIZONTAL OUT POSITION
LEVEL/SLOPE
DOT FREQUENCY
FINE TUNING
DOT FREQUENCY CONTROL
TO MAIN FRAME READOUT
ATTENUATOR
GATE
READY
PHASE LOCK LOGIC
VALID
LOCK
SENSE
TO DISPLAY PROCESSING
10 MHz XTAL OSC
A÷N
FREQUENCY SPAN/DIV
ROM
BINARY SWITCH
ZERO SPAN
500KHz
LEVELING
CALIBRATOR
CALIBRATOR LEVEL (FROM PLUG-IN MODULE)
÷20
÷100
PHASE COMPARATOR
100KHz
500KHz
TO 2ND LO, IF PROCESSING CHAIN & CALIBRATOR
A MEMORY & LOOP FILTER
ZERO SPAN TO DISPLAY PROCESSING
SHAPER
A OSC
MXR
1MHz LOWPASS
PHASE COMPARATOR & LOOP FILTER
1ST LO
TO PLUG-IN MODULE 1ST MIXER
÷10
10KHz
B MEMORY & LOOP FILTER
B OSC
÷40
B÷N
7L5
2184-39
SWEEP CONTROL & FREQUENCY REFERENCE BLOCK DIAGRAM

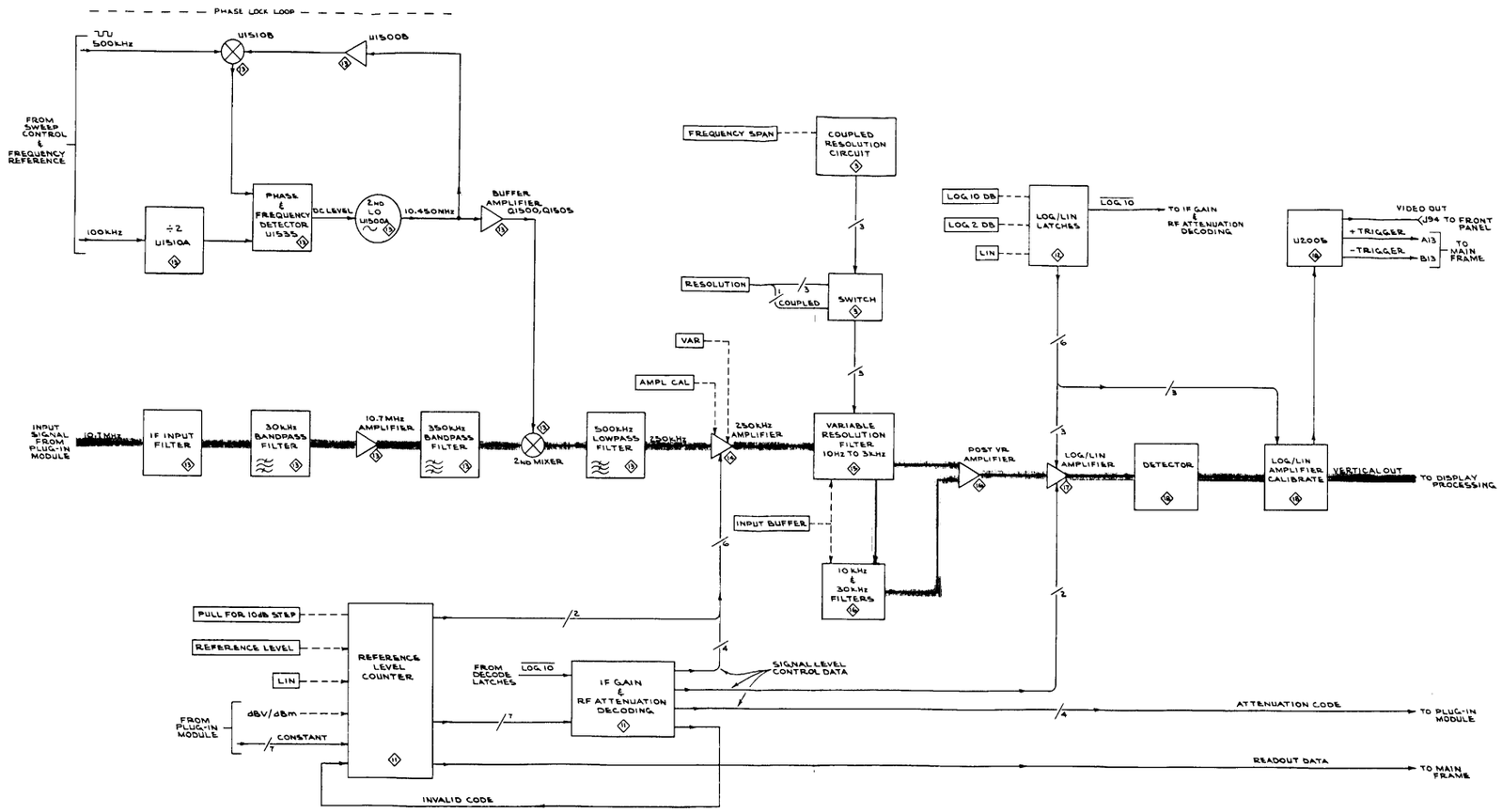

7L5

IF PROCESSING CHAIN 1b
BLOCK DIAGRAM

11T5 PLM

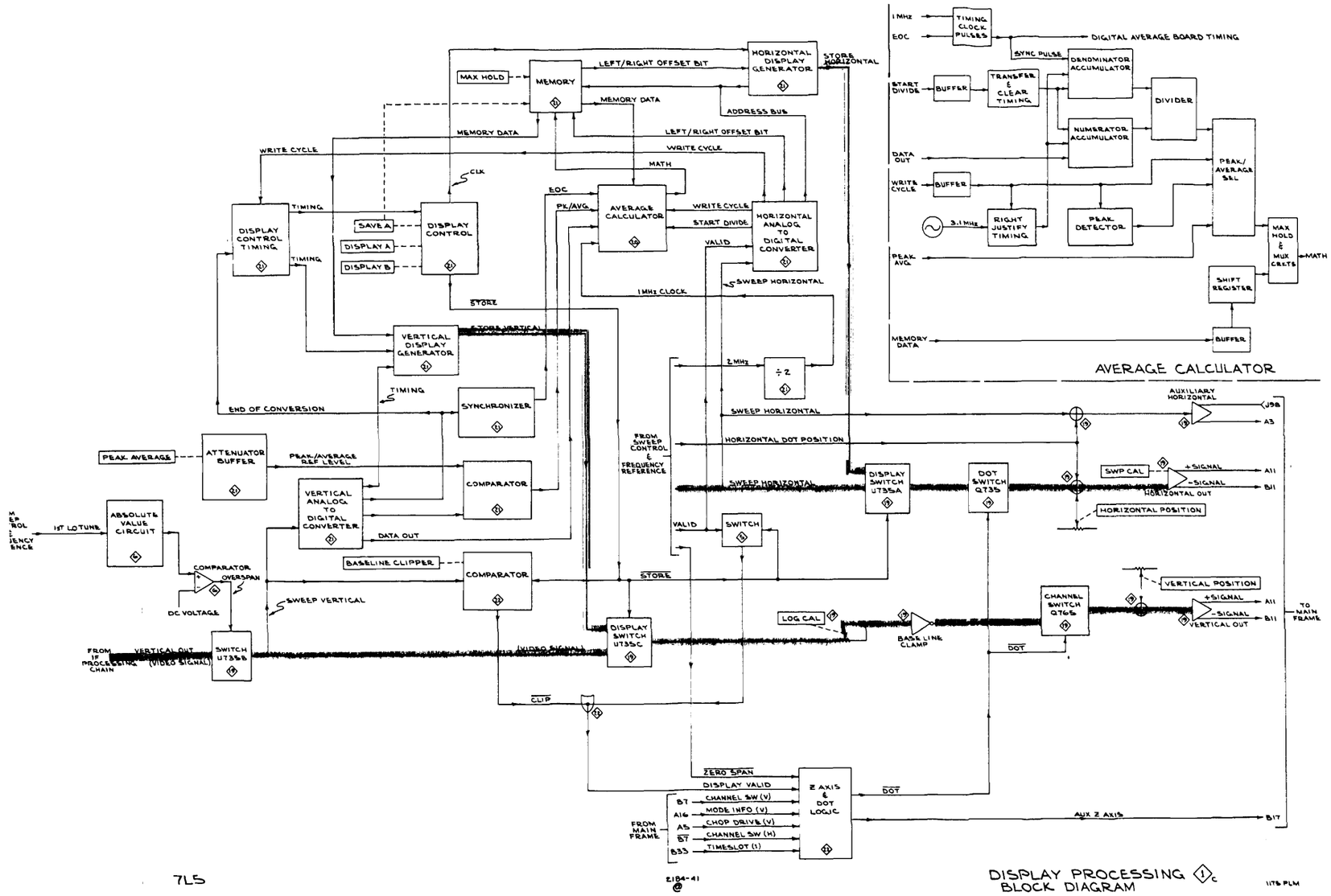
MEMORY
MAX HOLD
LEFT/RIGHT OFFSET BIT
MEMORY DATA
HORIZONTAL DISPLAY GENERATOR
STORE HORIZONTAL
ADDRESS BUS
WRITE CYCLE
CLK
MATH
EOC
PK/AVG
AVERAGE CALCULATOR
START DIVIDE
VALID
HORIZONTAL ANALOG TO DIGITAL CONVERTER
SWEEP HORIZONTAL
1MHz CLOCK
DISPLAY CONTROL TIMING
TIMING
SAVE A
DISPLAY A
DISPLAY B
DISPLAY CONTROL
STORE
VERTICAL DISPLAY GENERATOR
STORE VERTICAL
END OF CONVERSION
SYNCHRONIZER
PEAK AVERAGE
ATTENUATOR BUFFER
PEAK/AVERAGE REF LEVEL
VERTICAL ANALOG TO DIGITAL CONVERTER
COMPARATOR
DATA OUT
BASELINE CLIPPER
ABSOLUTE VALUE CIRCUIT
1ST LO TUNE
COMPARATOR OVERSPAN
DC VOLTAGE
SWEEP VERTICAL
FROM IF PROCESSING CHAIN
VERTICAL OUT (VIDEO SIGNAL)
SWITCH U735B
DISPLAY SWITCH U735C
CLIP
2MHz
÷2
FROM SWEEP CONTROL & FREQUENCY REFERENCE
HORIZONTAL DOT POSITION
DISPLAY SWITCH U735A
DOT SWITCH Q735
SWITCH
LOG CAL
BASE LINE CLAMP
DOT
CHANNEL SWITCH Q765
VERTICAL POSITION
+SIGNAL
-SIGNAL
VERTICAL OUT
HORIZONTAL OUT
HORIZONTAL POSITION
SWP CAL
AUXILIARY HORIZONTAL
J5B
A3
A11
B11
TO MAIN FRAME
ZERO SPAN
DISPLAY VALID
CHANNEL SW (V)
MODE INFO (V)
CHOP DRIVE (V)
CHANNEL SW (H)
TIMESLOT (1)
FROM MAIN FRAME
Z AXIS & DOT LOGIC
AUX Z AXIS
B17
1MHz
EOC
TIMING CLOCK PULSES
DIGITAL AVERAGE BOARD TIMING
SYNC PULSE
START DIVIDE
BUFFER
TRANSFER & CLEAR TIMING
DENOMINATOR ACCUMULATOR
DIVIDER
NUMERATOR ACCUMULATOR
DATA OUT
WRITE CYCLE
3.1MHz
RIGHT JUSTIFY TIMING
PEAK DETECTOR
PEAK/AVERAGE SEL
MAX HOLD & MUX CRCTS
MATH
PEAK AVG
SHIFT REGISTER
MEMORY DATA
AVERAGE CALCULATOR
7L5
2184-41
DISPLAY PROCESSING 1c BLOCK DIAGRAM
1176 PLM

TEKTRONIX® committed to technical excellence

MANUAL CHANGE INFORMATION

PRODUCT 7L5 070-2184-00 | CHANGE REFERENCE M31058 | DATE 9-20-77

CHANGE:	DESCRIPTION

EFF SN B050000

ELECTRICAL PARTS LIST AND SCHEMATIC CHANGES

CHANGE TO:

A1A1	670-3587-01	CKT CARD ASSY:FRONT PANEL

ADD:

C15	283-0028-00	CAP.,FXD,CER DI:0.0022UF,20%,50V
P20	131-0993-00	LINK,TERMINAL CONNECTOR
P56	131-0993-00	LINK,TERMINAL CONNECTOR
P700	131-0993-00	LINK,TERMINAL CONNECTOR
R15	315-0226-00	RES.,FXD,CMPSN:22M OHM,5%,0.25W
R664	311-1283-00	RES.,VAR,NONWIR:10K OHM,0.5W
R665	311-1281-00	RES.,VAR,NONWIR:2.5K OHM,0.5W

DIAGRAM 2 FRONT PANEL - Partial

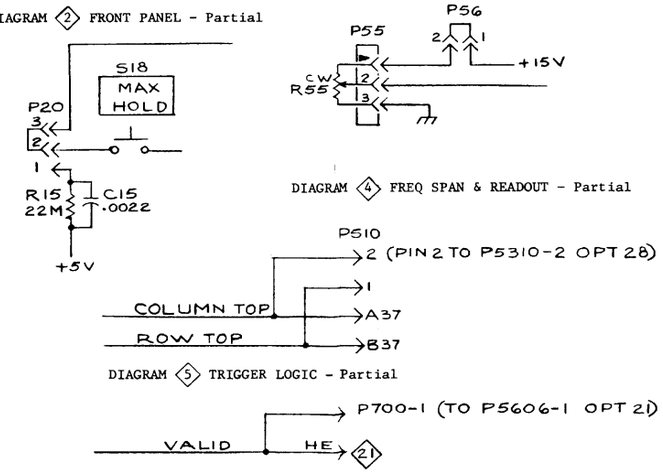

DIAGRAM 4 FREQ SPAN & READOUT - Partial

DIAGRAM 5 TRIGGER LOGIC - Partial

PAGE 1 OF 2

10-9

7L5

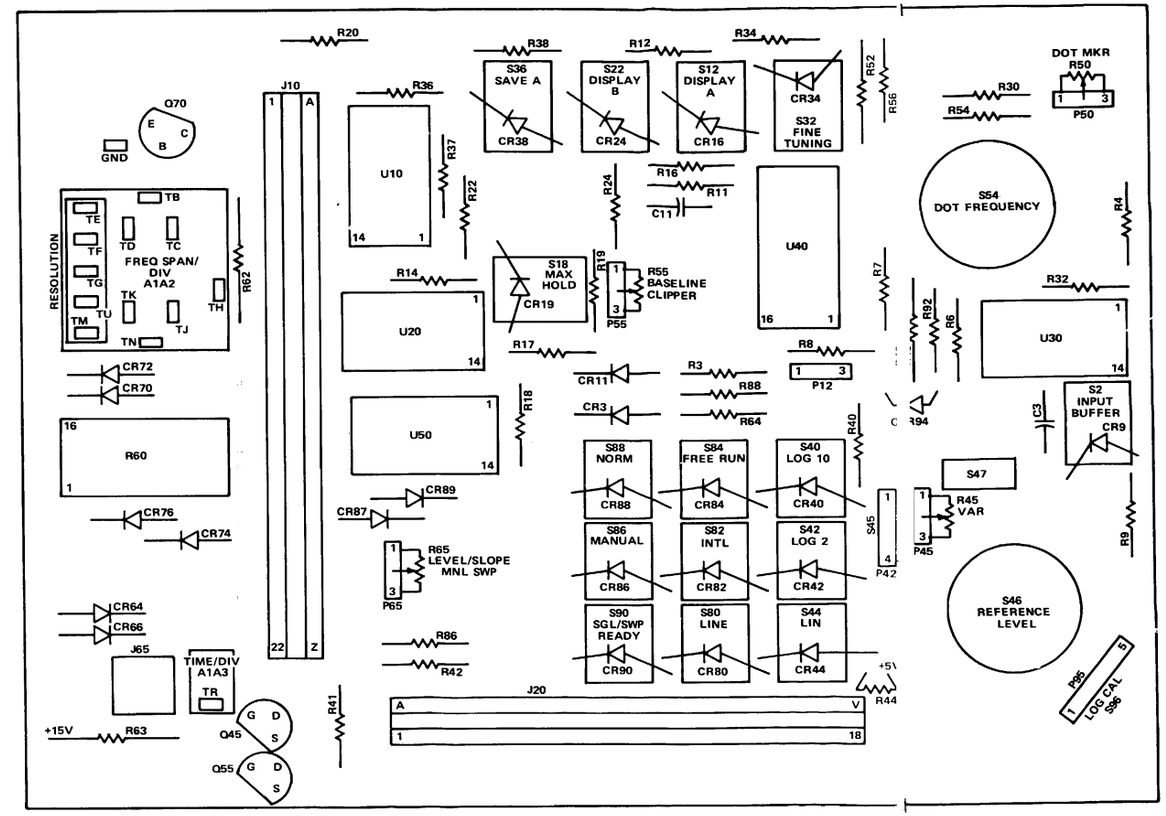

A1A1 Front Panel

@

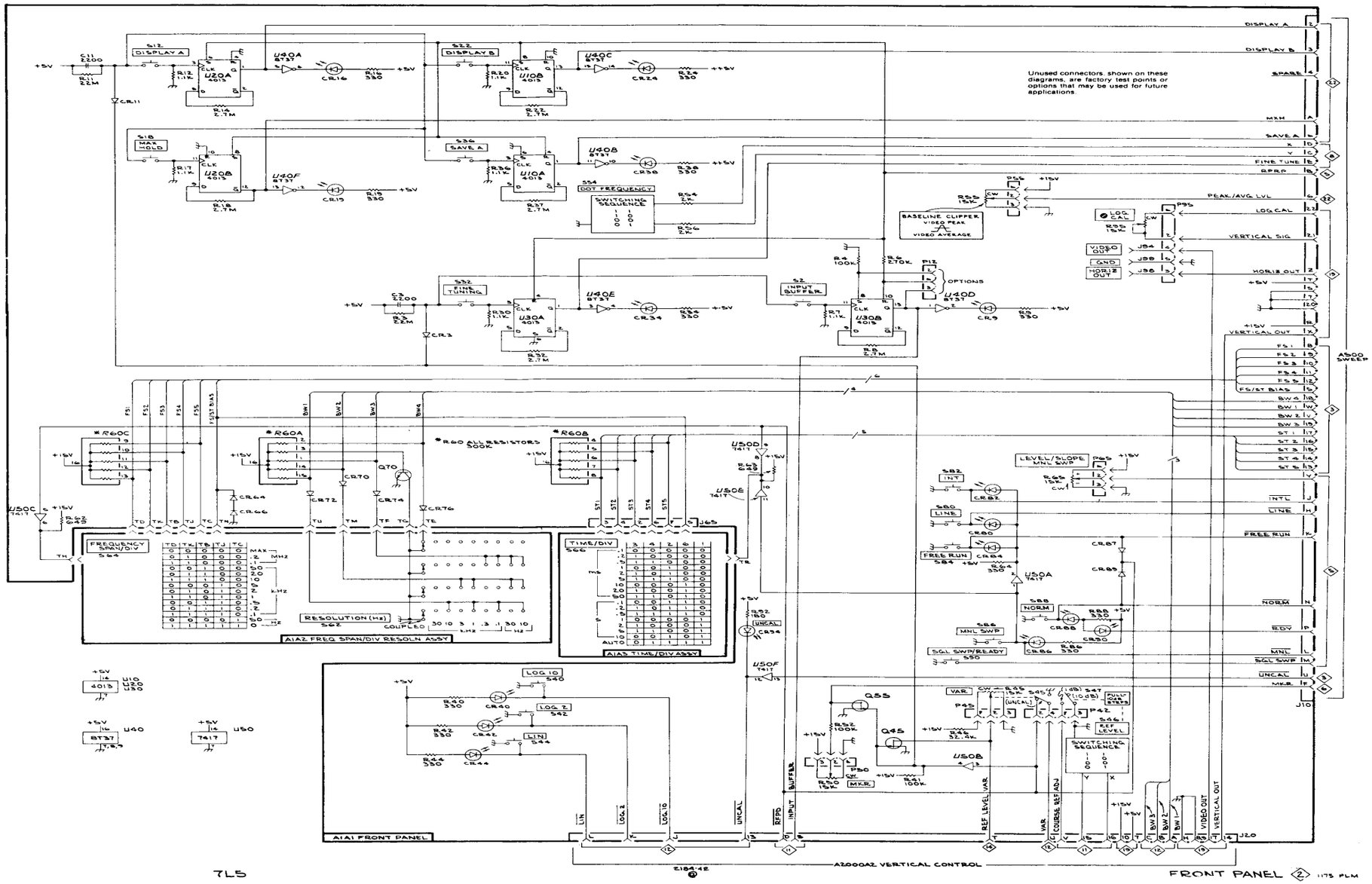
Unused connectors, shown on these diagrams, are factory test points or options that may be used for future applications.
DISPLAY A
DISPLAY B
SPARE
MXM
SAVE A
FINE TUNE
QPRP
PEAK/AVG LVL
LOG CAL
VERTICAL SIG
HORIZ OUT
VERTICAL OUT
FS1
FS2
FS3
FS4
FS5
FS/ST BIAS
BW 4
BW 1
BW 2
BW 3
ST 1
ST 2
ST 3
ST 4
ST 5
INTL
LINE
FREE RUN
NORM
RDY
MNL
SGL SWP
UNCAL
MKR
A500 SWEEP
A1A2 FREQ SPAN/DIV RESOLN ASSY
A1A3 TIME/DIV ASSY
A1A1 FRONT PANEL
A2000A2 VERTICAL CONTROL
FRONT PANEL

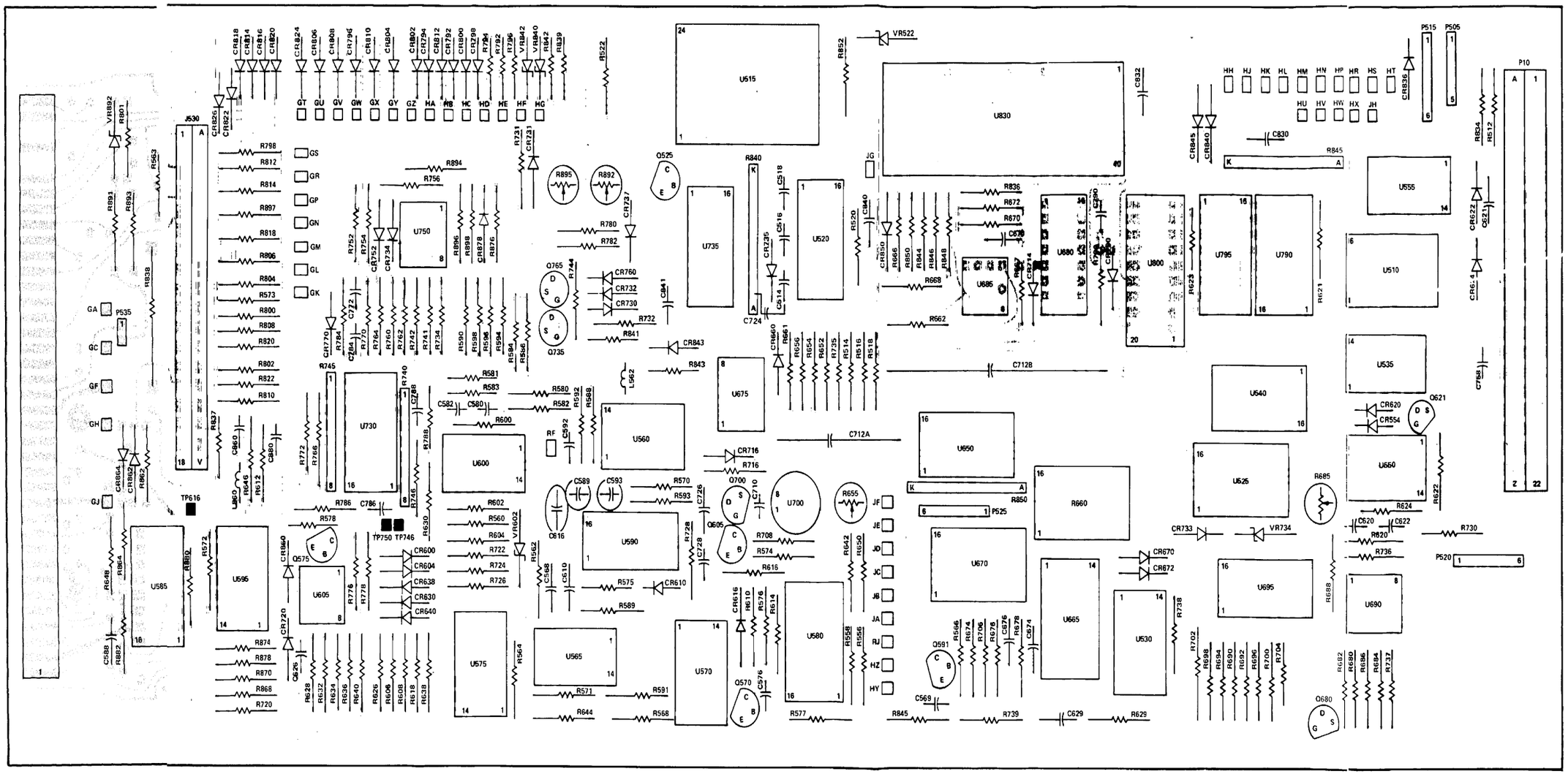

A500 SWEEP

A1A1 Front Panel component location shown on back of Diagram ① c

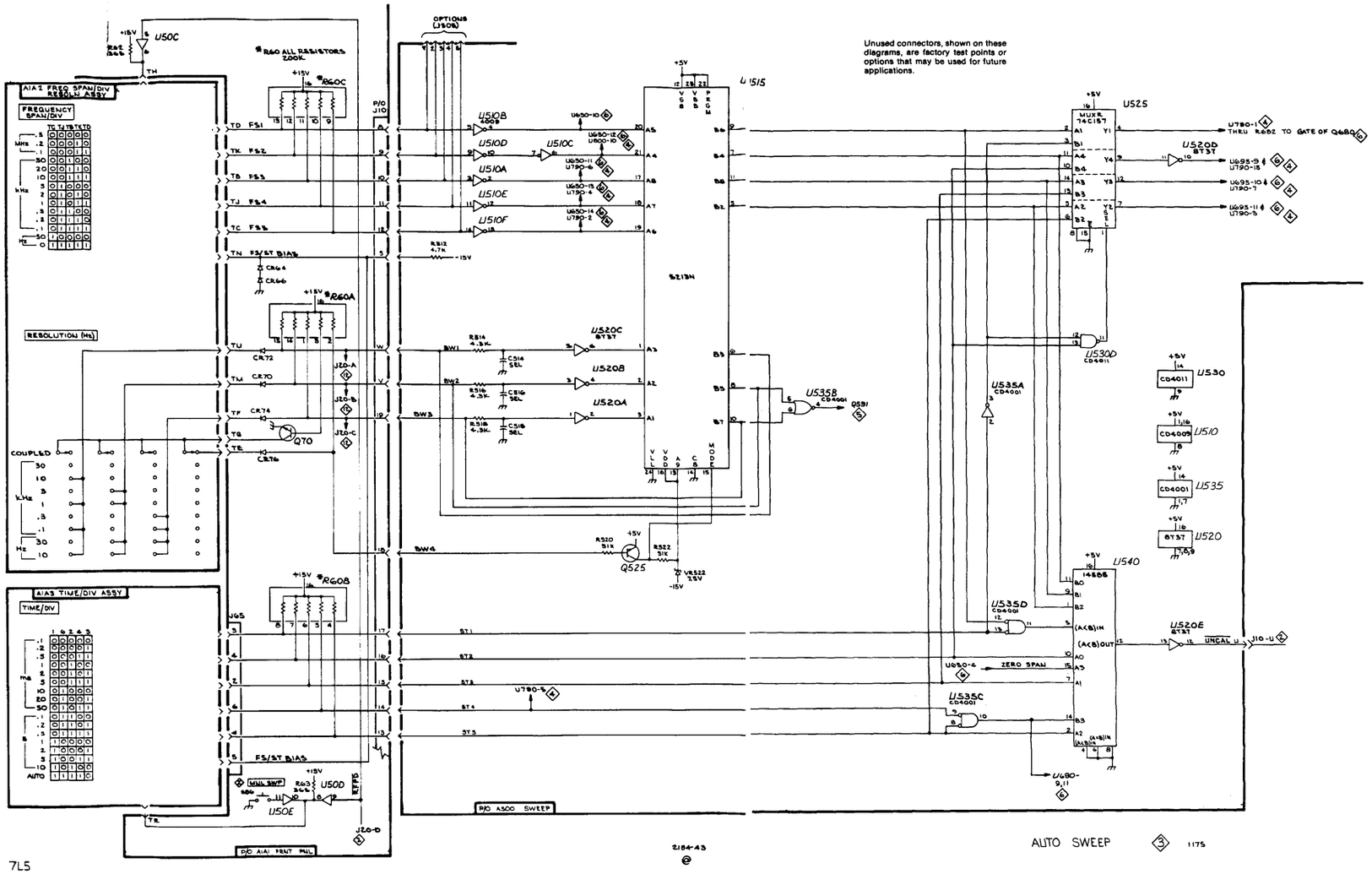
Unused connectors, shown on these diagrams, are factory test points or options that may be used for future applications.
A1A2 FREQ SPAN/DIV RESOLN ASSY
FREQUENCY SPAN/DIV
RESOLUTION (Hz)
COUPLED
A1A3 TIME/DIV ASSY
TIME/DIV
AUTO
U50C
U50D
U50E
U510B
U510D
U510A
U510E
U510F
U510C
U515
U520C
U520B
U520A
U525
U520D
U530
U510
U535
U520
U540
U520E
U535A
U535B
U535C
U535D
U300
U358
Q70
Q525
ZERO SPAN
UNCAL
AUTO SWEEP
P/O A500 SWEEP
P/O A1A1 FRONT PNL
7L5
2184-43

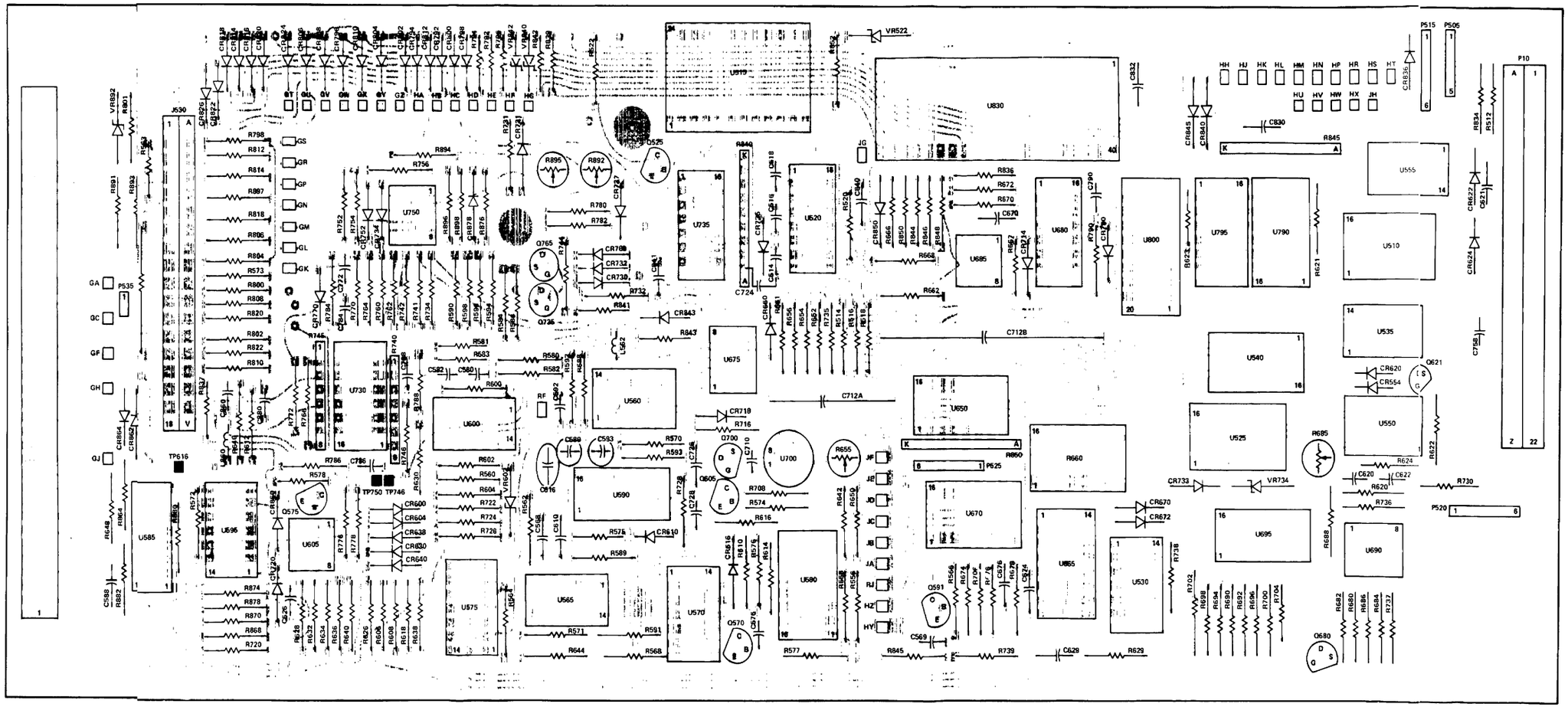

A500 SWEEP

A3000 TRANSVERSE/Vertical Interface component location shown on back of Diagram 21

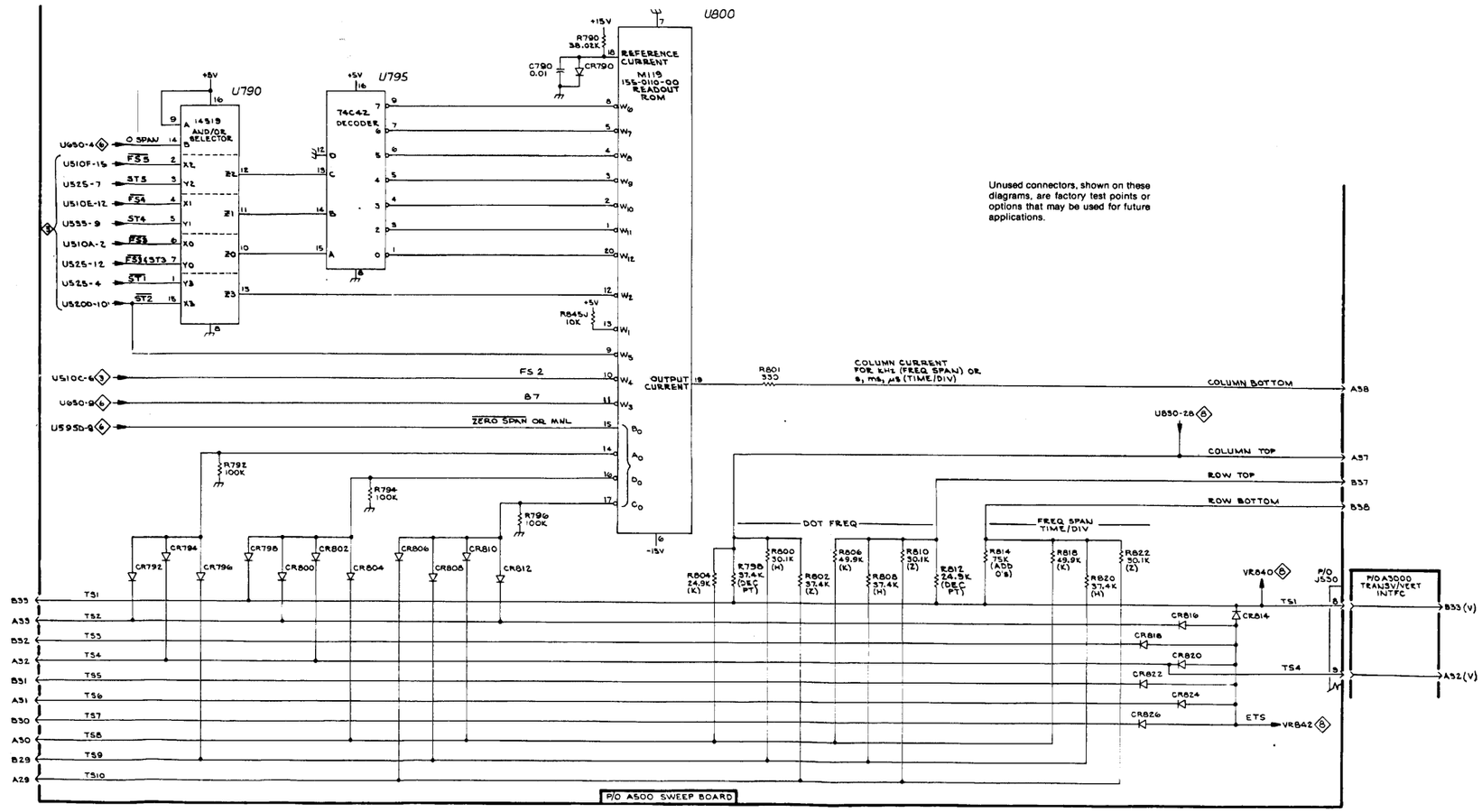

7L5

2184-44

FREQ SPAN & READOUT 4 1175 DJ

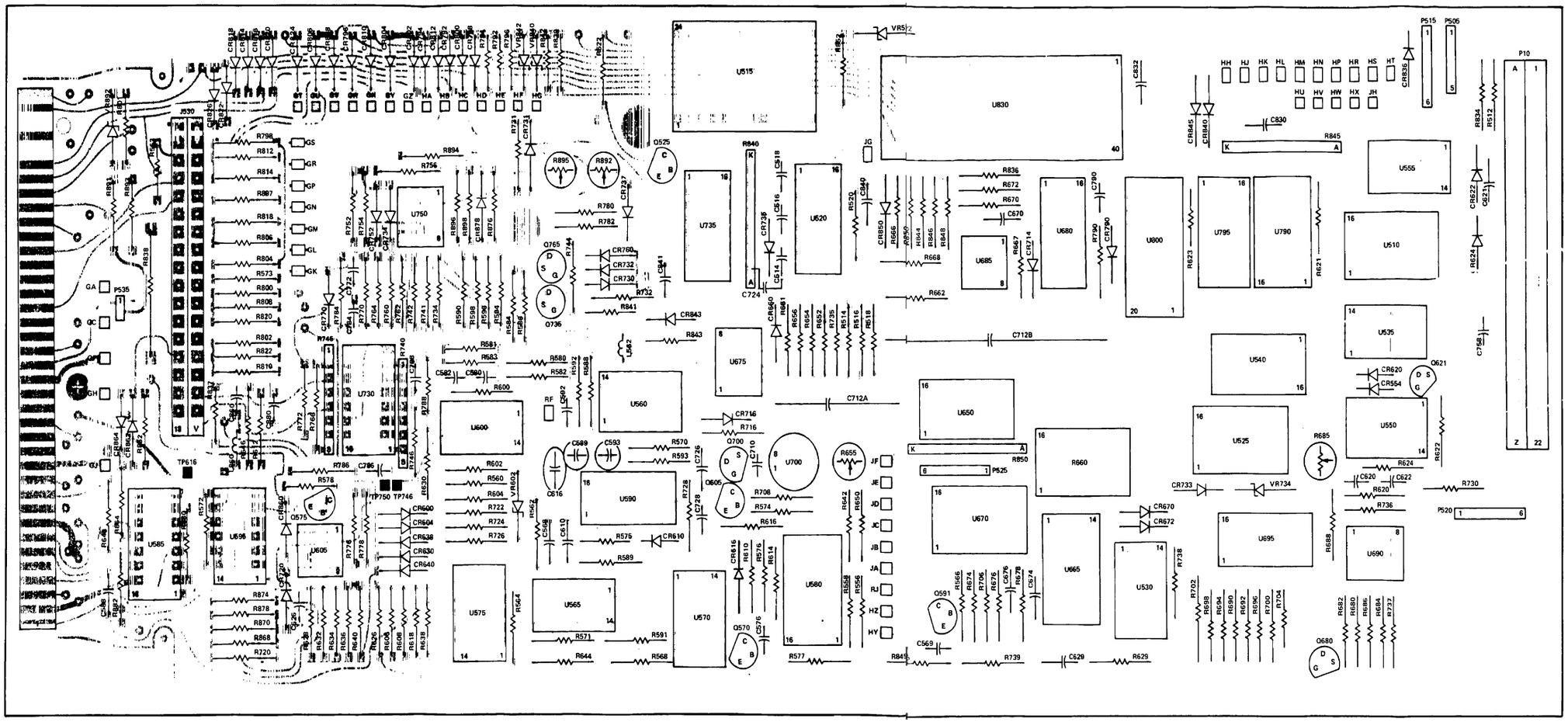

A500 SWEEP

A1A1 Front Panel component location shown on back of Diagram ① c. A100A1 Frequency Reference Mother component location shown on back of Diagram 22. A3000 Transverse/Vertical Interface component location shown on back of Diagram 21.

Waveforms shown on this diagram were obtained under the following conditions:

The oscilloscope mainframe contained two dual trace vertical amplifier units (e.g. 7A18) and one time base unit (e.g. 7B70). A C-50 oscilloscope camera was used. Time/Div and Volts/Div settings are indicated on the waveform. The triggering source is internal or indicated with the waveform.

The Digital Averaging circuit board for the 7L5 was positioned to the side as shown in the Calibration section (Fig. 4-20). Pertinent 7L5 control settings are also indicated with the waveform.

1

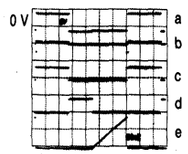

Max Span, triggered on +Gate:
a. Holdoff at U565A, pin 2
b. Sense at U565D, pin 9
c. Trigger Inhibit at U590B, pin 20
d. Output at U590A, pin 6
e. Sweep Output at U700, pin 6 - see 6

2

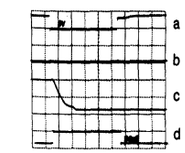

Zero Span, triggered on +Gate:
a. +Gate
b. U575A, pin 14
c. U700, pin 6
d. U570A, pin 1

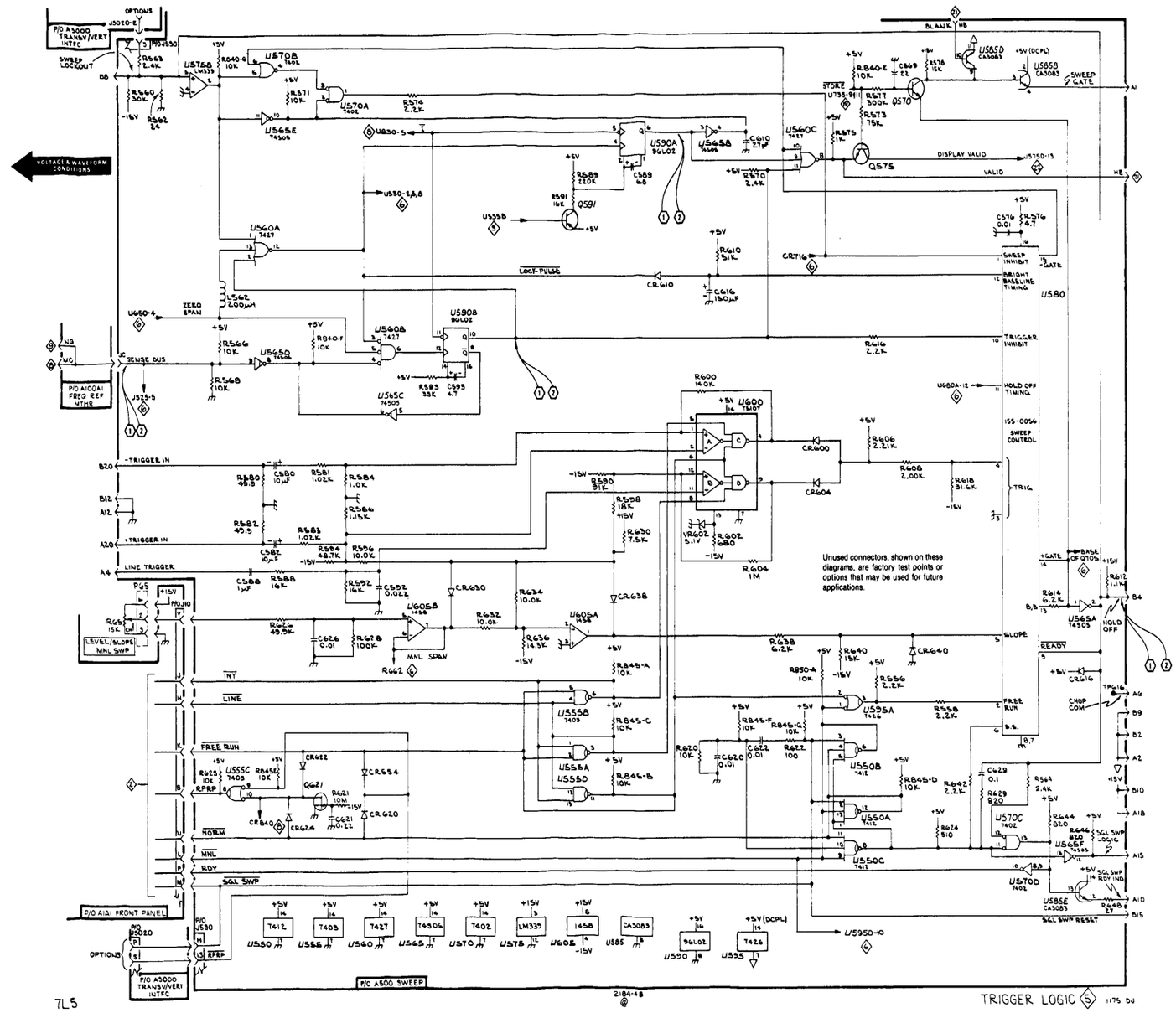

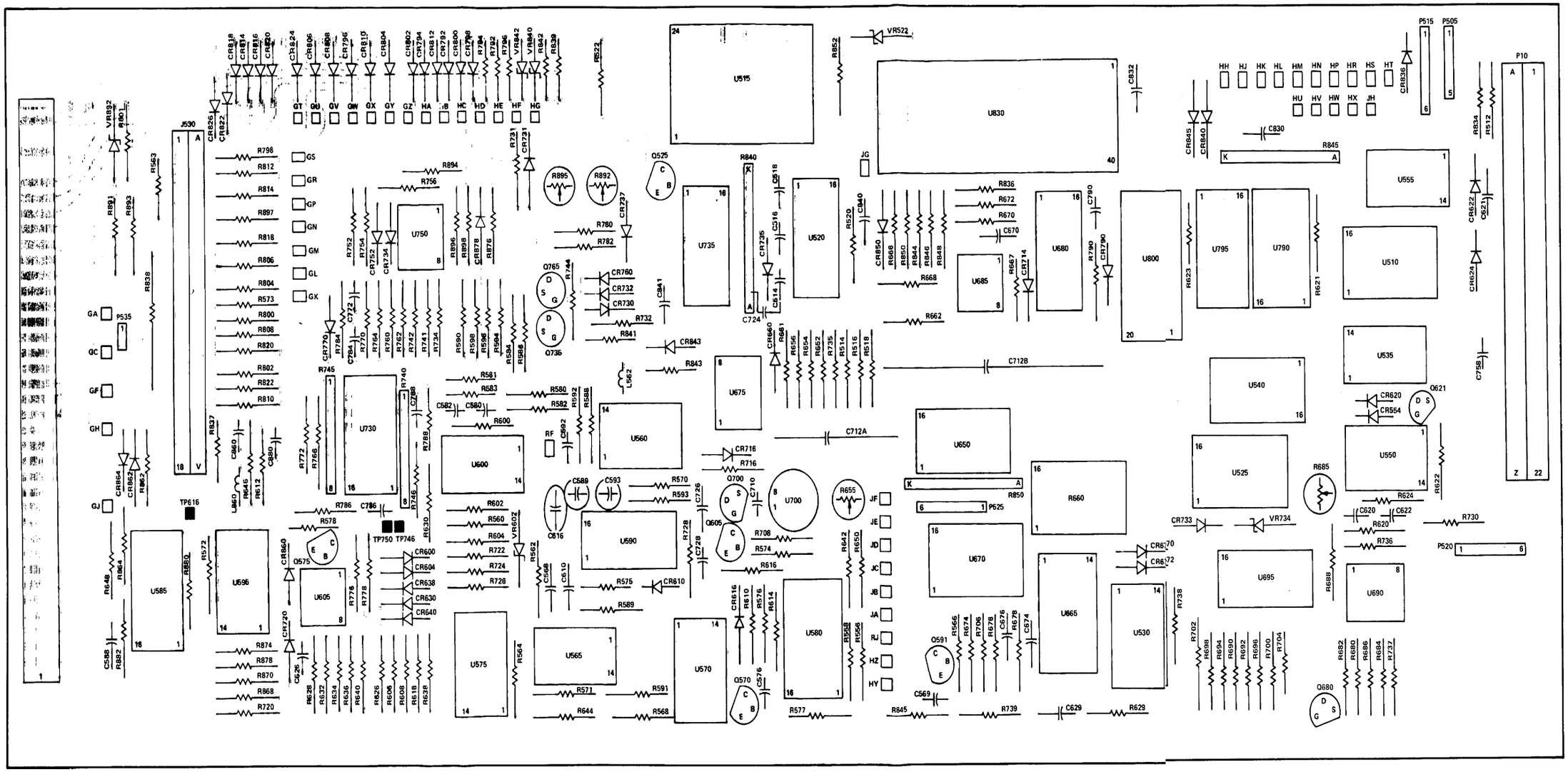

A500 Sweep

A1A1 Front Panel component location shown on back of Diagram (1) A1000A7 2nd Mixer component location shown on back of Diagram (12) A3000 Transverse/Vertical Interface component location shown on back of Diagram (21).

Waveforms shown on this diagram were obtained under the following conditions:

The oscilloscope mainframe contained two dual trace vertical amplifier units (e.g. 7A18) and one time base unit (e.g. 7B70). A C-50 oscilloscope camera was used. Time/Div and Volts/Div settings are indicated on the waveform. The triggering source is internal or indicated with the waveform.

The Digital Averaging circuit board for the 7L5 was positioned to the side as shown in the Calibration section (Fig. 4-20). Pertinent 7L5 control settings are also indicated with the waveform.

1

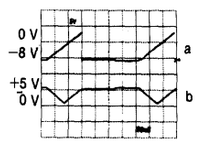

Max Span, triggered on +Gate:
a. Input at U675B, pin 5
b. Input at U575C, pin 7

2

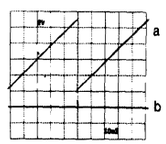

Zero Span, triggered on +Gate:
a. Sweep Output at U700, pin 6
b. Sweep Inhibit at CR716

3

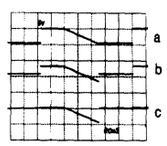

Max Span, triggered on +Gate
Shows output of U665, pin 3
with DOT FREQUENCY of:
a. 00.0
b. 2500.0 kHz
c. 4999.75 kHz

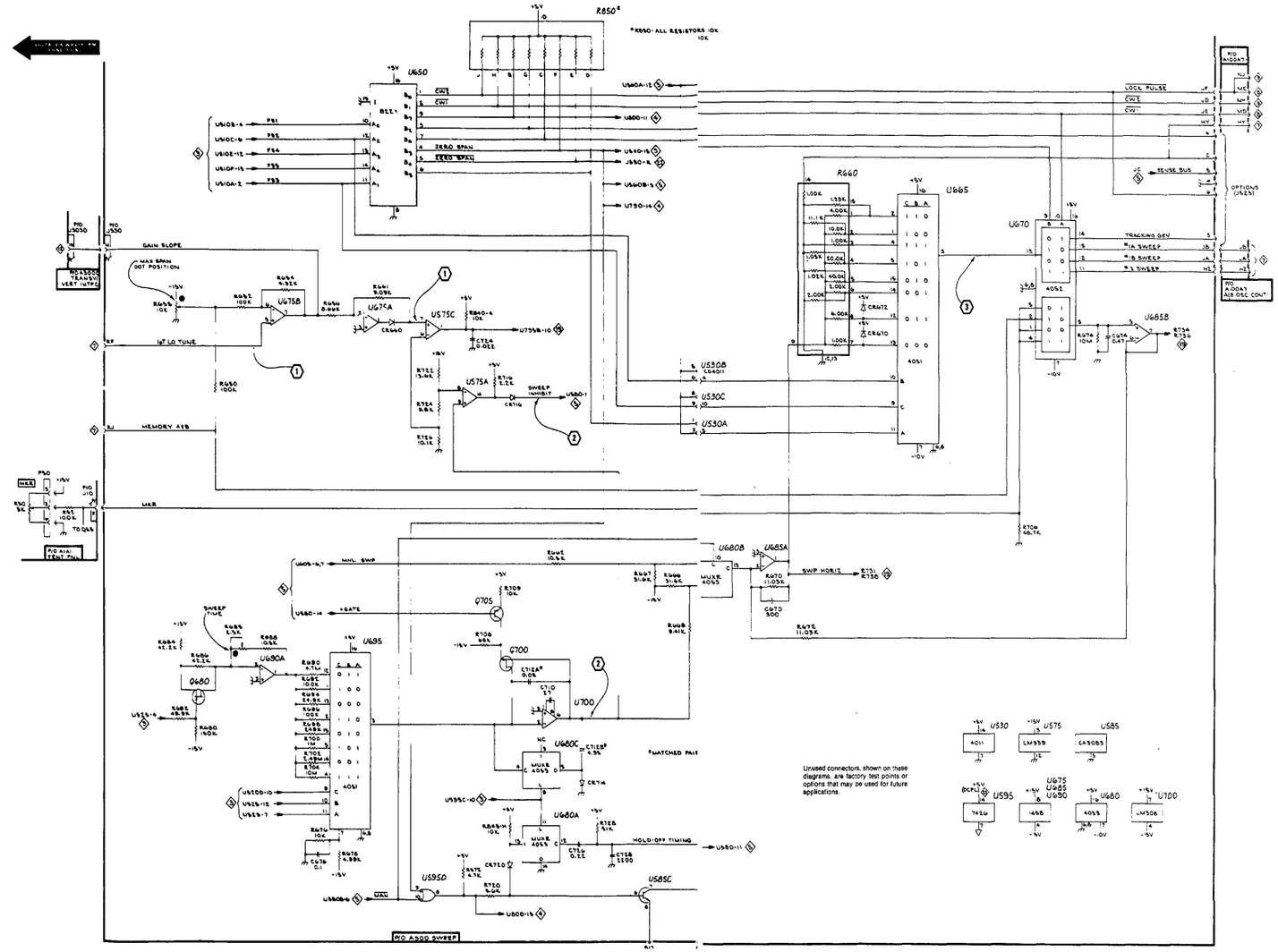

FREQ SPAN ATTEN & SWP GEN (6) 1175 DJ

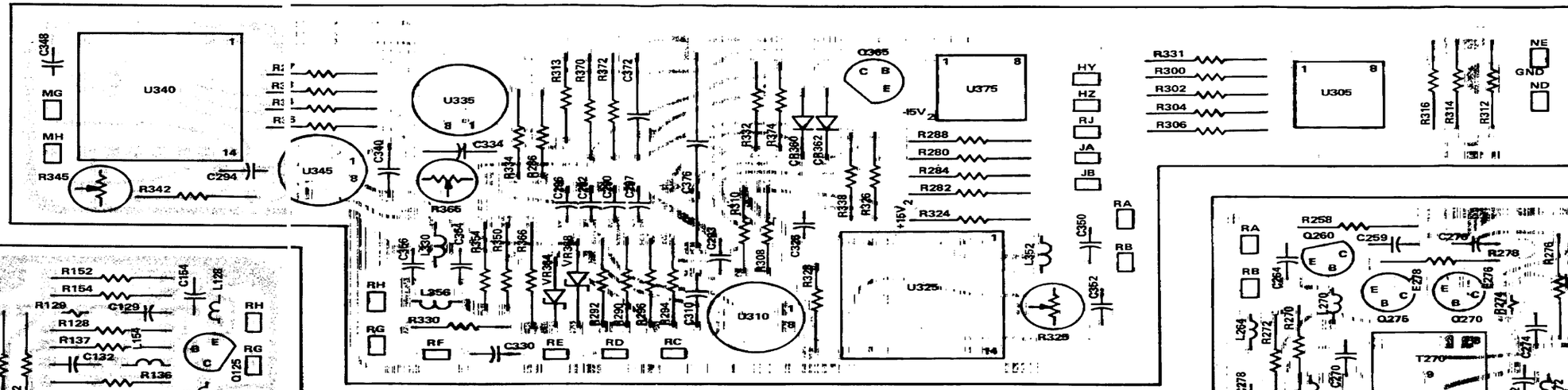

A100A7 A & B Oscillator Control

A100A1 Frequency Reference Mother component location shown on back of Diagram 22

A500 Sweep component location shown on back of Diagram 2

*See Parts List for serial number ranges.

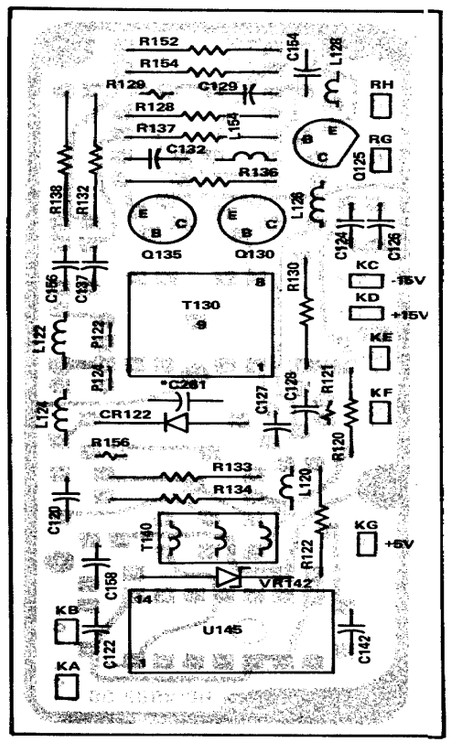

Oscillator

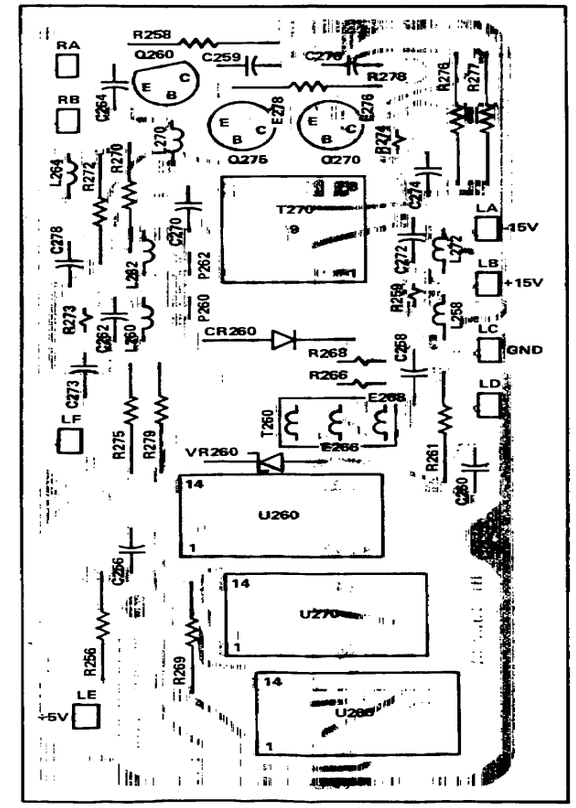

A100A6 B Oscillator

Waveforms shown on this diagram were obtained under the following conditions:

The oscilloscope mainframe contained two dual trace vertical amplifier units (e.g. 7A18) and one time base unit (e.g. 7B70). A C-50 oscilloscope camera was used. Time/Div and Volts/Div settings are indicated on the waveform. The triggering source is internal or indicated with the waveform.

The Digital Averaging circuit board for the 7L5 was positioned to the side as shown in the Calibration section (Fig. 4-20). Pertinent 7L5 control settings are also indicated with the waveform.

1

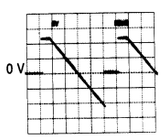

SPAN/DIV 2 kHz

2

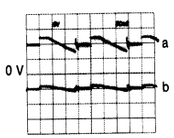

a. Output at U325, pin 9 DOT FREQ 1000.00
b. Output with DOT FREQ 99.75

3 a

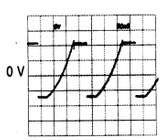

MAX SPAN
DOT FREQ 4999.75 kHz

3 b

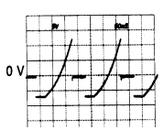

MAX SPAN
DOT FREQ 2500.00 kHz

4

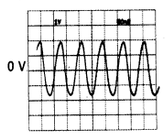

SPAN/DIV 10 kHz

5

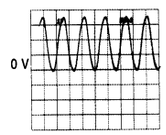

SPAN/DIV 10 kHz

6

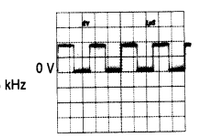

DOT FREQ 100.00 kHz

7

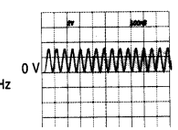

DOT FREQ 100.00 kHz

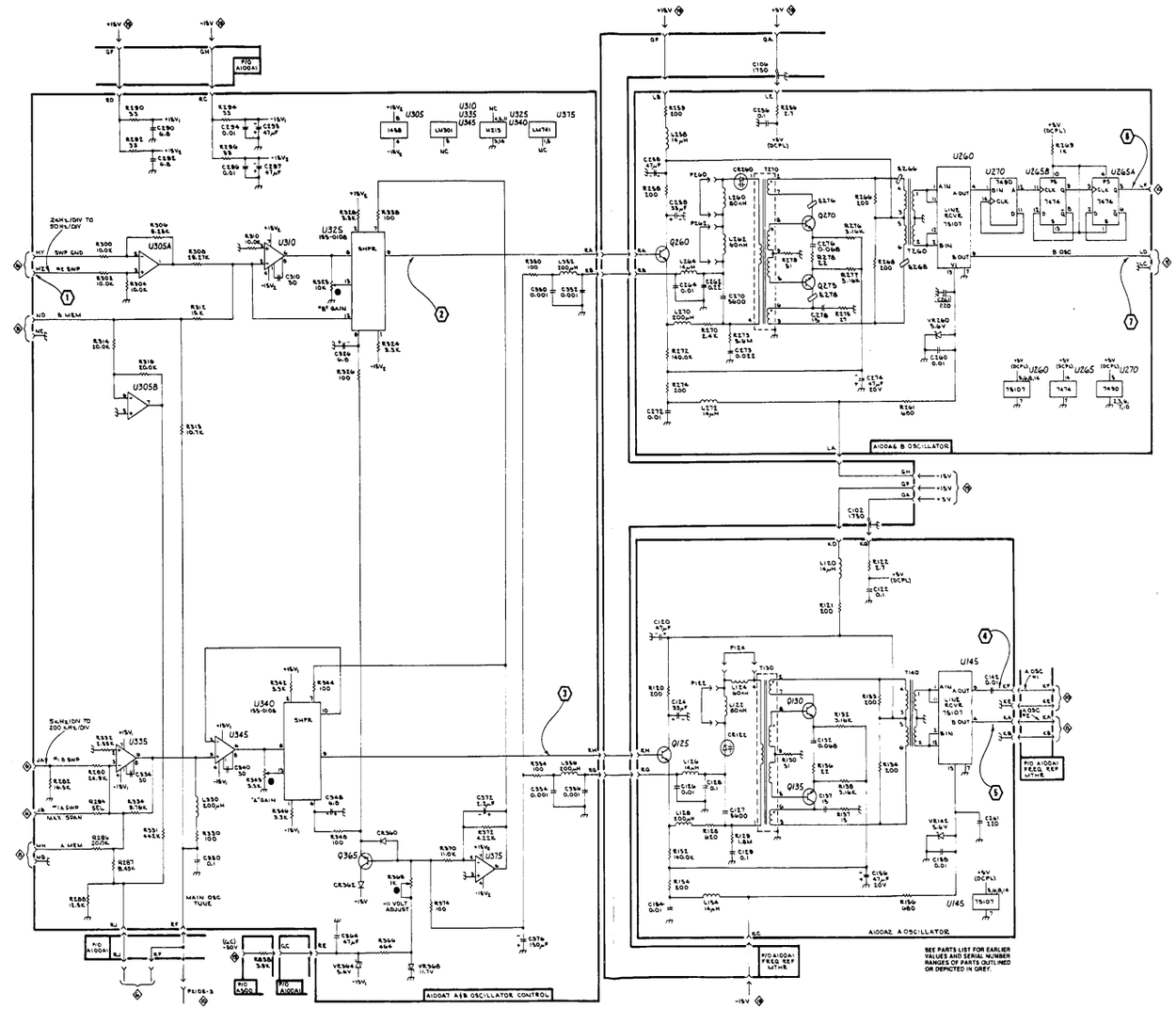

A & B OSCILLATORS & CONROL 7
FO-16

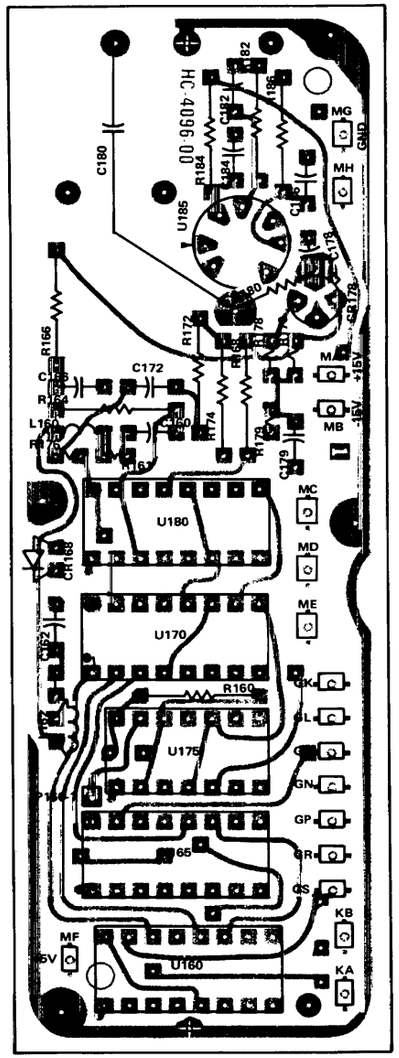

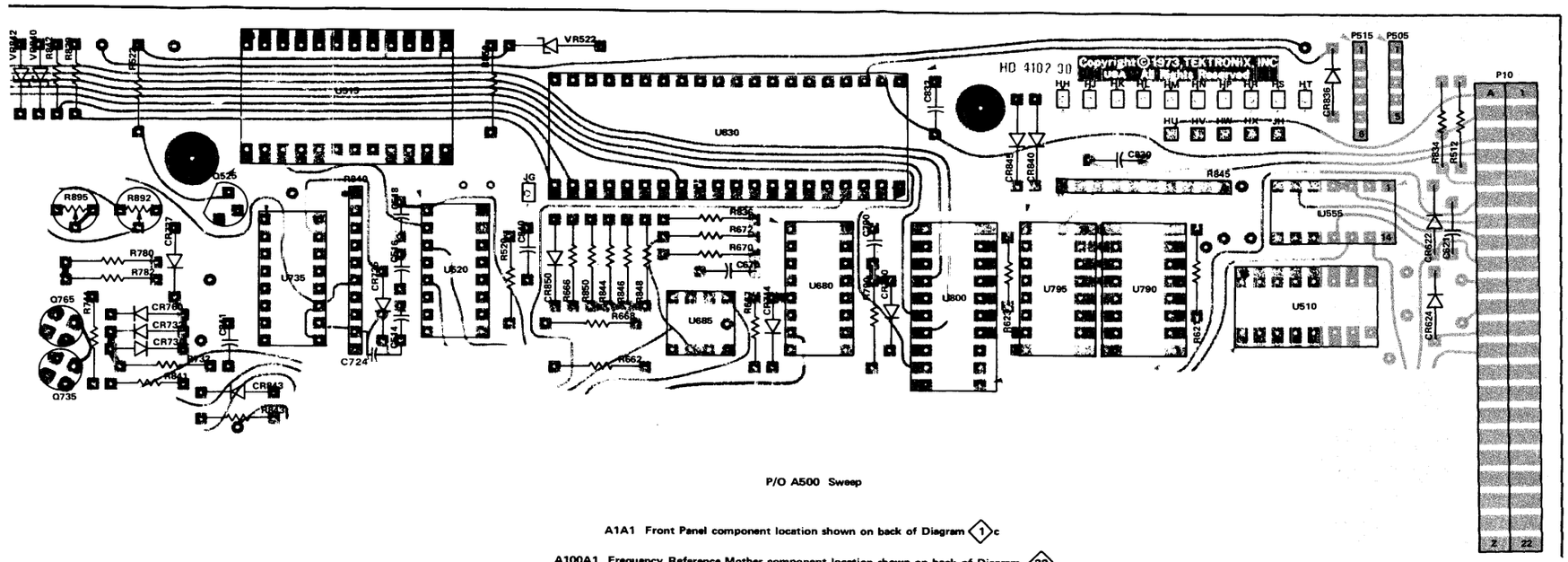

P/O A500 Sweep

A1A1 Front Panel component location shown on back of Diagram 1c

A100A1 Frequency Reference Mother component location shown on back of Diagram 22

A3000 Transverse/Vertical Interface component location shown on back of Diagram 22

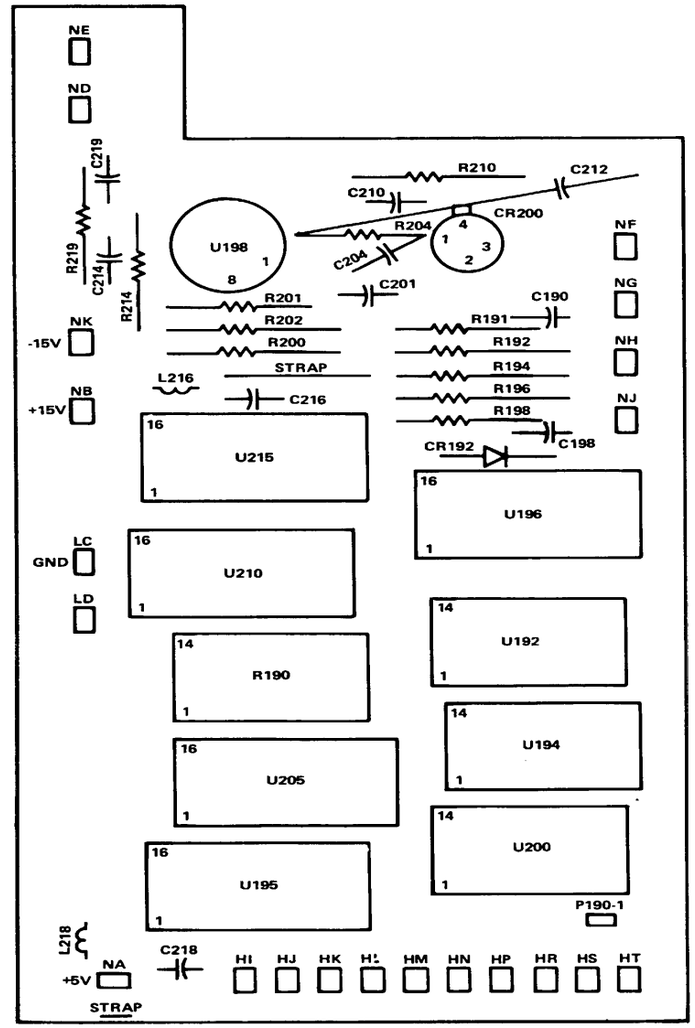

A100A4 Tune Reference (B ÷ N)

A100A1 Frequency Reference Mother component location shown on back of Diagram 22

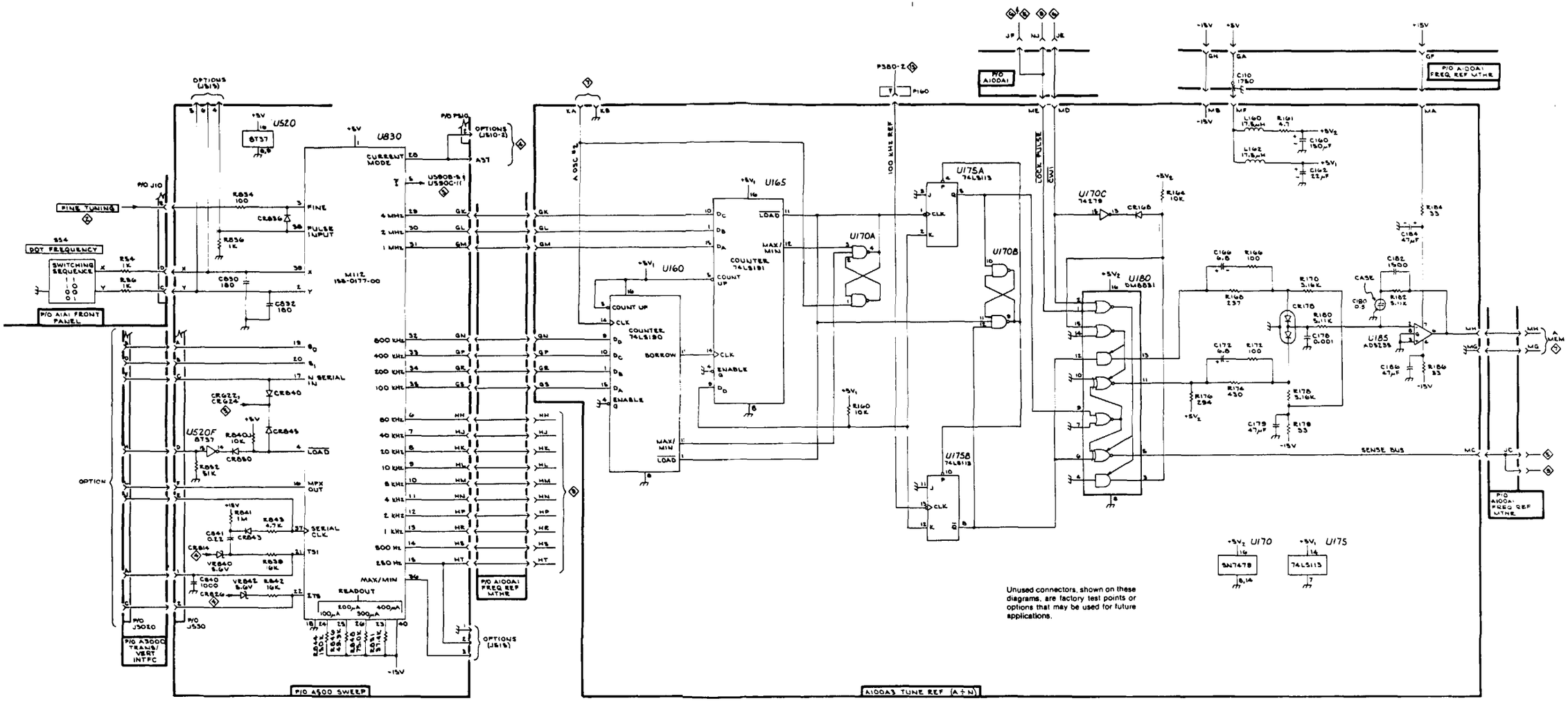

Unused connectors, shown on these diagrams, are factory test points or options that may be used for future applications.

TUNE REFERENCE (A ÷ N) 8

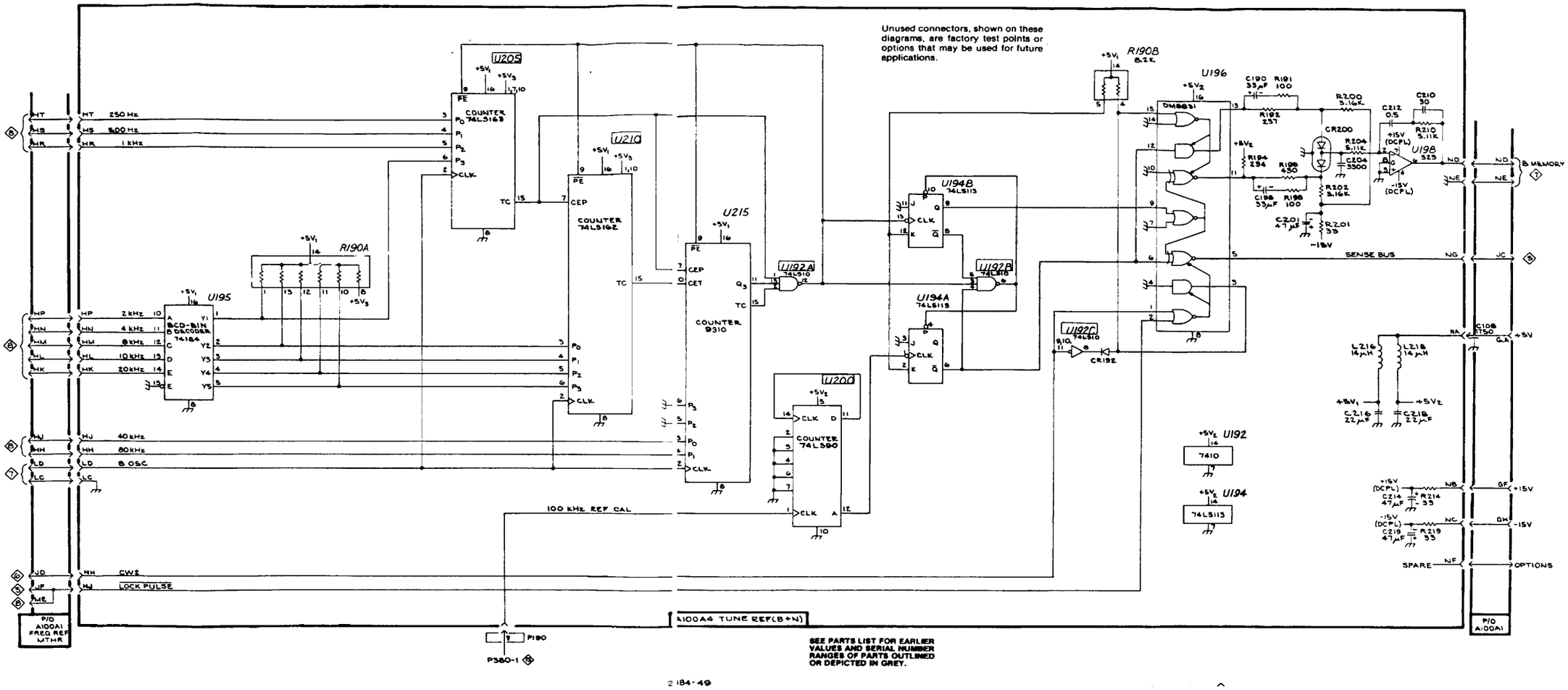

SEE PARTS LIST FOR EARLIER VALUES AND SERIAL NUMBER RANGES OF PARTS OUTLINED OR DEPICTED IN GREY.

2184-49

TUNE REFERENCE (B÷ N) 9

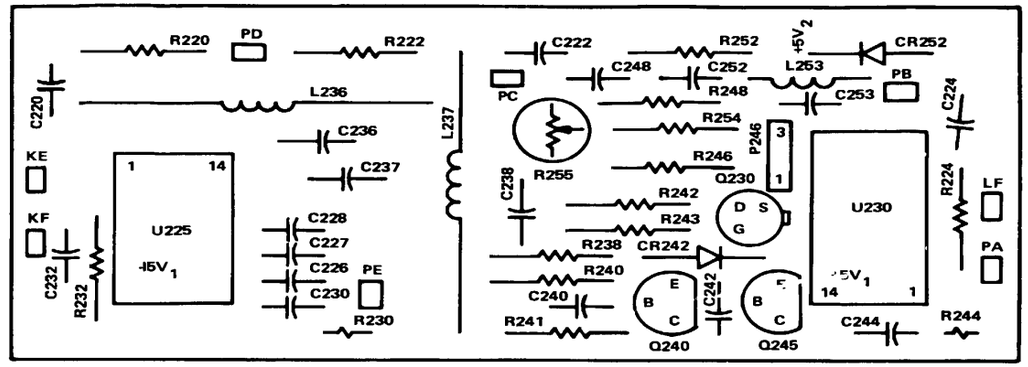

A100A5 1st LO Lock

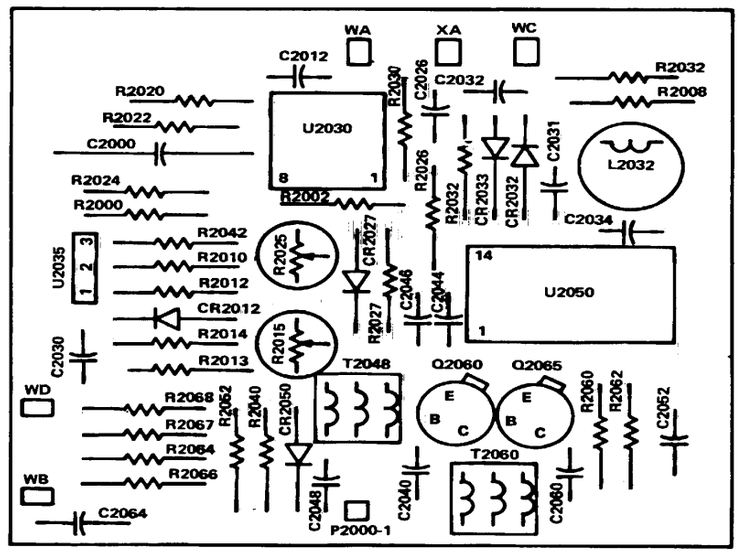

A2000A1A1 1ST LO Board
A100A1 Frequency Reference Mother component location shown on back of Diagram 22

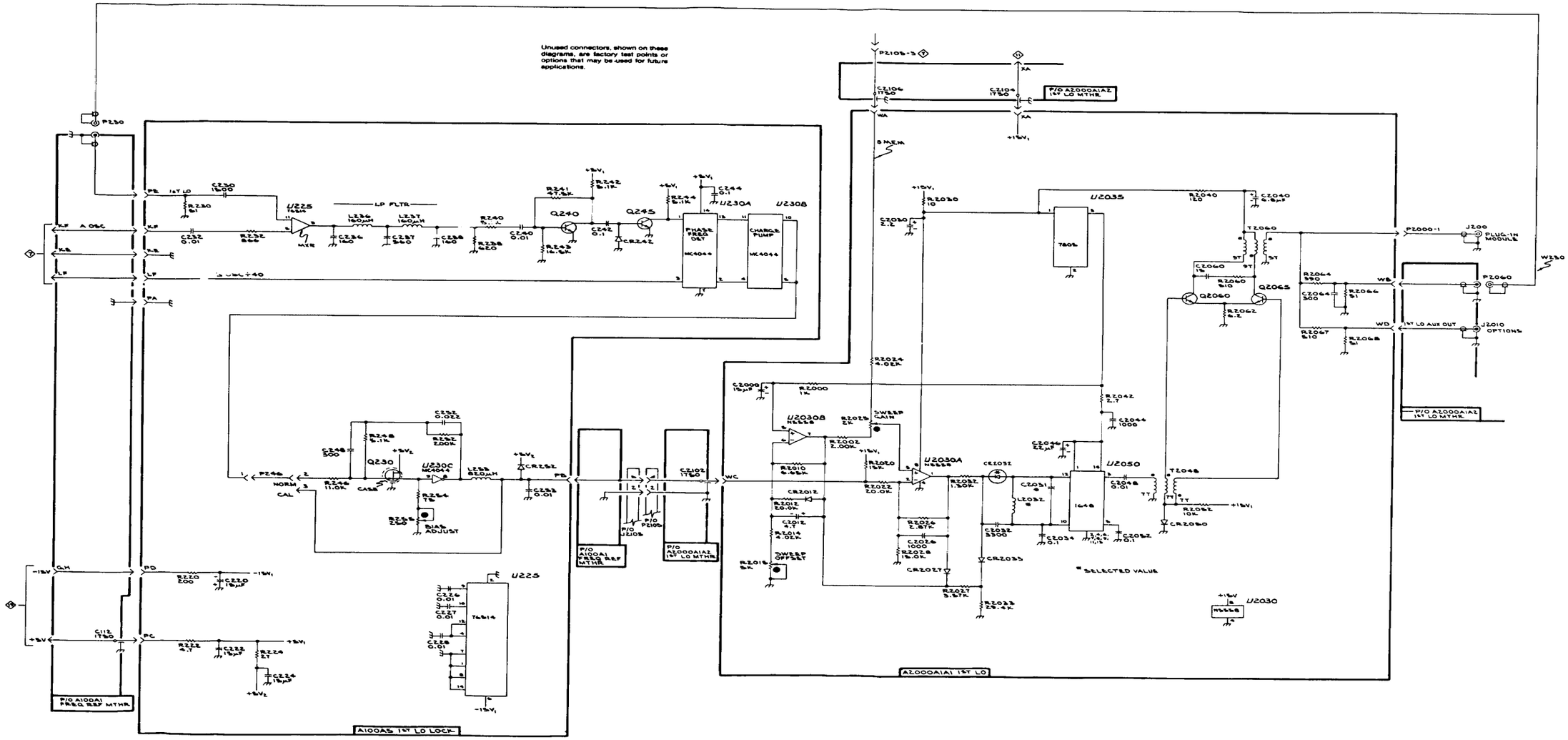

1st LO/1ST LO LOCK (10)

FO-22

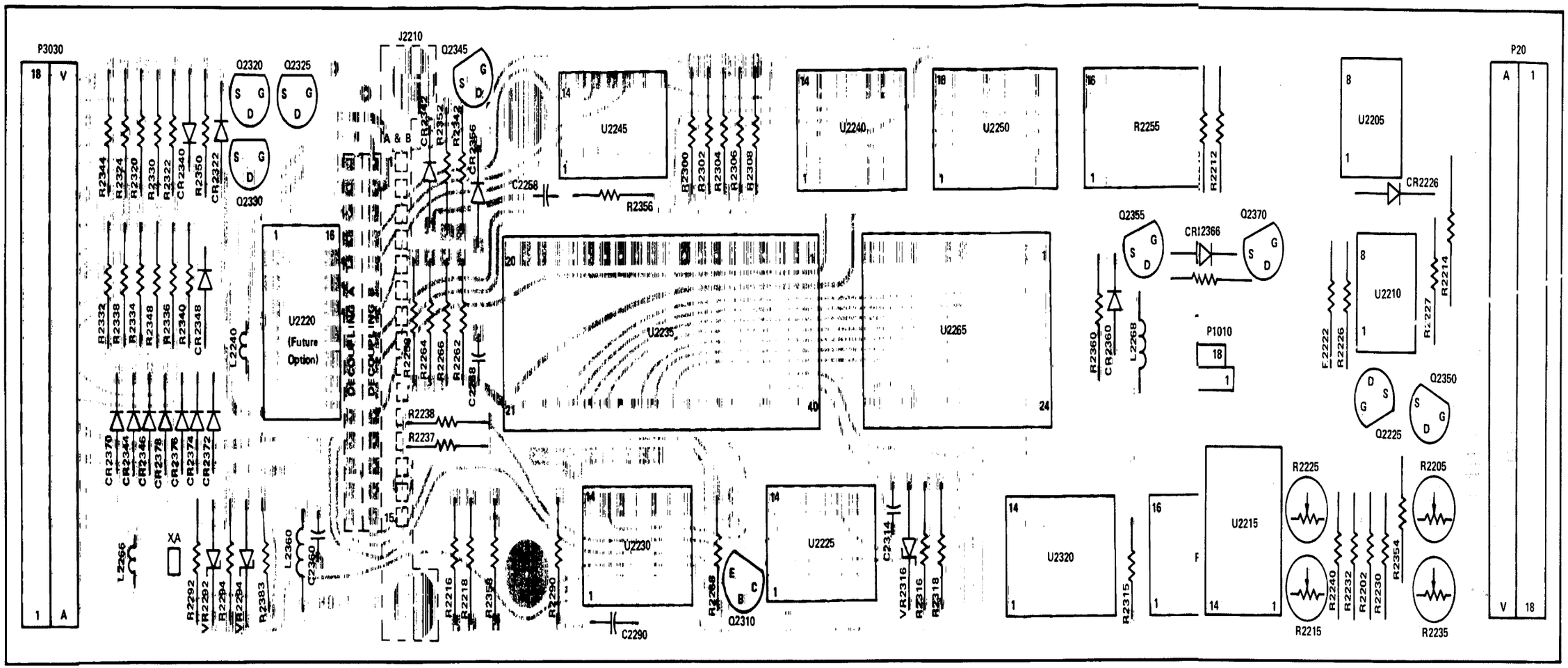

A1A1 Front Panel component location shown on back of D8iagram (1)

A1000A1 IF Mother component location shown on back of Diagram (22)

A3000 Transverse/Vertical Interface component location shown on back of Diagram (22)

7L5

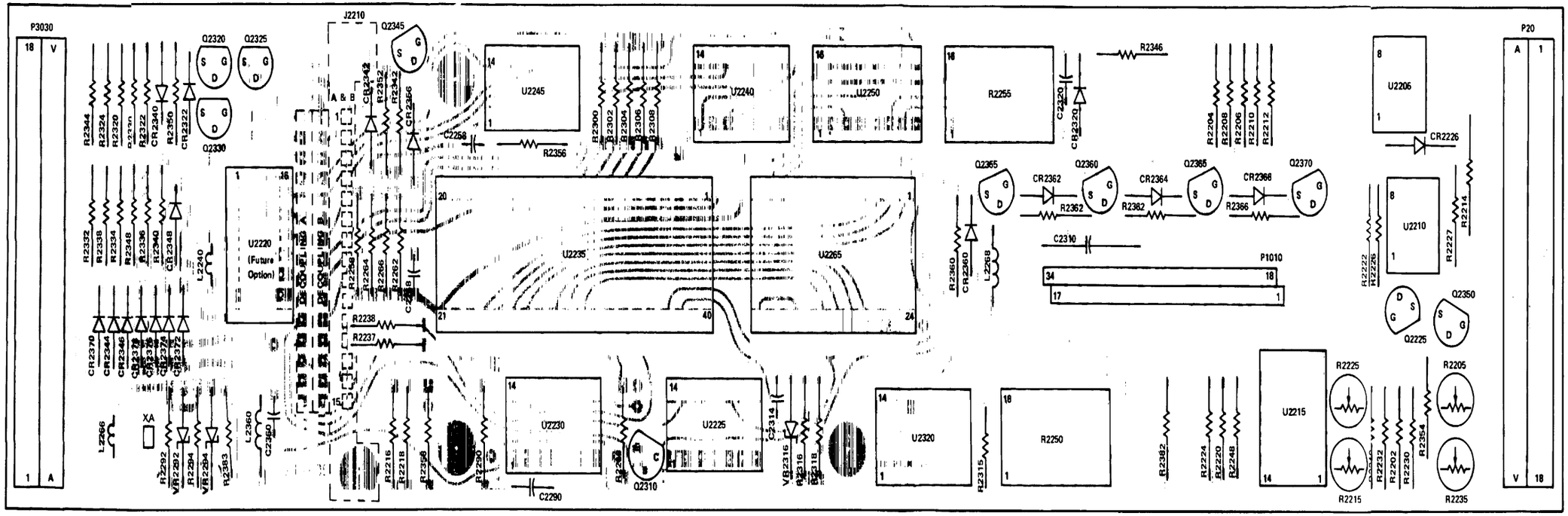

A2000A2 Vertical Control

A1A1 Front Panel component location shown on back of Diagram 1 c

A100A1 Frequency Reference Mother component location shown on back of Diagram 22

A500 Sweep component location shown on back of Diagram 2

A1000A1 IF Mother component location shown on back of Diagram 22

A1000A5 250 kHz Amplifier component location shown on back of Diagram 13

A3000 Transverse/Vertical Interface component location shown on back of Diagram 21

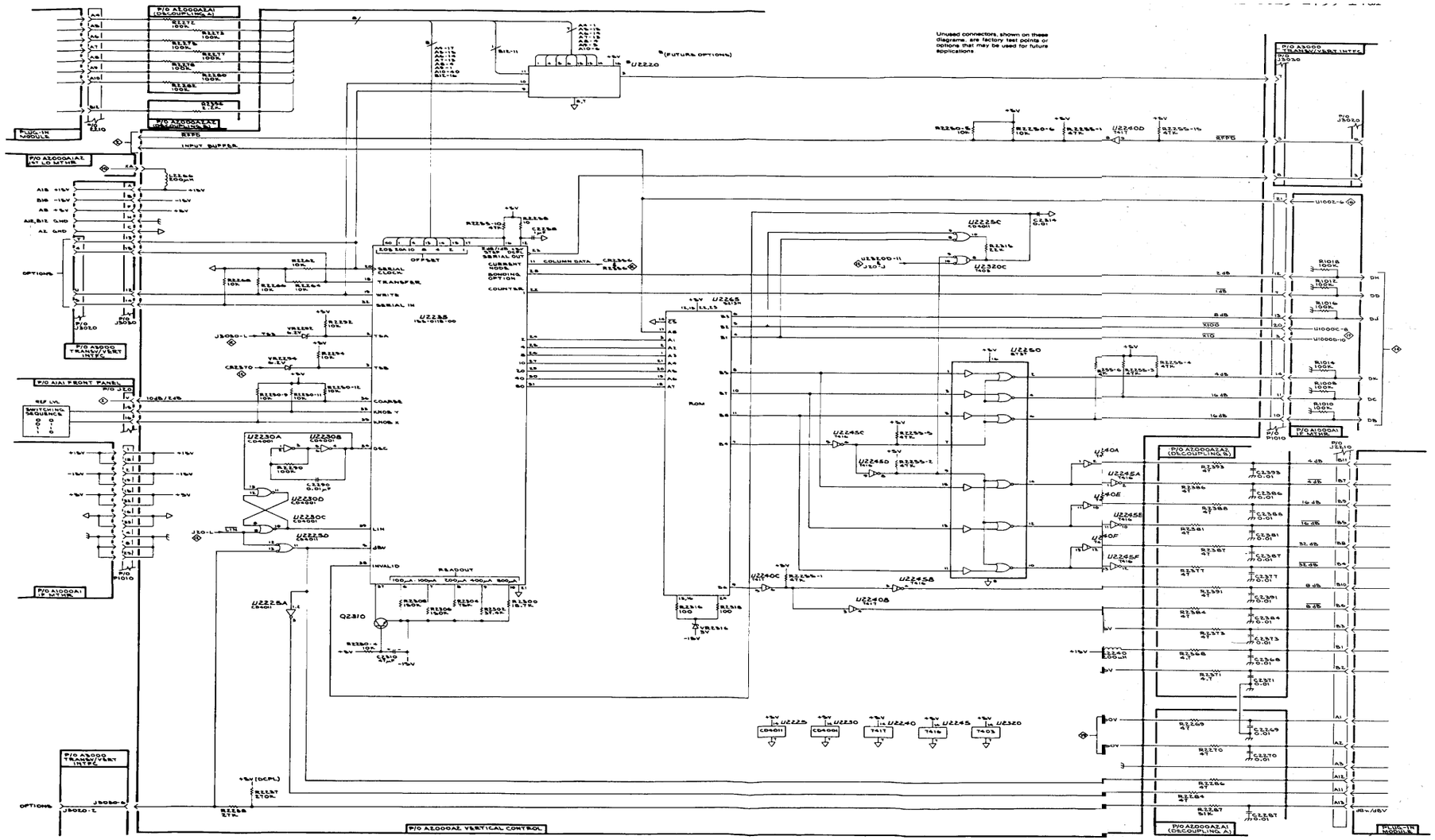
Unused connectors, shown on these diagrams, are factory test points or options that may be used for future applications
P/O A2000A2A1 (DISCOUPLING A)
P/O A2000A2A2 (DISCOUPLING B)
PLUG-IN MODULE
P/O A2000A2A2 LO MTHR.
INPUT BUFFER
P/O A2000 TRANSV/VERT INTFC
P/O A1A1 FRONT PANEL
SWITCHING SEQUENCE
P/O A1000A1 IF MTHR.
P/O A2000A2A2 (DISCOUPLING B)
P/O A2000A2A1 (DISCOUPLING A)
P/O A2000A2 VERTICAL CONTROL
(FUTURE OPTIONS)
OFFSET
SERIAL CLOCK
TRANSFER
WRITE
SERIAL IN
COLUMN DATA
COUNTER
ROM
READOUT
INVALID
COARSE
KNOB Y
KNOB X
OPTIONS

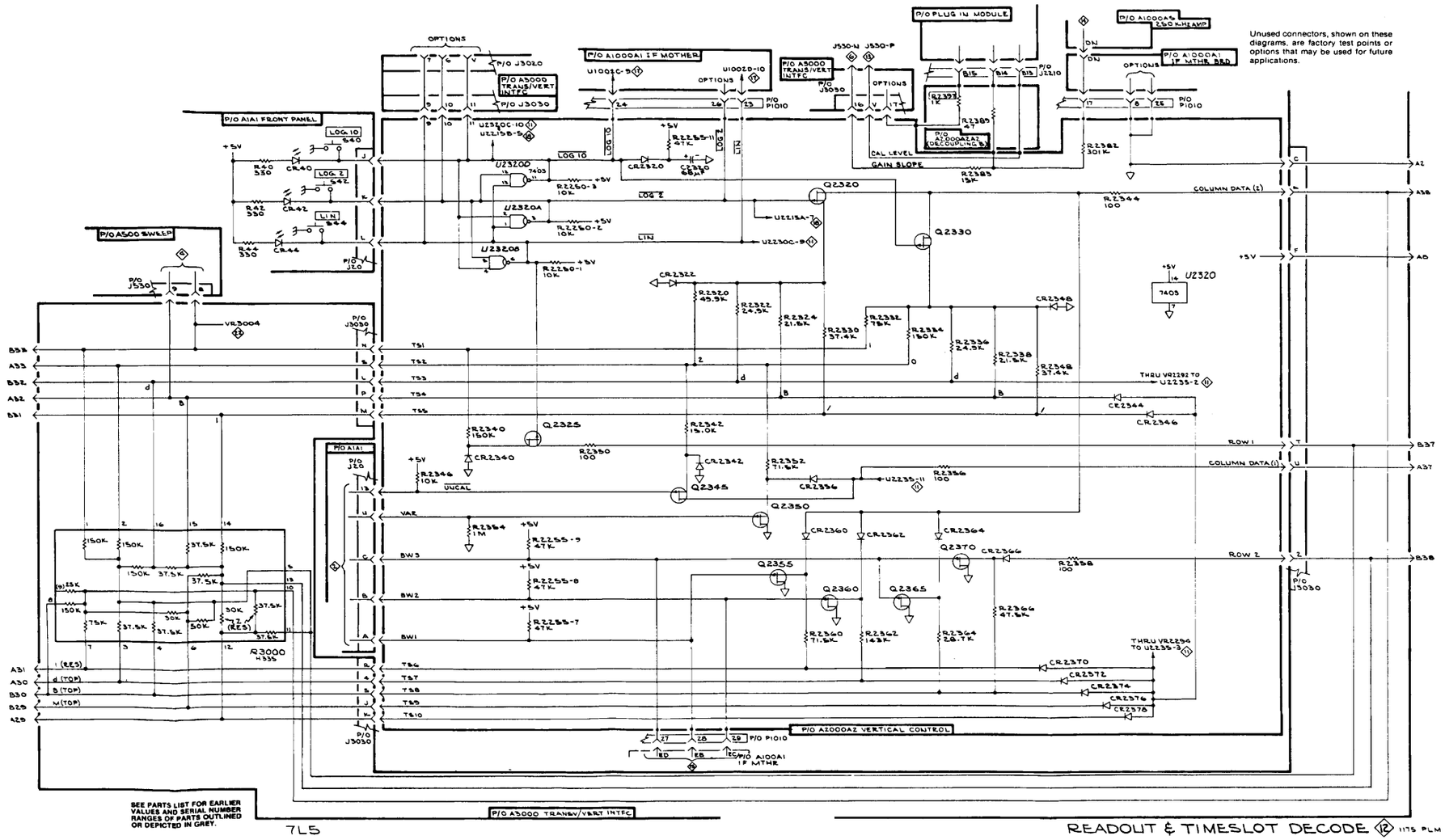
Unused connectors, shown on these diagrams, are factory test points or options that may be used for future applications.
P/O A1A1 FRONT PANEL
P/O A500 SWEEP
P/O A5000 TRANS/VERT INTFC
P/O A1000A1 IF MOTHER
P/O PLUG IN MODULE
P/O A1000A5 250 KHZ AMP
P/O A1000A1 IF MTHR BRD
P/O A2000A2A1 (DEC COUPLING BD)
P/O A2000A2 VERTICAL CONTROL
P/O A5000 TRANS/VERT INTFC
SEE PARTS LIST FOR EARLIER VALUES AND SERIAL NUMBER RANGES OF PARTS OUTLINED OR DEPICTED IN GREY.
7L5
READOUT & TIMESLOT DECODE 12 1175 PLM

7L5

7L5

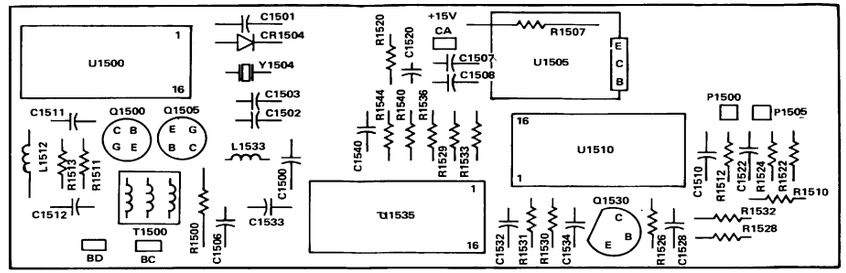

A1000A6 2nd LO

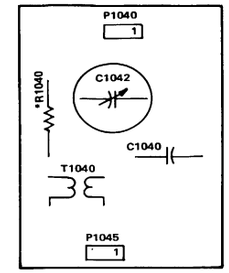

A1000A2 10.7 MHz IF Input Filter

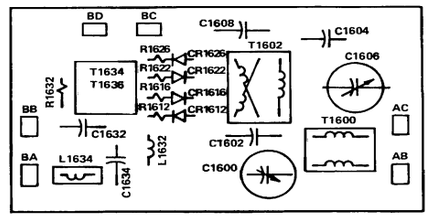

A1000A7 2nd Mixer

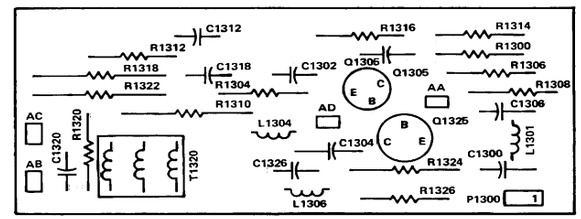

A1000A4 10.7 MHz Amplifier

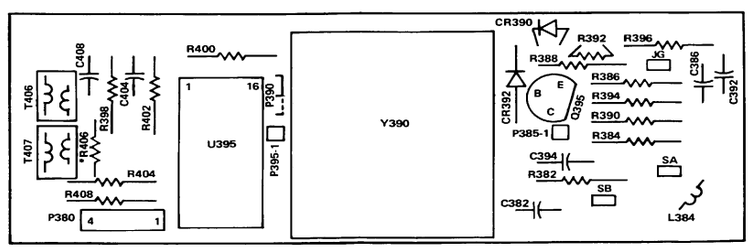

A100A1 Frequency Reference Mother component location shown on back of Diagram 22

A500 Sweep component location shown on back of Diagram 2

A1000A1 IF Mother component location shown on back of Diagram 22

@

A100A8 Reference Oscillator & Calibrator

***See parts List for serial number range**

S.

7L5

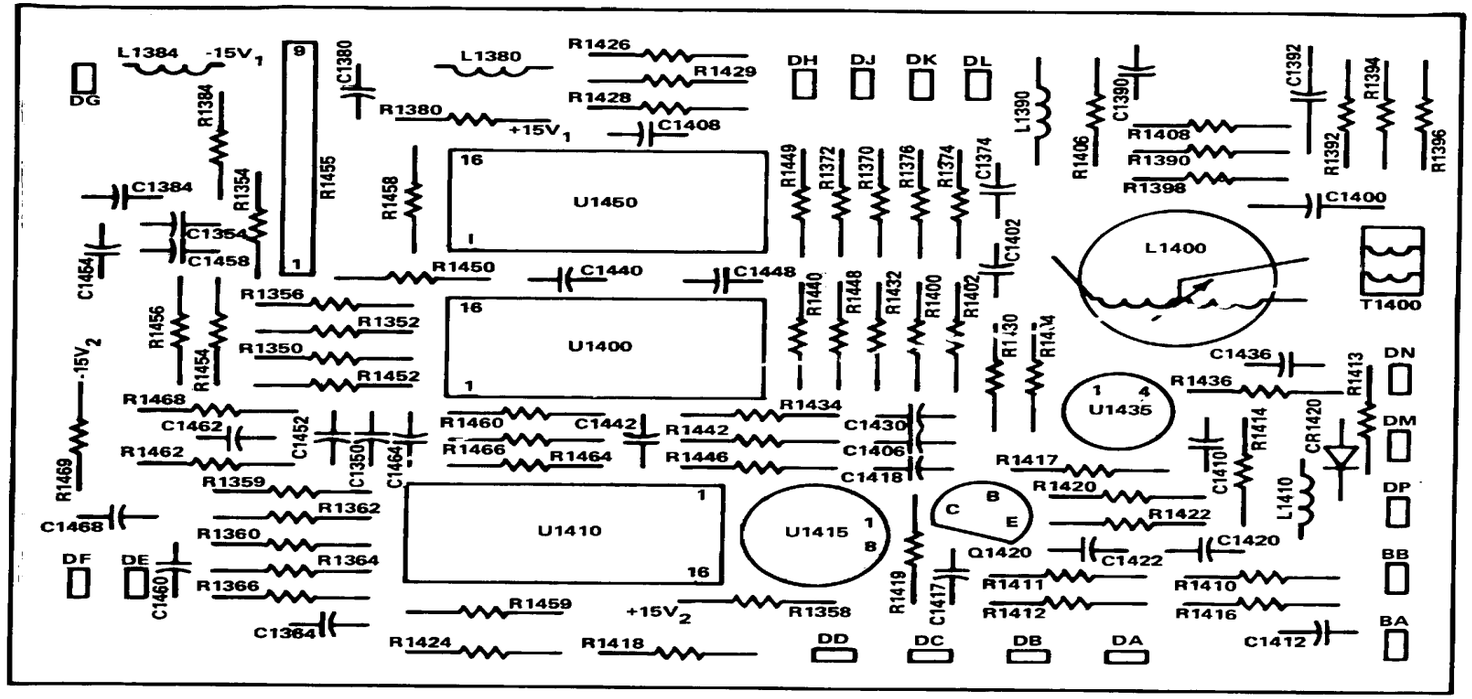

A1000A5 250 kHz Amplifier

A1A1 Front Panel component location shown on back of Diagram 1c

A100A1 Frequency Reference Mother component location shown on back of Diagram 22

A2000A2 Vertical Control component location shown on back of Diagram 11

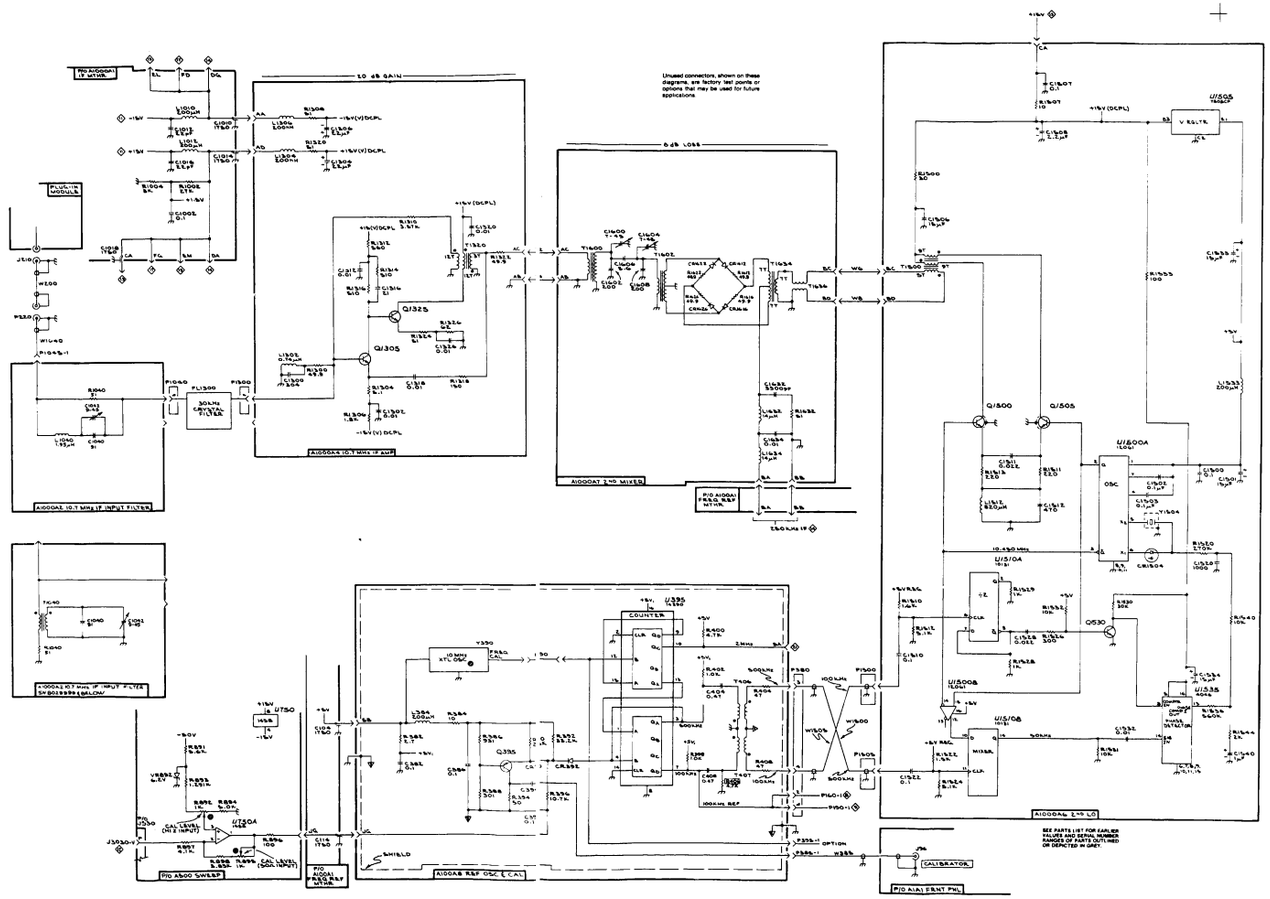

7L5

REF CAL/10.7 MHz IF/2ND MIXER/2ND LO LOCK 13 1175

2184-53

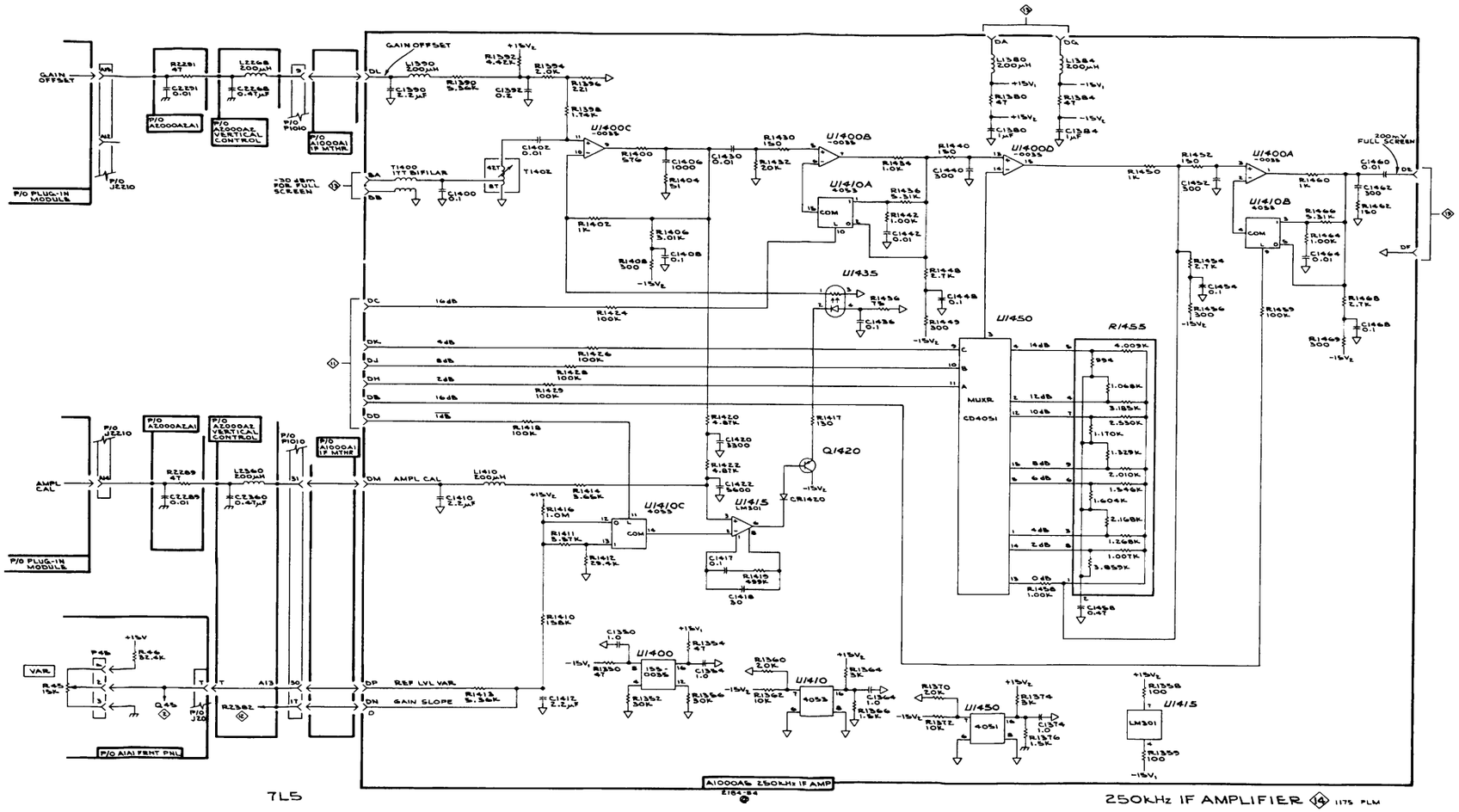
GAIN OFFSET
P/O PLUG-IN MODULE
P/O A1000A2A1
P/O A1000A2 VERTICAL CONTROL
P/O A1000A1 IF MTHR
AMPL CAL
VAR
U1400C
U1400B
U1400D
U1400A
U1410A
U1410B
U1410C
U1415
U1435
U1450
U1400
U1410
Q420
R1455
MUXR
CD4051
LM301
REF LVL VAR
GAIN SLOPE
A1000A6 250KHz IF AMP
250KHz IF AMPLIFIER
7L5

2184-54

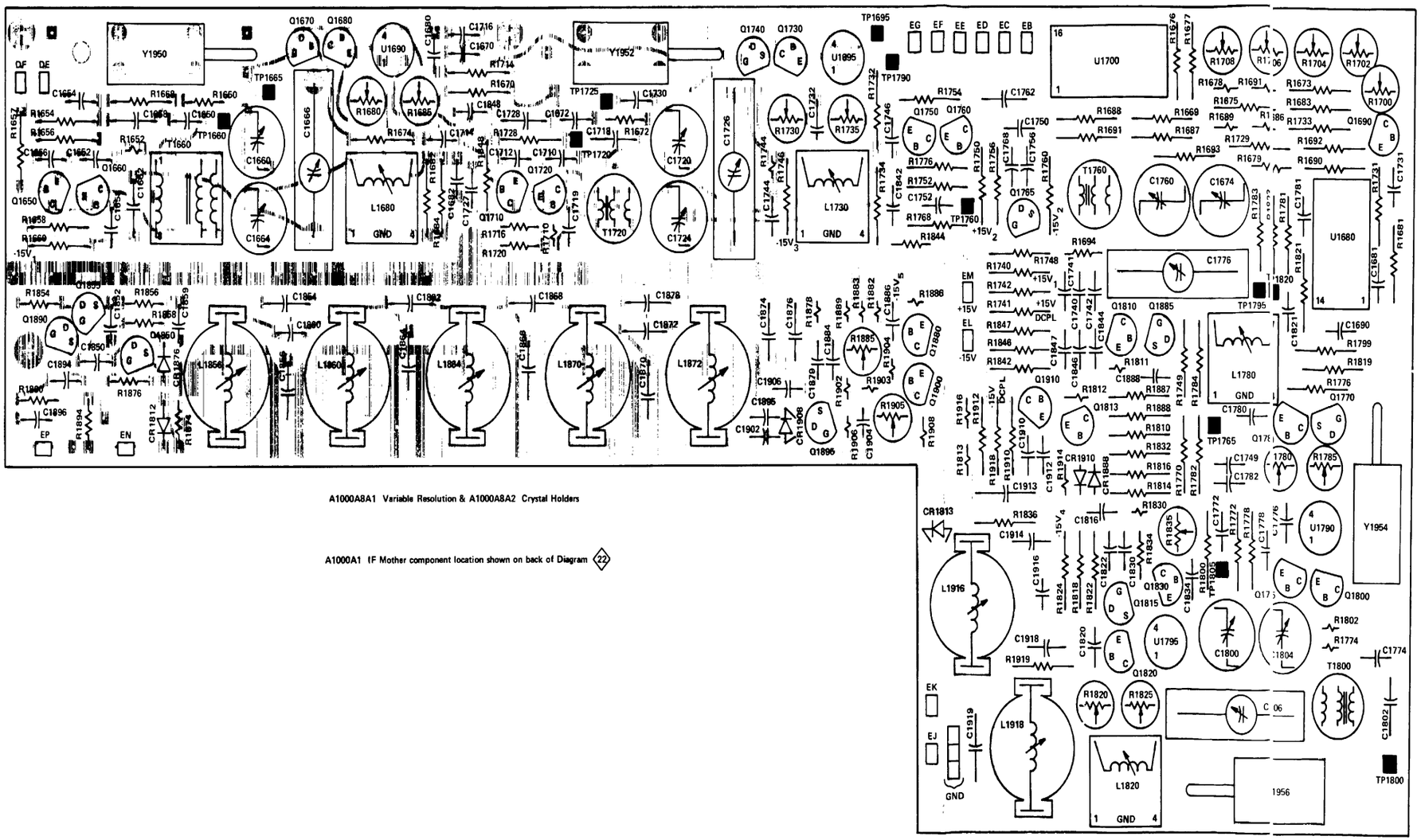

A1000A8A1 Variable Resolution & A1000A8A2 Crystal Holders

A1000A1 IF Mother component location shown on back of Diagram ㉒

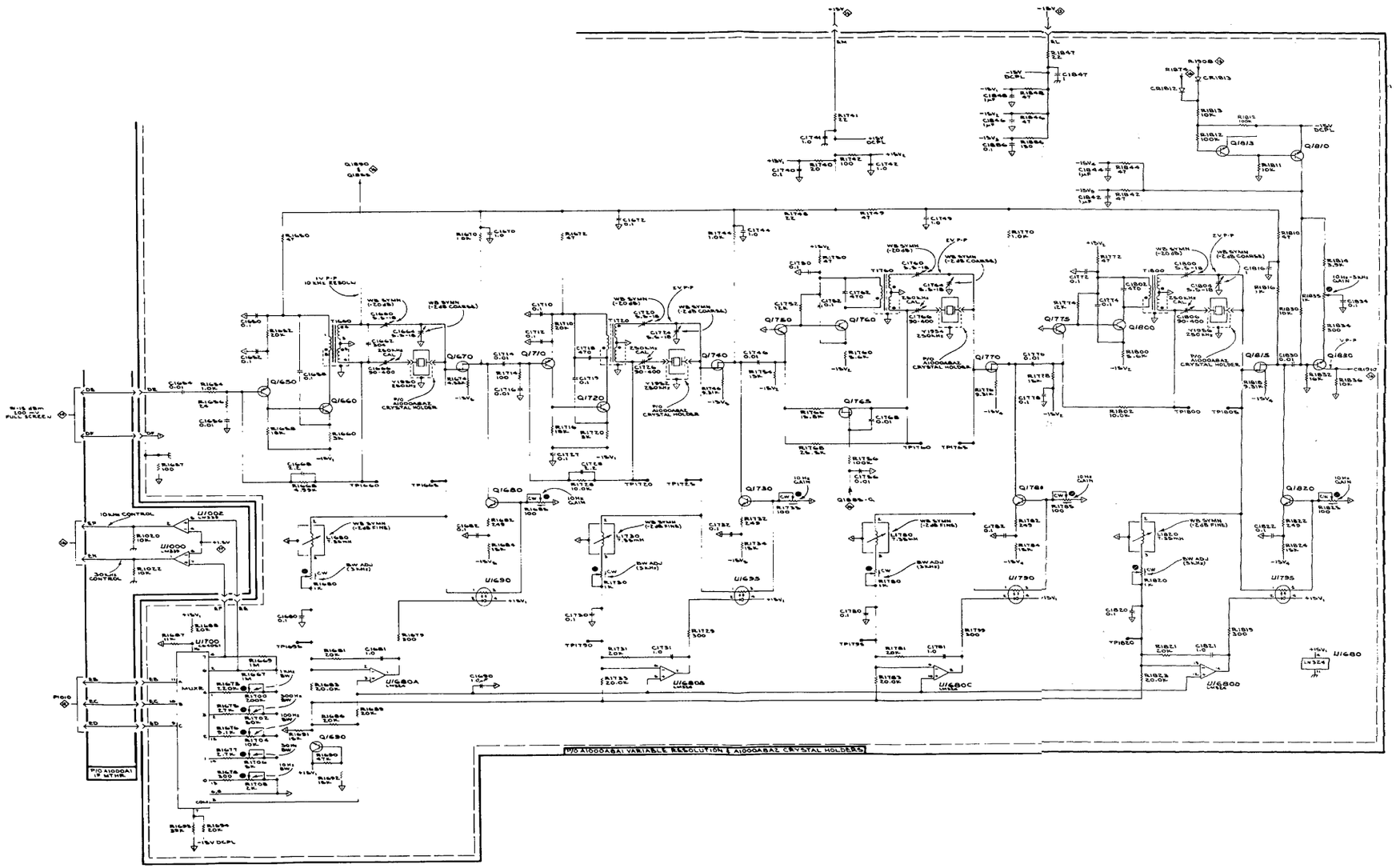

7L5

@

VARIABLE RESOLUTION AML 15 1176 PLM

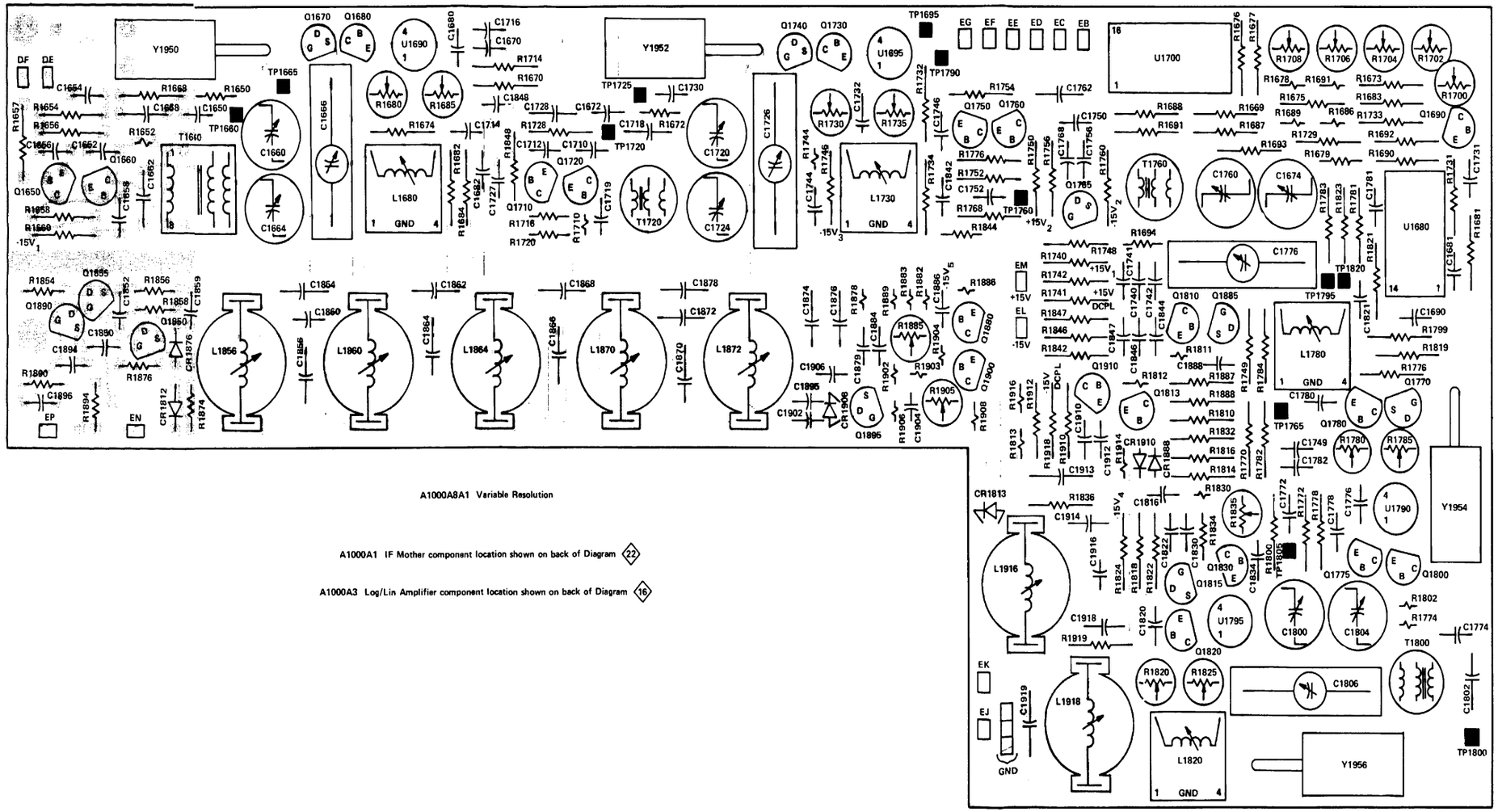

A1000A8A1 Variable Resolution

A1000A1 IF Mother component location shown on back of Diagram 22

A1000A3 Log/Lin Amplifier component location shown on back of Diagram 16

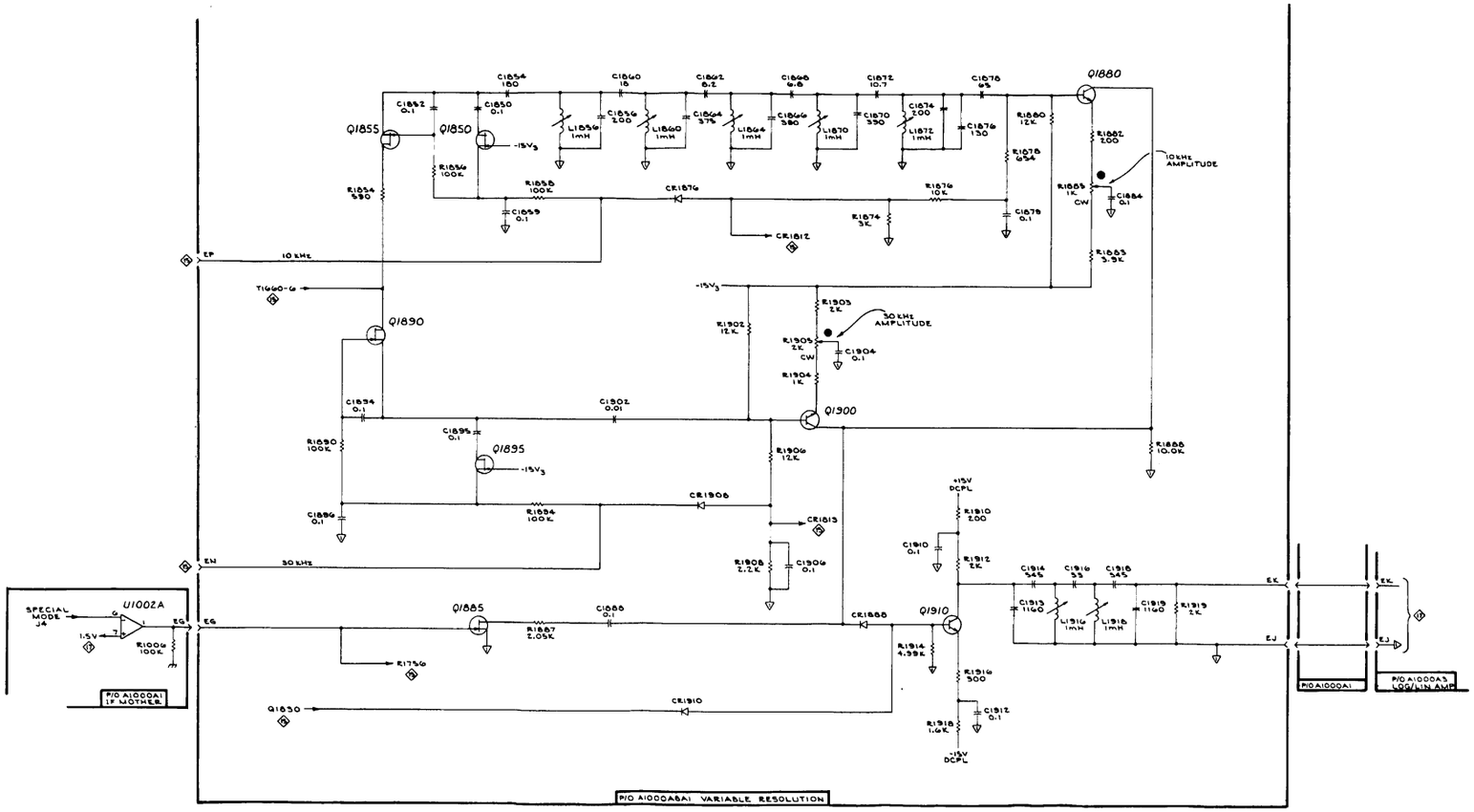

7L5

10kHz & 30kHz FILTERS/ POST VR AMPL **16** **1175 DJ**

2184-56

7L5

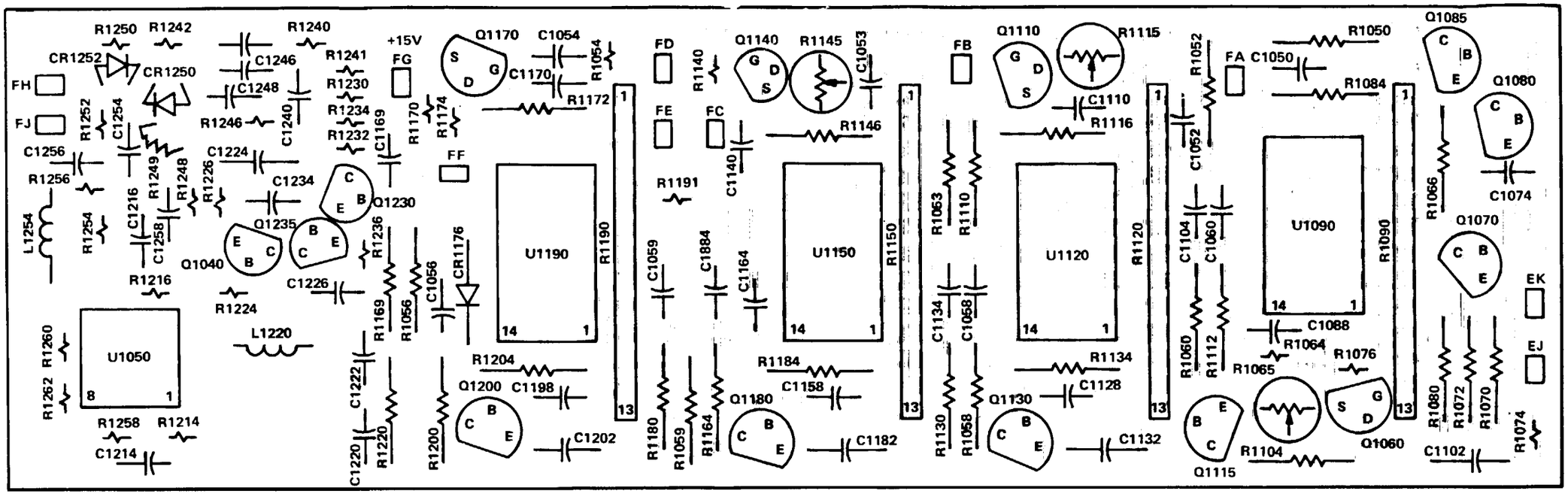

A1000A3 Log/Lin Amplifier

A1000A1 IF Mother component location shown on back of Diagram 22

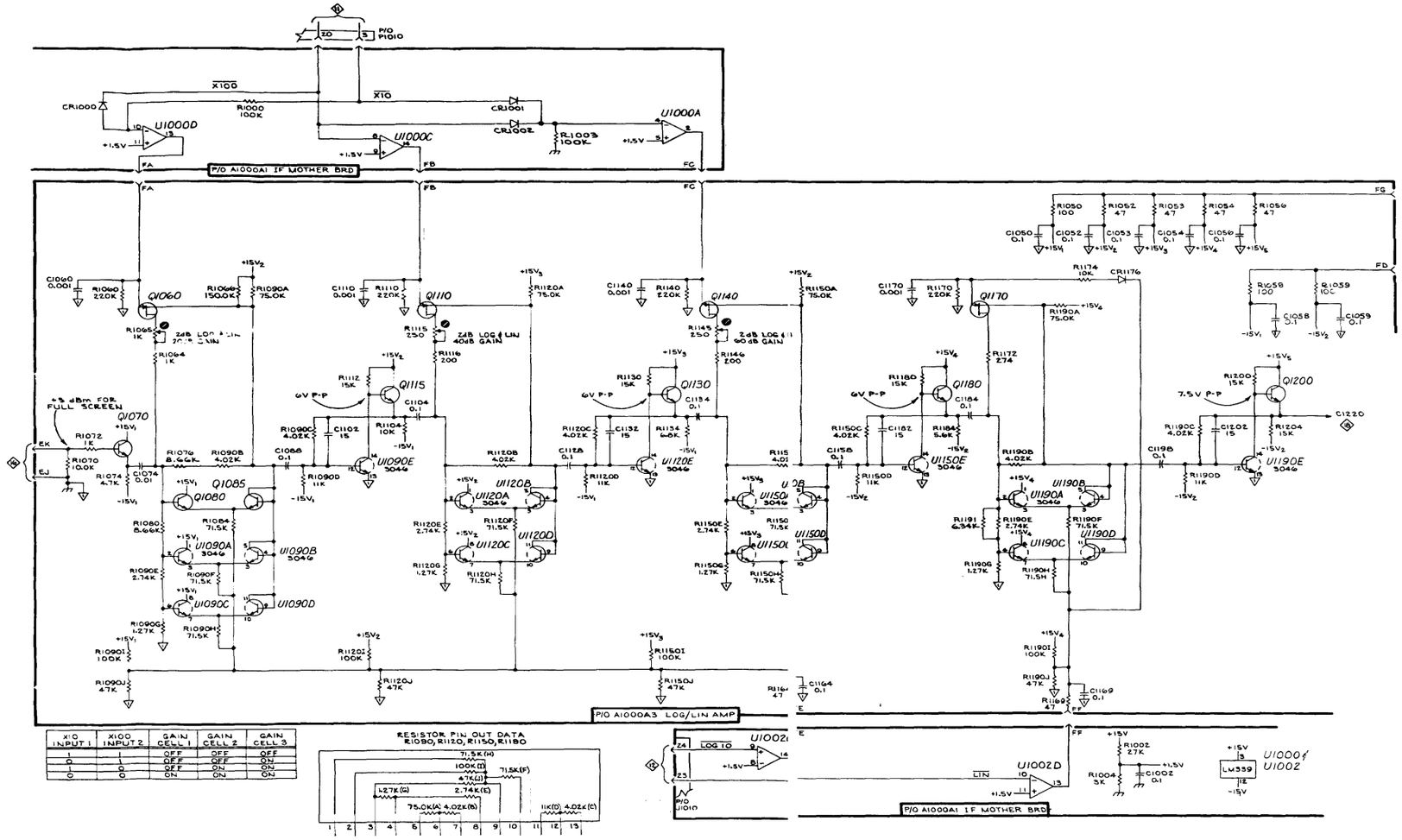

X10 INPUT 1	X100 INPUT 2	GAIN CELL 1	GAIN CELL 2	GAIN CELL 3
1	1	OFF	OFF	OFF
0	1	OFF	OFF	ON
1	0	OFF	ON	ON
0	0	ON	ON	ON

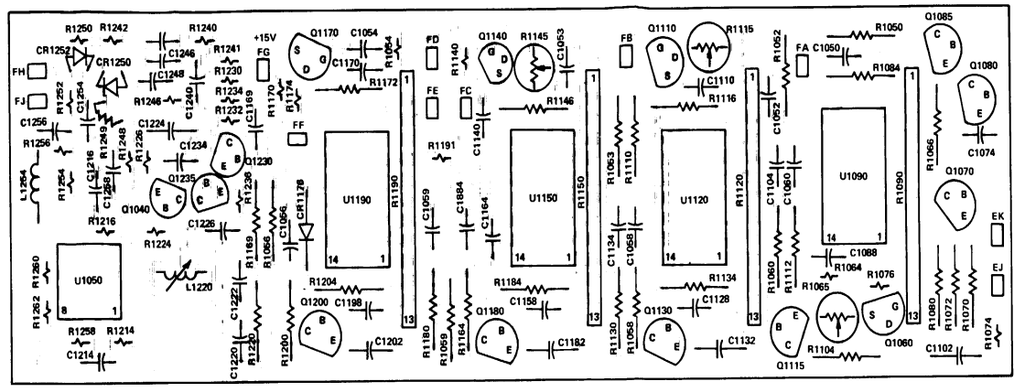

A1000A3 Log/Lin Amplifier

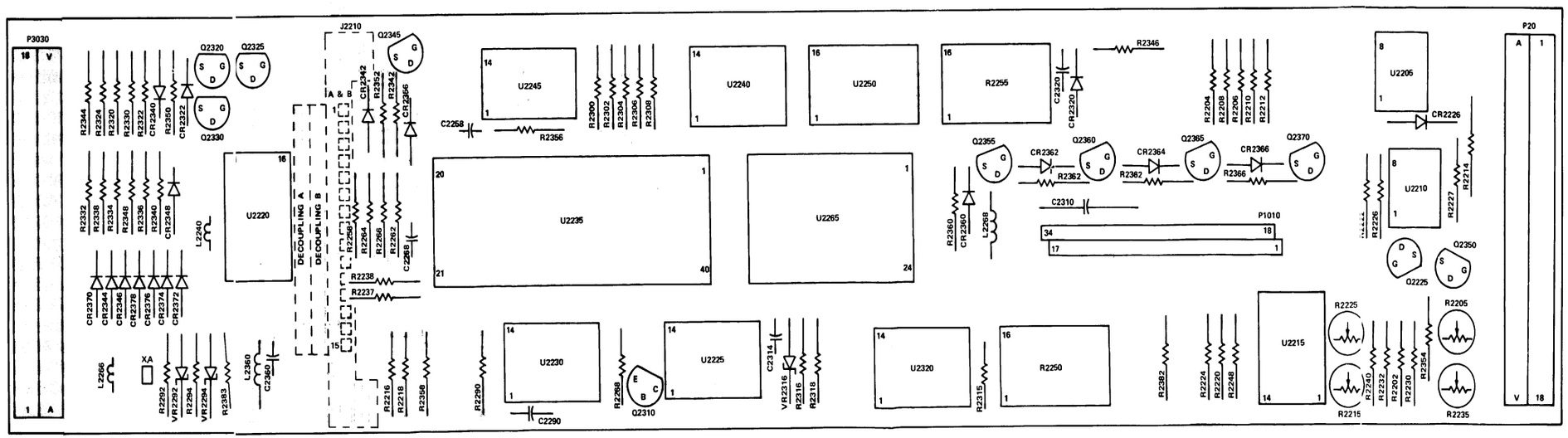

A2000A2 Vertical Control

A1A1 Front Panel component location shown on back of diagram 1 c A1000A1 IF Mother component location shown on back of Diagram 22

A3000 Transverse/Vertical Interface component location shown on back of Diagram 21

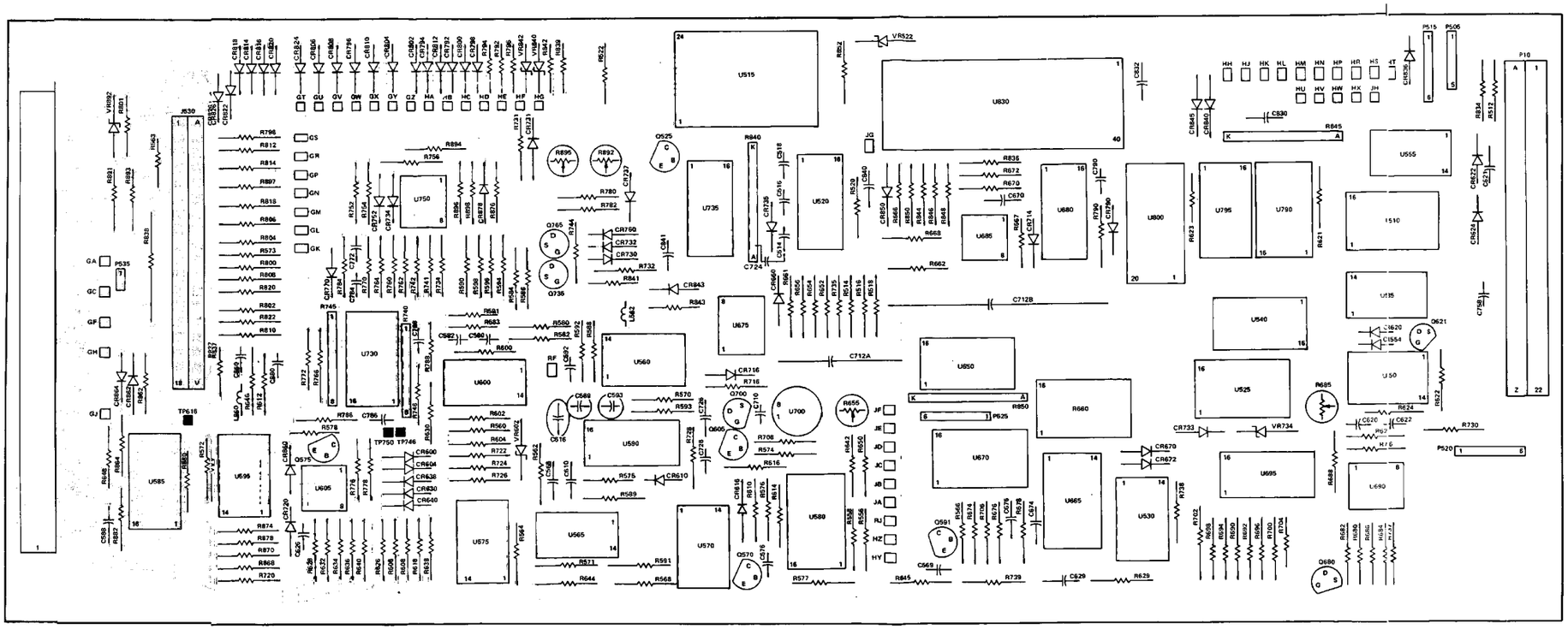

A500 SWEEP

A1A1 Front Panel component location shown on back of diagram (1) c A3000 Transverse/Vertical Interface component location shown on back of Diagram (21)

A100A1 Frequency Reference Mother component location shown on back of Diagram (22) A4500 Digital Storage component shown on back of Diagram (20)

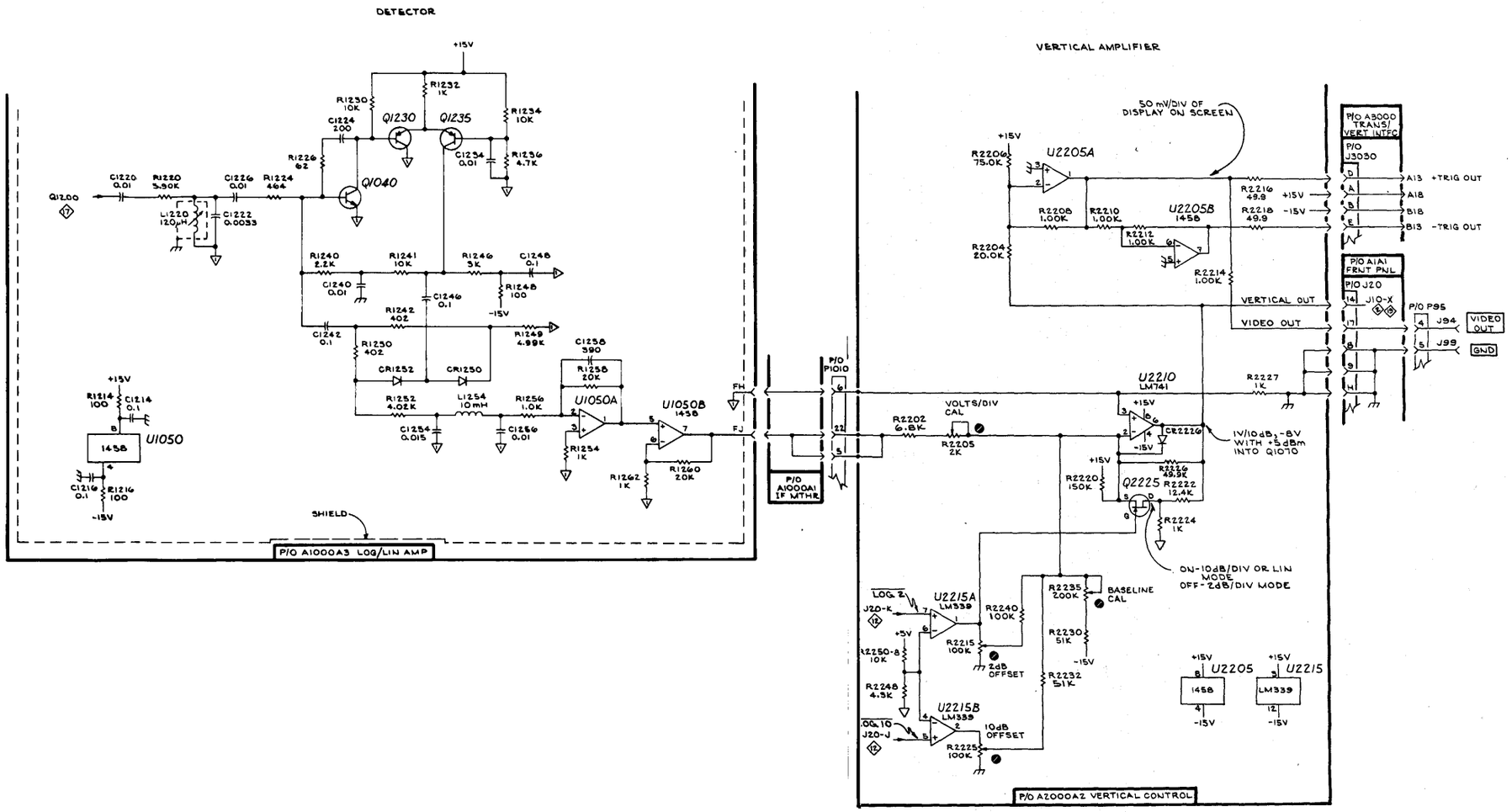
DETECTOR
VERTICAL AMPLIFIER
P/O A1000A3 LOG/LIN AMP
P/O A2000A2 VERTICAL CONTROL
P/O A1000A1 IF MTHR
P/O A8000 TRANS/ VERT INTFC
P/O A1A1 FRNT PNL
50 mV/DIV OF DISPLAY ON SCREEN
VERTICAL OUT
VIDEO OUT
+TRIG OUT
-TRIG OUT
VIDEO OUT
GND
VOLTS/DIV CAL
1V/10dB, -8V WITH +5dBm INTO Q1070
ON-10dB/DIV OR LIN MODE OFF-2dB/DIV MODE
BASELINE CAL
2dB OFFSET
10dB OFFSET
SHIELD

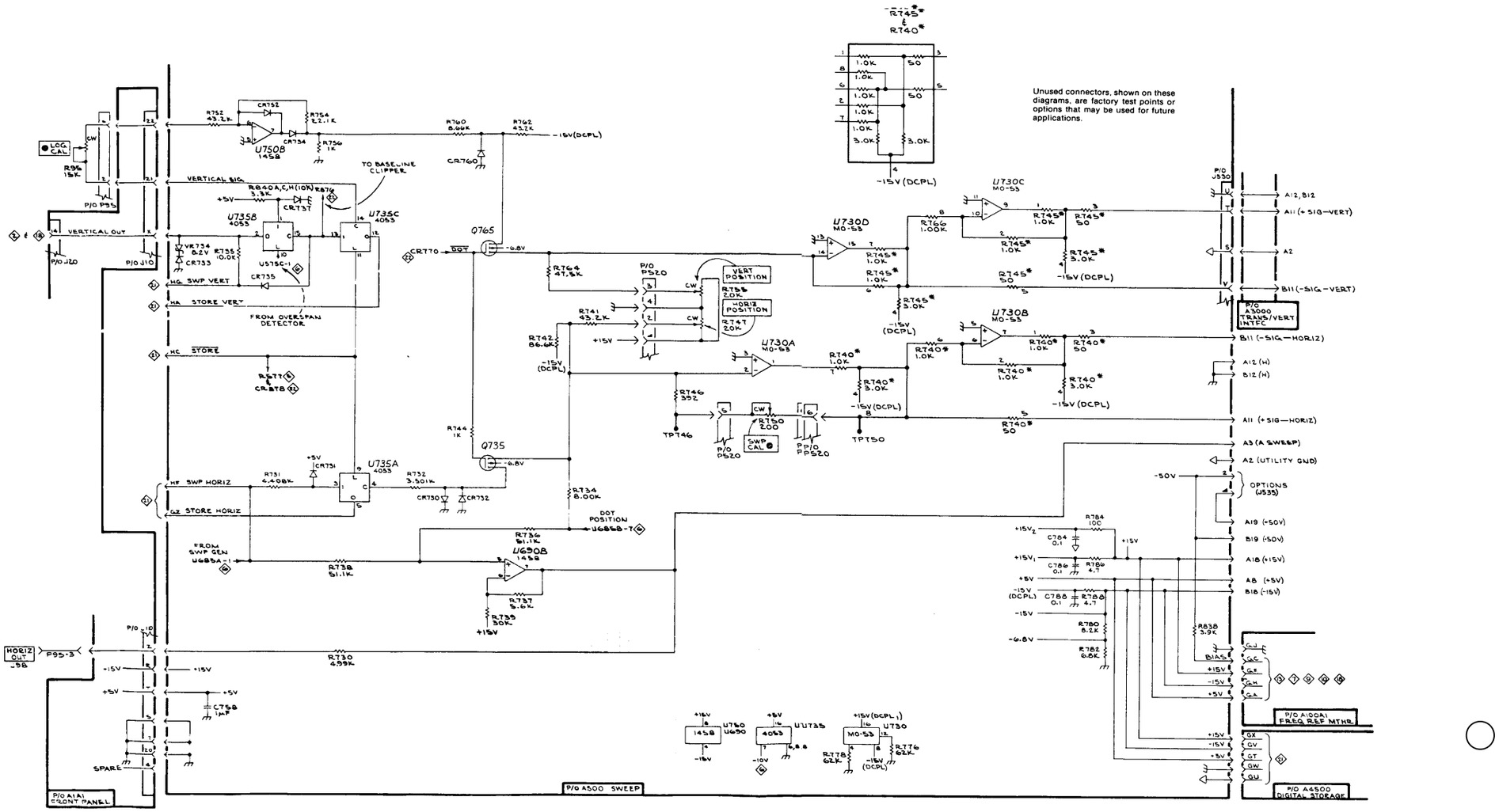
Unused connectors, shown on these diagrams, are factory test points or options that may be used for future applications.
TO BASELINE CLIPPER
FROM OVERSPAN DETECTOR
VERTICAL SIG
VERTICAL OUT
HG SWP VERT
HA STORE VERT
HC STORE
HF SWP HORIZ
GZ STORE HORIZ
HORIZ OUT
FROM SWP GEN
DOT POSITION
VERT POSITION
HORIZ POSITION
SWP CAL
P/O A500 SWEEP
P/O A1A1 FRONT PANEL
P/O A3000 TRANS/VERT INTFC
P/O A1QQA1 FREQ REF MTHR
P/O A4500 DIGITAL STORAGE
OPTIONS (J535)
A12, B12
A11 (+SIG—VERT)
B11 (-SIG—VERT)
B11 (-SIG—HORIZ)
A11 (+SIG—HORIZ)
A3 (A SWEEP)
A2 (UTILITY GND)
A19 (+50V)
B19 (-50V)
A18 (+15V)
A8 (+5V)
B18 (-15V)
BIAS

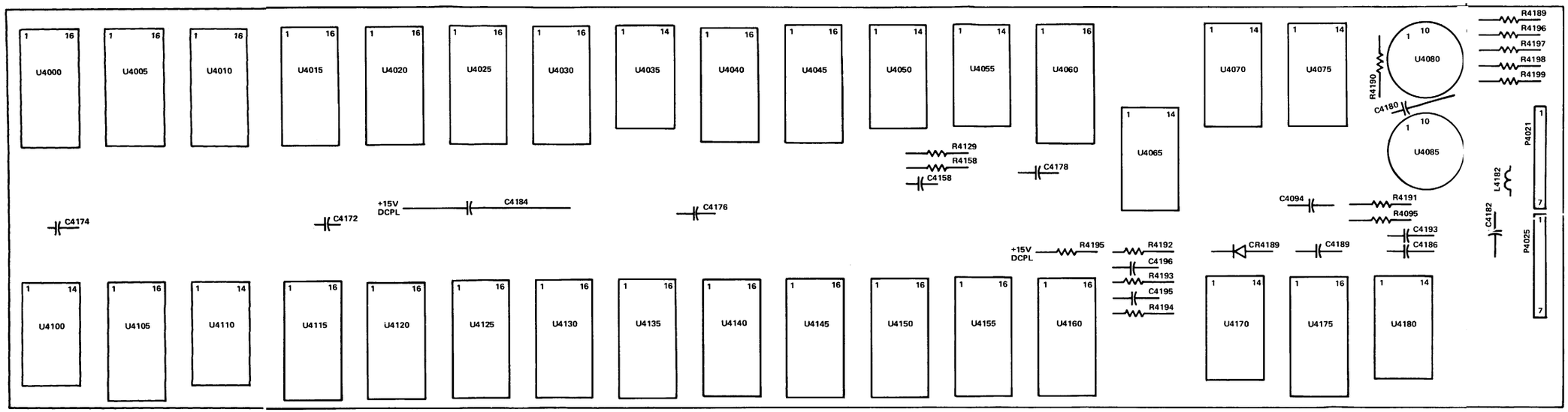

A4000 Digital Averaging

Waveforms shown on this diagram were obtained under the following conditions:

The oscilloscope mainframe contained two dual trace vertical amplifier units (e.g. 7A18) and one time base unit (e.g. 7B70). Oscilloscope settings (Time/Div and Volts/Div) are indicated on the waveform photograph. The triggering is indicated on the waveform.

The 7L5 Digital Averaging circuit board was positioned to the side as shown in the Calibration section (Fig. 4-20). The CALIBRATOR signal is applied to the INPUT. 7L5 control settings are as follows:

SPAN/DIV	0	DISPLAY A and B	ON
RESOLUTION	10 kHz	SAVE A	OFF
Display Mode	10 dB/DIV	Sweep Mode	SGL SWP
REFERENCE LEVEL	−40 dBm	Time/Div	5 ms
DOT FREQUENCY	1 MHz		

1

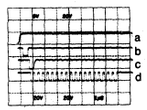

a. U4085, pin 8 (Trigger)
b. U4085, pin 7
c. U4160, pin 9
d. U4100, pin 8
Front panel controls same as Diagram 21, waveform 7.

2

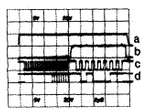

a. U4085, pin 8 (Trigger)
b. U4085, pin 3
c. R4000, pin 6
d. U4110, pin 4
Front panel controls same as Diagram 21, waveform 7

3

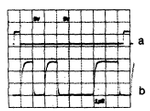

a. Trigger SOURCE from TP4512 (Sync Pulse)
b. U4506, pin 5 (Data Out)

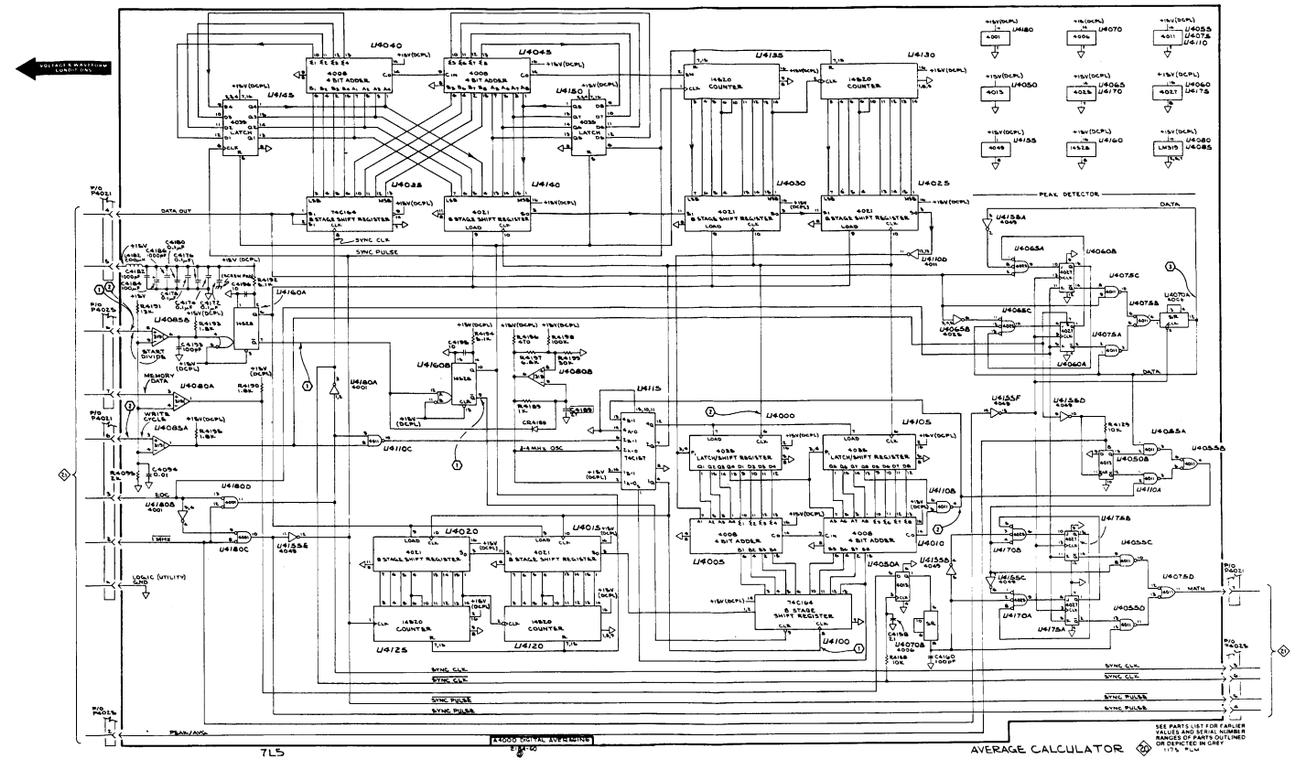

2184-60

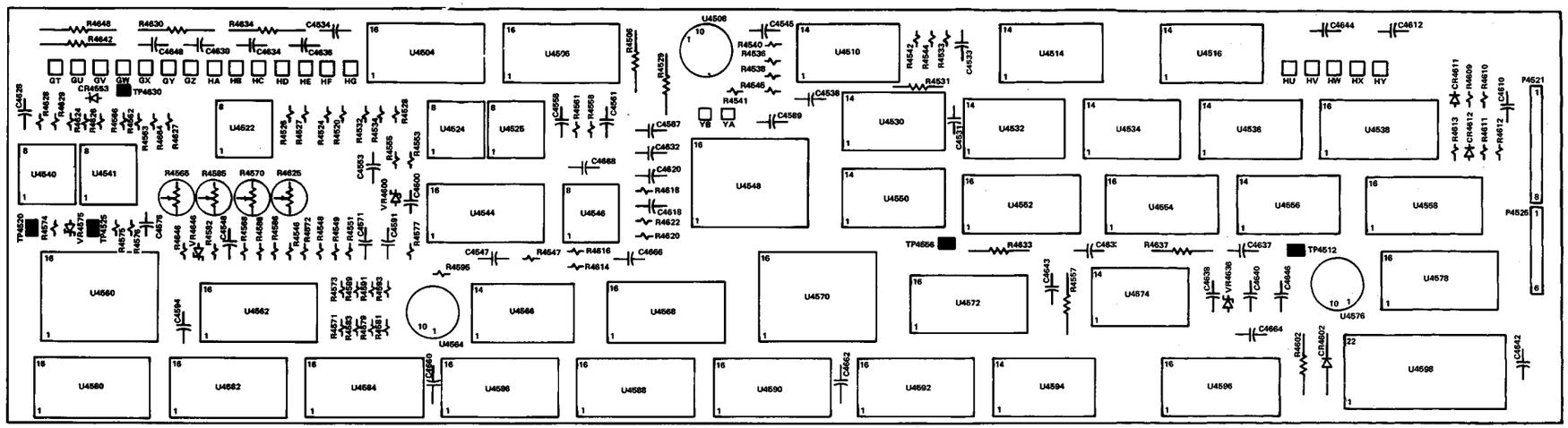

A4500 Digital Storage

A1A1 Front Panel component location shown on back of Diagram 1c

A100A1 Frequency Reference Mother component location shown on back of Diagram 22

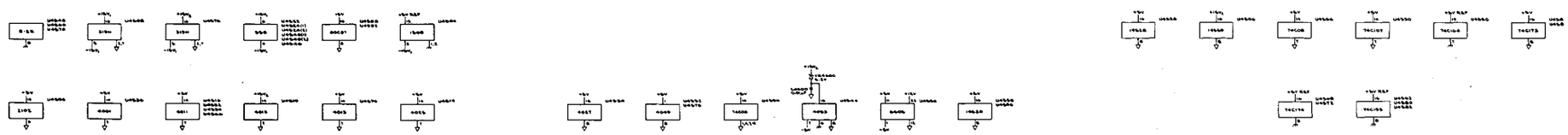

@

Waveforms shown on this diagram were obtained under the following conditions:

The oscilloscope mainframe contained two dual trace vertical amplifiers (e.g. 7A18) and one time base unit (e.g. 7B70). Oscilloscope settings (Time/Div and Volts/Div) are indicated on the waveform. Triggering source and mode are indicated on the waveform.

The 7L5 Digital Averaging circuit board was positioned to the side as shown in the Calibration section (Fig. 4-20). The CALIBRATOR signal was applied to the INPUT.

Waveforms 1, 2, 3, 4, 5 and 6; control settings are as follows:

SPAN/DIV	10 kHz
RESOLUTION	10 kHz
Display Mode	10 dB/DIV
DISPLAY A and B	ON
SAVE A	OFF
Time/Div	5 ms
DOT FREQUENCY	00.0

Waveform 7 and 8; the control settings are the same except as follows:

SPAN/DIV	0
REFERENCE LEVEL	−40 dBm
DOT FREQUENCY	1 MHz

1

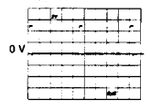

TP4512

2

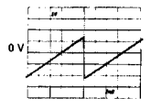

TP4520

0 SPAN, 1 ms/DIV
(Digitized Horiz Sweep)

3

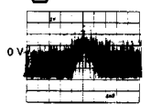

U4556, pin 7
Triggered on signal at TP4556

SGL SWEEP MODE

4

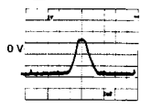

U 4544, pin 14
Triggered on TP4556

SGL SWP ON
Cursor at top

5

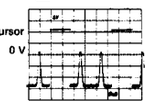

Same as 4 with slow sweep

6

U4570, pin 16
SGL SWP ON

7

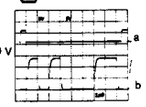

a. TRIGGER SOURCE from TP4512 (Sync Pulse)
b. U4506, pin 5 (Data Out)

8

a. U4550, pin 1
b. U4500, pin 8 (Trigger Source)

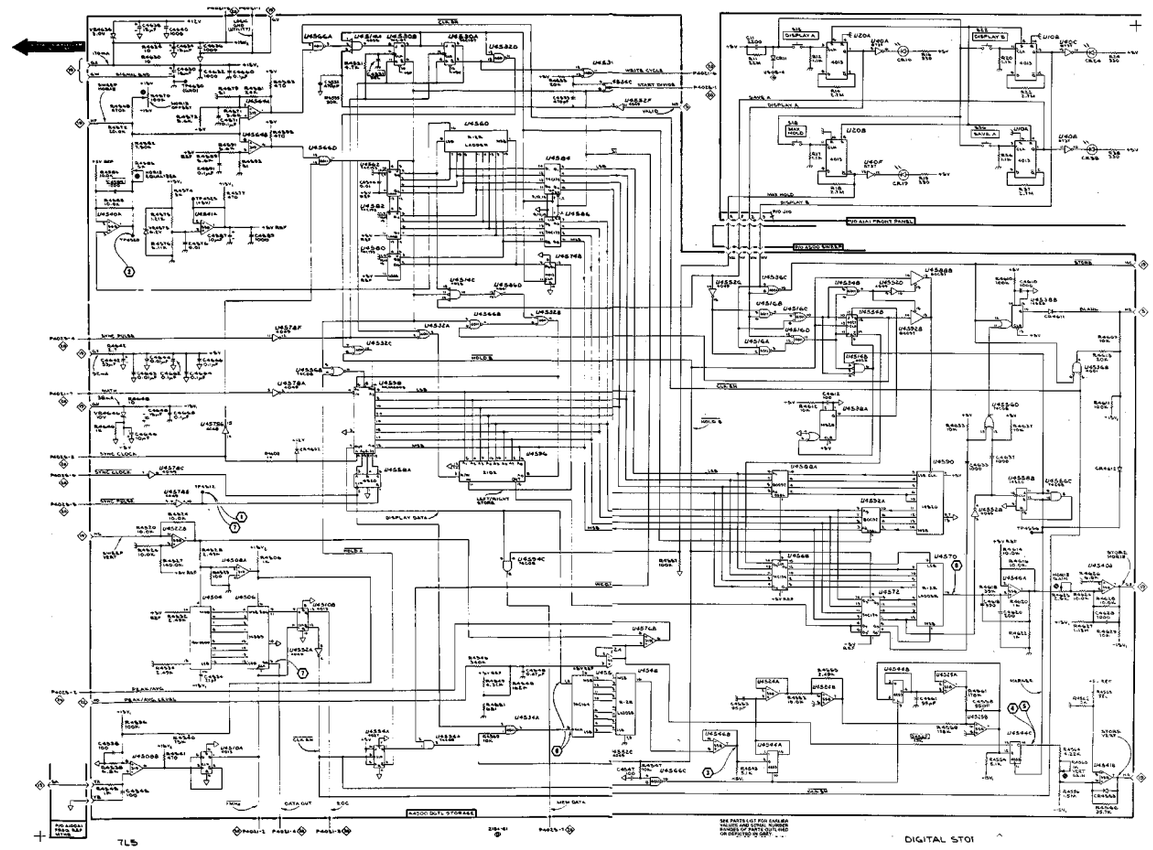

2184-61

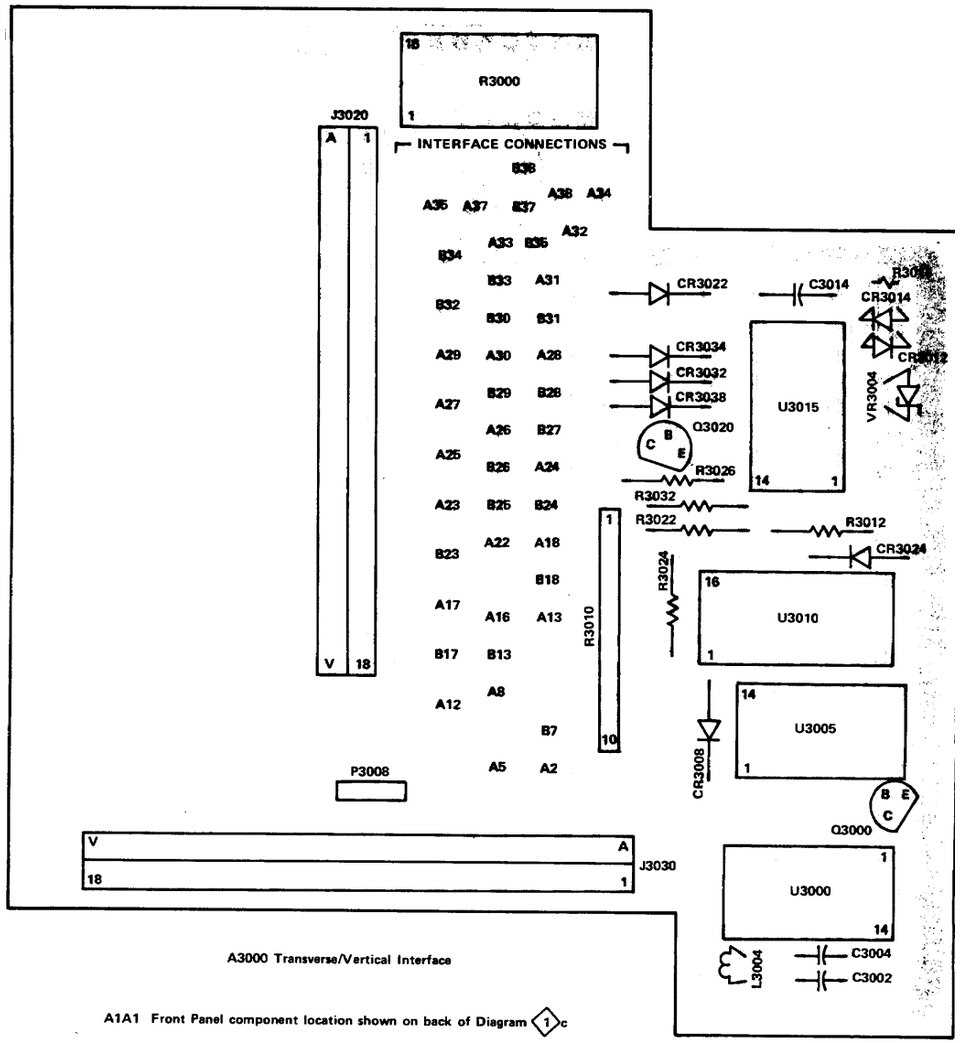

A3000 Transverse/Vertical Interface

A1A1 Front Panel component location shown on back of Diagram 1c

A500 Sweep component location shown on back of Diagram 2

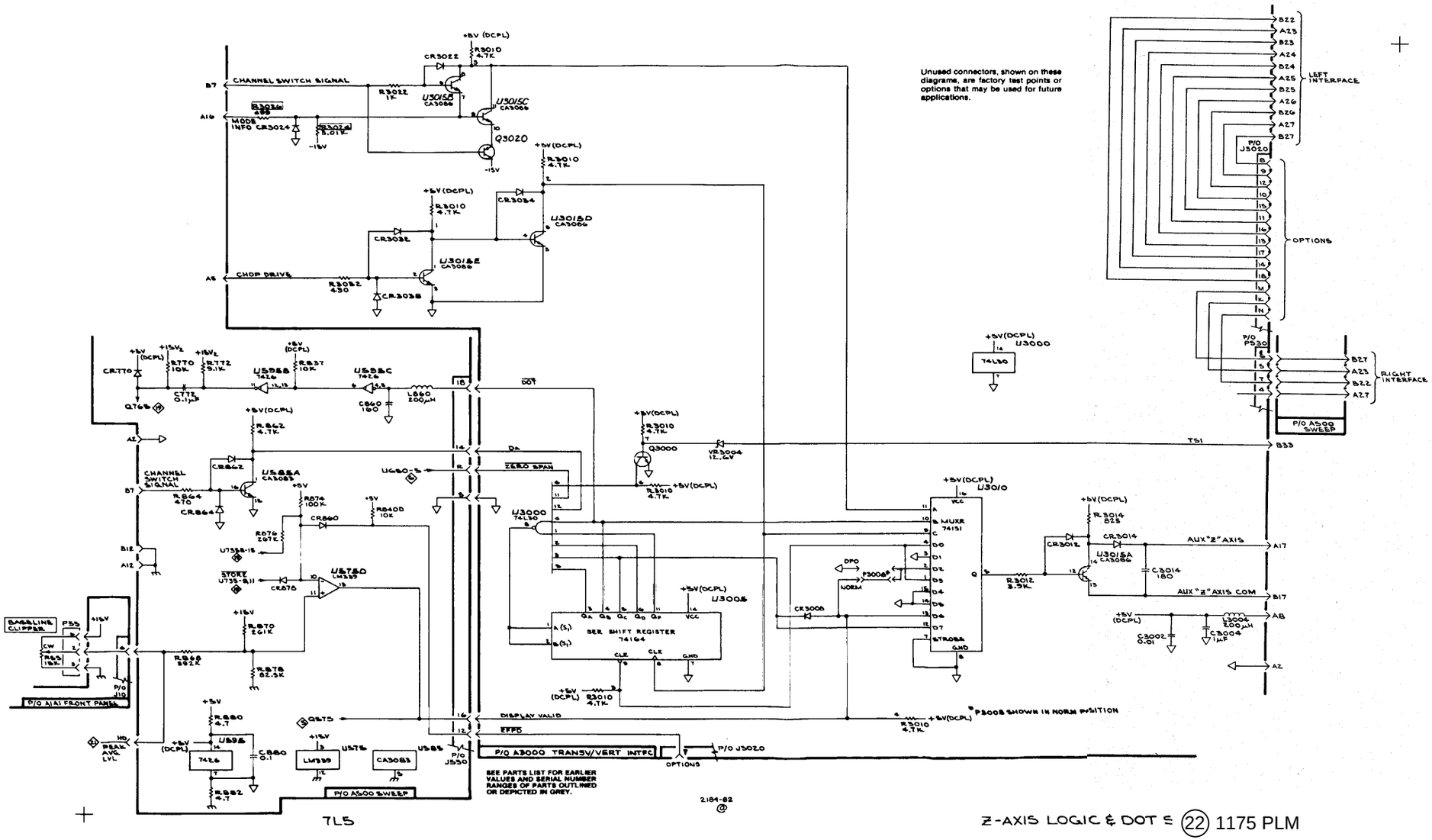
Unused connectors, shown on these diagrams, are factory test points or options that may be used for future applications.
CHANNEL SWITCH SIGNAL
MODE INFO
CHOP DRIVE
LEFT INTERFACE
OPTIONS
RIGHT INTERFACE
P/O A500 SWEEP
DOT
DA
ZERO SPAN
TS1
AUX "Z" AXIS
AUX "Z" AXIS COM
BASELINE CLIPPER
P/O A1A1 FRONT PANEL
DISPLAY VALID
EFFD
P/O A3000 TRANSV/VERT INTFC
P/O J3020
OPTIONS
P3008 SHOWN IN NORM POSITION
BEE PARTS LIST FOR EARLIER VALUES AND SERIAL NUMBER RANGES OF PARTS OUTLINED OR DEPICTED IN GREY.
2184-62
7L5
Z-AXIS LOGIC & DOT ≡ 22 1175 PLM

2184-62

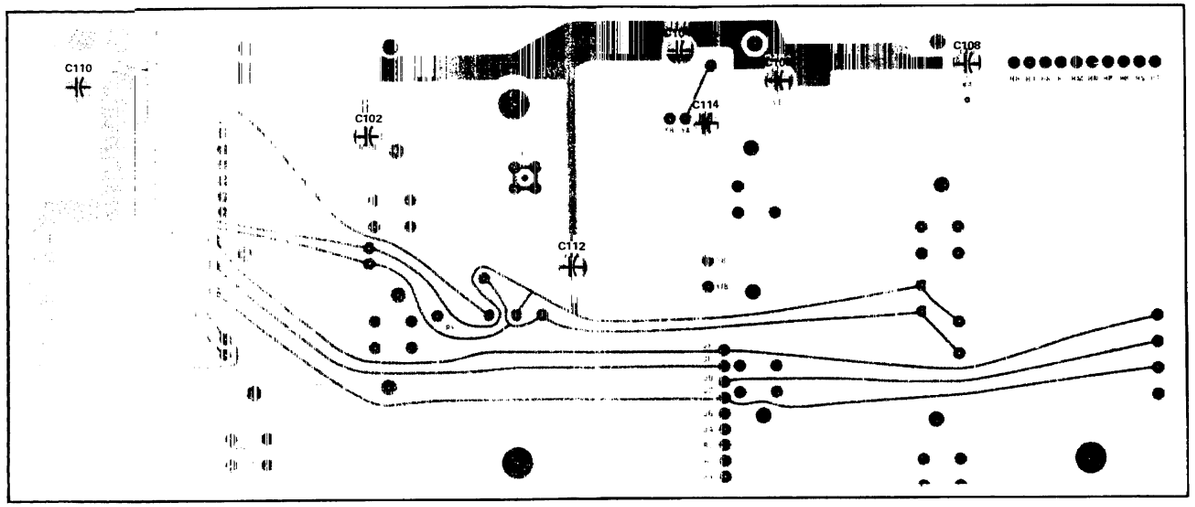

A100A1 Frequency reference Mother

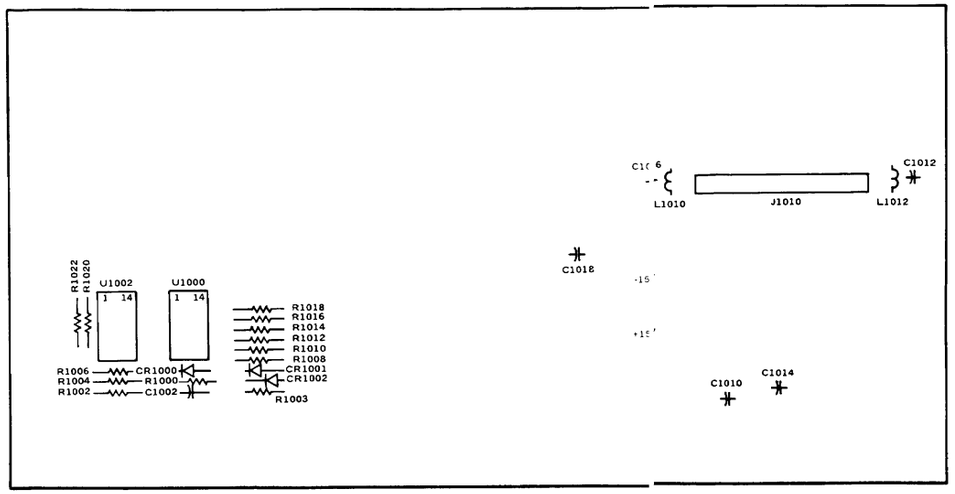

A1000A1 IF Mother

@

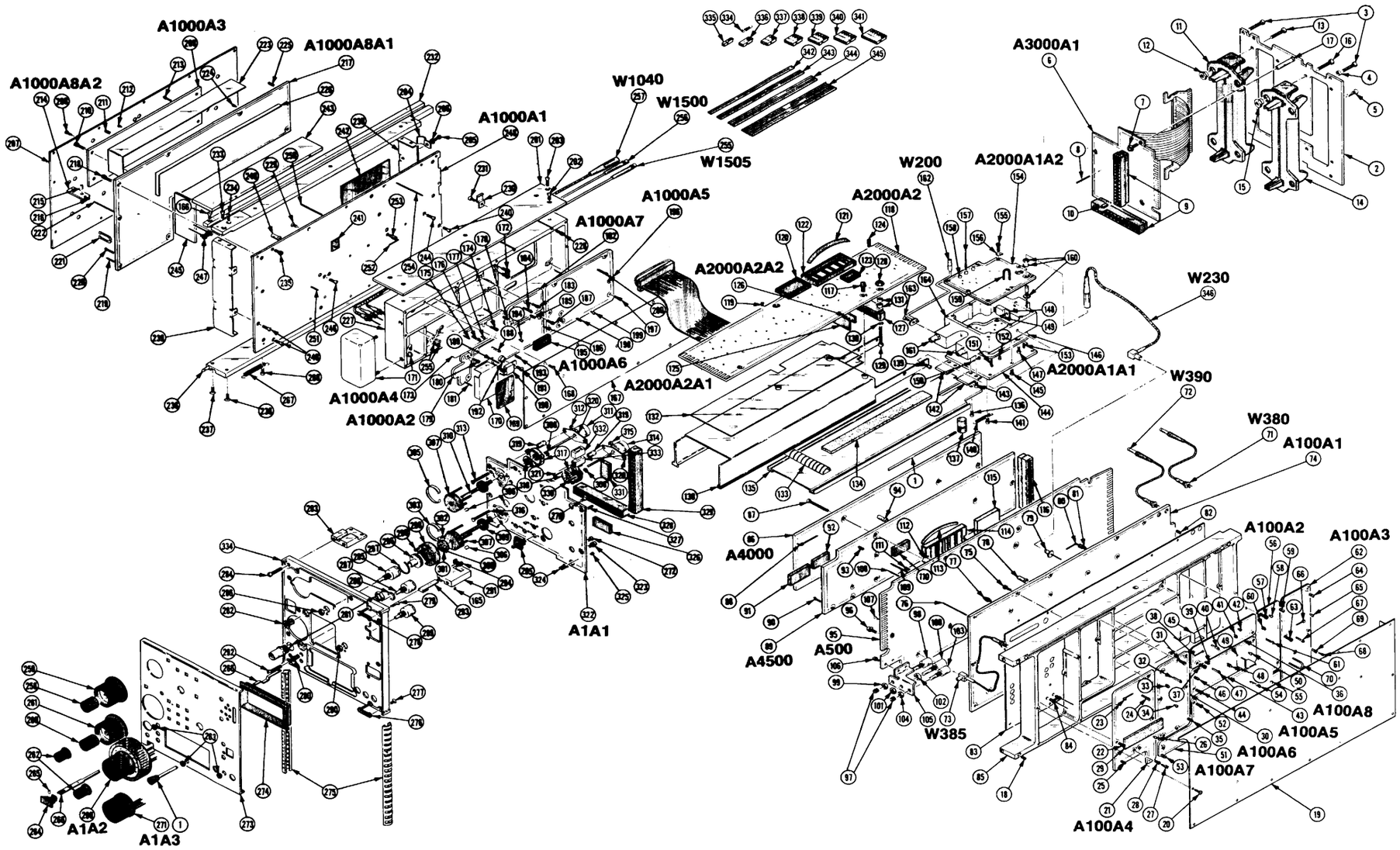

7L5 SPECTRUM ANALYZER

@

By Order of the Secretary of the Army:

BERNARD W. ROGERS
General, United States Army
Chief of Staff

Official:

J.C. PENNINGTON
Brigadier General, United States Army
The Adjutant General

Distribution:

Active Army:

TSG (1)
USAARENBD (1)
USAINSCOM (2)
TRADOC(2)
DARCOM (1)
TECOM (2)
OS Maj Comd (2)
USACC (2)
HISA (Ft Monmouth) (26)
Armies (1)
USASIGS (10)
Svc Colleges (1)
Ft Huachuca (5)
Ft Richardson (CERCOM Ofc) (1)
WSMR (1)
Fort Carson (5)
USAERDAA (1)
USAERDAW (1)
Army Dep (1) except
LBAD (10)
SAAD (30)
TOAD (14)
SHAD (3)
Fort Gillem (10)
USA Dep (1)
Sig Sec USA Dep (1)
Units org under fol TOE:
(1 copy each)
29-134
29-136
(2 copies each)
29-207
29-610

*N*G: State AG (0); Units-None

USAR: None

For explanation of abbreviations used, see AR 310-50.

RECOMMENDED CHANGES TO EQUIPMENT TECHNICAL PUBLICATIONS

THEN. . JOT DOWN THE DOPE ABOUT IT ON THIS FORM, CAREFULLY TEAR IT OUT, FOLD IT AND DROP IT IN THE MAIL!

SOMETHING WRONG WITH THIS PUBLICATION?

FROM: (PRINT YOUR UNIT'S COMPLETE ADDRESS)

DATE SENT

PUBLICATION NUMBER	PUBLICATION DATE	PUBLICATION TITLE
TM 11-5825-270-10	23 Jul 81	Radio Frequency R-2176/FRN

BE EXACT. . .PIN-POINT WHERE IT IS

PAGE NO.	PARA-GRAPH	FIGURE NO	TABLE NO.

IN THIS SPACE TELL WHAT IS WRONG AND WHAT SHOULD BE DONE ABOUT IT:

PRINTED NAME, GRADE OR TITLE, AND TELEPHONE NUMBER

SIGN HERE:

DA FORM 1 JUL 79 2028-2

PREVIOUS EDITIONS ARE OBSOLETE.

P.S.—IF YOUR OUTFIT WANTS TO KNOW ABOUT YOUR RECOMMENDATION MAKE A CARBON COPY OF THIS AND GIVE IT TO YOUR HEADQUARTERS.

TEAR ALONG PERFORATED LINE

PIN: 035348-000