SERVICE MANUAL

SANYO

DIGITAL CLOCK RADIO

RM 5900

(U.S.A)

SPECIFICATIONS

Frequency ranges:	AM 525 – 1615 kHz
	FM 88 – 108 MHz
Intermediate frequency:	AM 457 kHz
	FM 10.7 MHz
Sensitivity (for 50mW output):	AM 280 μV/m
	FM 10μV (S/N = 30 dB)
Output power:	Maximum 400 mW
	Undistorted 300 mW
LSI:	1
Transistor:	13
Diode:	22
Power source:	AC 120V, 60Hz
Speaker:	77 mm, 8 ohm
Dimensions:	250 mm (W) x 80 mm (H) x 175 mm (D) Approx.
Weight:	1.5 kg Approx.

NOTE: Specifications are subject to change without notice.

DISASSEMBLY

1. Disconect the A. C. power cord.
2. Remove the tuning control and the volume control knob. (Don't remove other control knobs.)
3. Remove the 3 screws on the bottom.

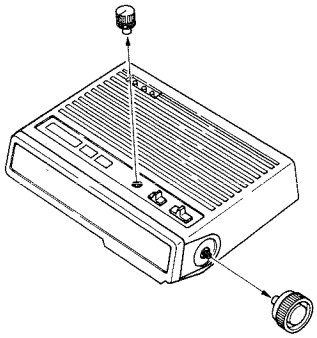

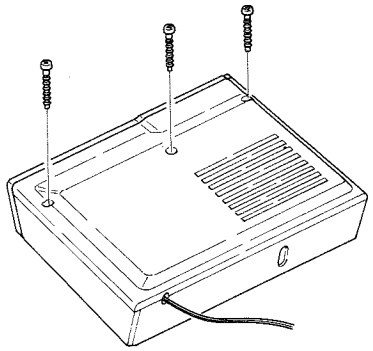

4. Hold the set with both hands as shown in the figure. Push the front panel with the left thumb, and remove the front panel.
5. In order to keep it off the tuning shaft, first raise the left side upward, then move the top cover toward the tuning shaft side, and place the top cover up side down.

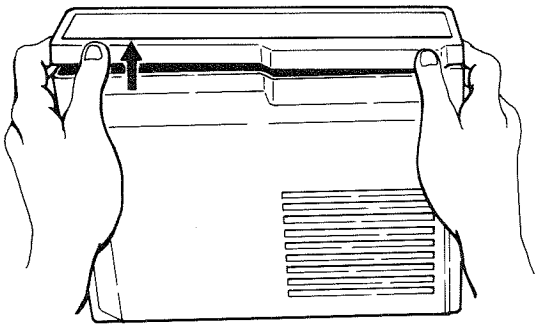

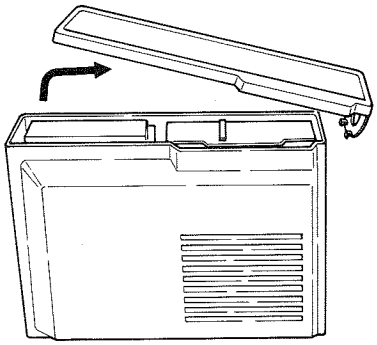

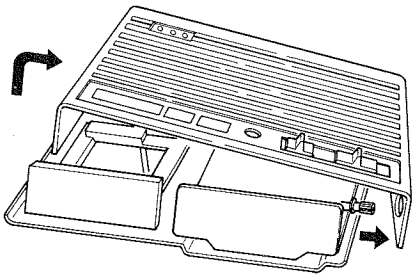

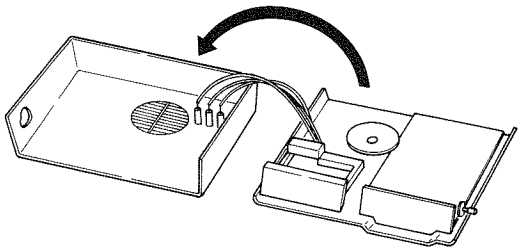

6. Disconect the latch (circle in the figure,) and remove the radio circuit board.
   Make an identibying mark on each of two slide switches before its removal.
7. Disconect the latch (circle in the figure,) and remove the clock circuit board.

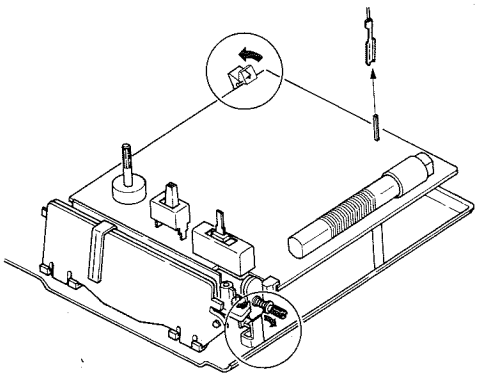

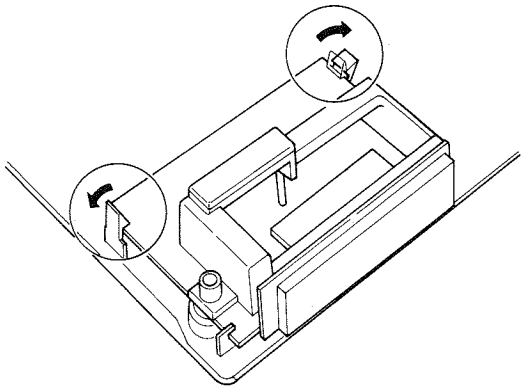

DISASSEMBLY

8. Wiring joints or conection of jumper wires have been secured by using spesial tools.
   If disconection is made, be sure to re-conect it by using solder.
9. For re-assembly, dress the wires as neatly as shown in figure. If otherwise, difficulty will be experienced in the assembling.
10. For re-assembly, be sure to fit each slide knob on to each switch.

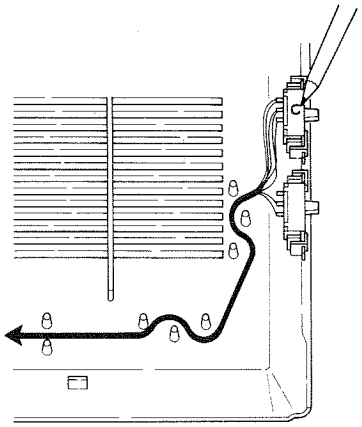

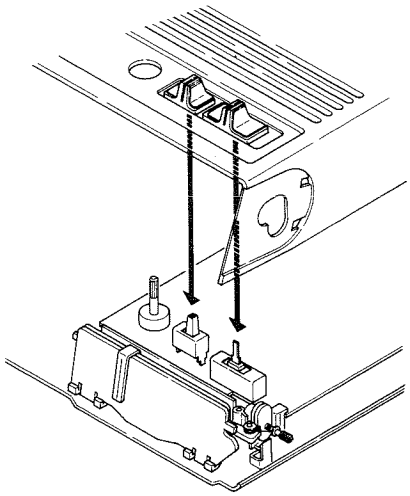

DIAL CORD STRINGING

1. Prepare dial cord and tension spring as shown bellow.
2. Place the circuit board its copper-side up.
   First place the drum in such a position as it provides a minimam capacitance for tuning gang.
   Hook a free end of the spring to the drum at "A" point and thread the cord as shown by starting from No. 1 through No. 7.
   Please give if four-turns around a tuning shaft at No. 5. Pass it through 3 and 4, and hold it temporarily at 6.
   Fit the other end 7 of the cord two turns in the arrow direction around the drum and finally.
3. Place the circuit board its copper-side down and apply sillcon grease to a pointer (at an area as shown in the figuer.)
   Engage the pointer with the cord and locate the pointer at the "0" point, fasten if with adhesine.

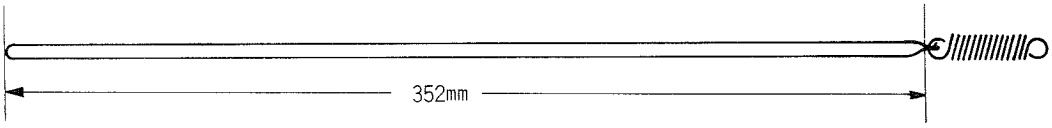

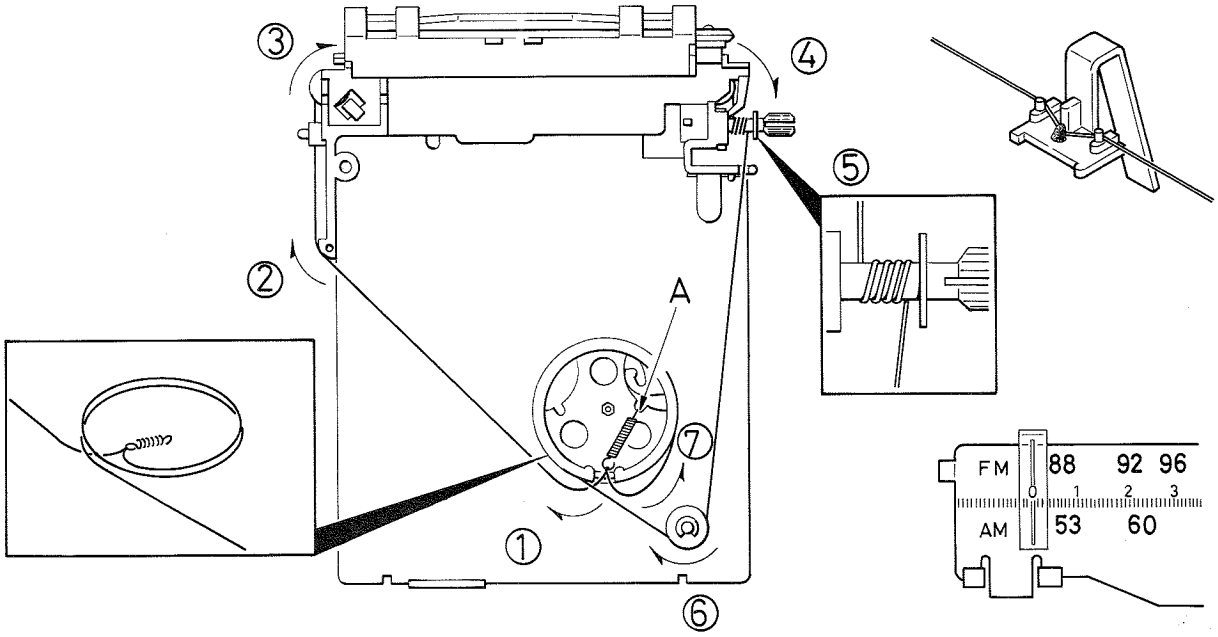

ALIGNMENT PROCEDURES

GENERAL ALIGNMENT CONDITIONS

1. The position of volume control is at maximum position.
2. Signal input must be kept as low as possible to avoid overload.
3. Use an output meter of the highest possible sensitivity.
4. Standard modulation is 400 Hz at 30% amplitude (for AM) and 22.5 kHz deviation (for FM).

AM BAND – Band selector switch in AM position

Step	Connection of Signal Gen.	Input Signal Frequency	Dial Setting of Radio	Connection of Output Meter	Adjust	Remarks
1	Loop Antenna	457 kHz	Lowest End	Across Speaker	IFT T306,T307, 308	Adjust for Maximum
2	Same	505 kHz	Lowest End	Same	Osc. Coil L108	Same
3	Same	1650 kHz	Highest End	Same	Osc. Trim VCT3	Same
4	Same	600 kHz	600 kHz	Same	Ant. Coil L107	Same
5	Same	1400 kHz	1400 kHz	Same	Ant. Trim VCT-4	Same

Repeat steps 2 thru 5 to obtain maximum sensitivity.

FM BAND – Band selector switch in FM position

Step	Connection of Signal Gen.	Input Signal Frequency	Dial Setting of Radio	Connection of Meter or Oscilloscope	Adjust	Remarks
1	Connect Sweep Marker Generator VCT-1, Ground	10.7 MHz	Lowest End	Connect scope input cable thru network to R321, Ground	IFT T301, 302 303,304	Adjust for maximum sensitivity with symmetrical curve.
2	Same	10.7 MHz	Lowest End	Connect scope input cable turn network to R328, Ground	IFT T305	Adjust for symmetrical "S" curve.
3	Connect Signal Generator to Ant, Ground	87.0 MHz	Lowest End	Connect V.T.V.M. across speaker	Osc. Coil L106	Adjust for maximum
4	Same	109.0 MHz	Highest End	Same	Osc. Trimmer VCT1	Same
5	Same	90 MHz	90 MHz	Same	RF Coil L104	Same
6	Same	106 MHz	106 MHz	Same	RF Trimmer VCT2	Same

Repeat steps 3 thru 6 to obtain maximum sensitivity.

PARTS LOCATION

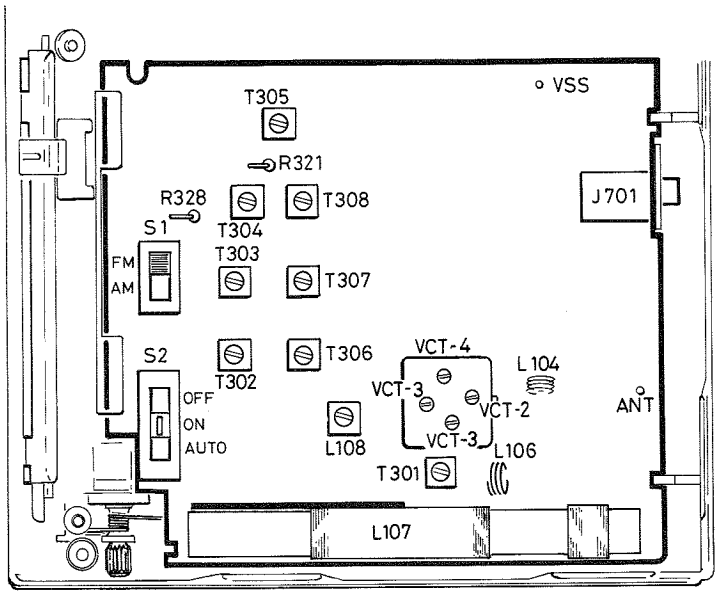

HANDLING AND REPAIR OF L. S. I.

This unit incorporates circuitry which makes wide use of LSI's.
Although LSI's themselves feature high reliability and semi-parmanent life. It should be noted that they can be damaged if exposed to static electricity which is easily generated by mere human touch or careless handling.
To prevent this, therefore, carefully read the following coutions before servicing unit.

1. Notes for transportation and storage

1) LSI's should be stored in the pack in which they are originally supplied because this pack is especially designed for optimum storage.
   Avoid storage in a plase where the temprature or humidity is high, or where there is a storong magnetic field.
2) Be sure to keep their tarminals inserted in the conductive urethan foam until immadiate use. (Each terminal should be at the same potential.)
   They should be taken out from the foam for the on-the-spot use.
3) When handling LSI's, take care not ot touch the terminals directly.
   Pinch the LSI with your forefinger and thumb applied against their each end.

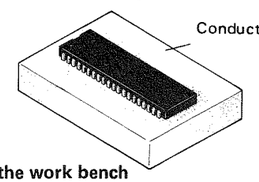

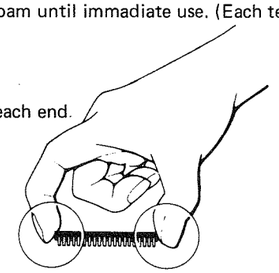

Do not touch terminals

2. Notes concerning the work bench

1) Be sure to disconect the AC power cord.
2) Plase a conductive sheet (a plastic sheet treated so as to be conductive) on the work bench and ground it before begining the work.
3) Ground all measuring instruments and tools.
4) Be especially sure to ground a metallic part of the solding iron in order to avoid possible AC leakage.
5) The serviceman should wear a conductive bracelet by which he is grounded.

3. Notes concerning repair

1) After exposing the inside circuitry, first discharge electrolytic capacitors C-751 and C-716.
2) If a multimeter is used, use only the ranges for current and voltage measure ments but not for resistance measurement.
3) LSI's have a mark on one end in order to provide correct terminal.
   If an LSI's incorrectly inserted by mistake, it should be dis carded. (Such an LSI will become defective during use, even though it first seems to function normaly.)
4) Care should be taken even during repairing the radio section becouse the naked metal part of the clock section is leading to the terminals of the LSI's.
5) Do not wipe with a cloth made of any synthetic fiber.
   Use only a static-free-processed cloth for cleaning the unit or the curcuit board.

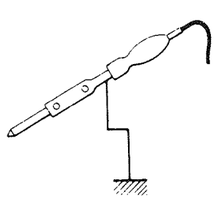

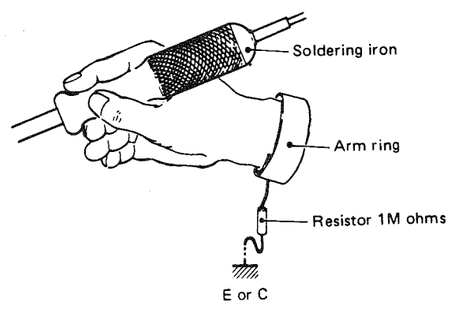

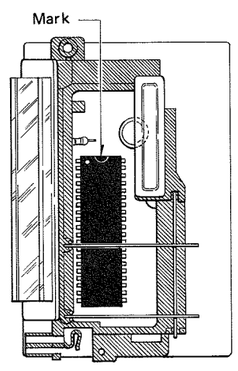

SCHEMATIC DIAGRAM (CLOCK)

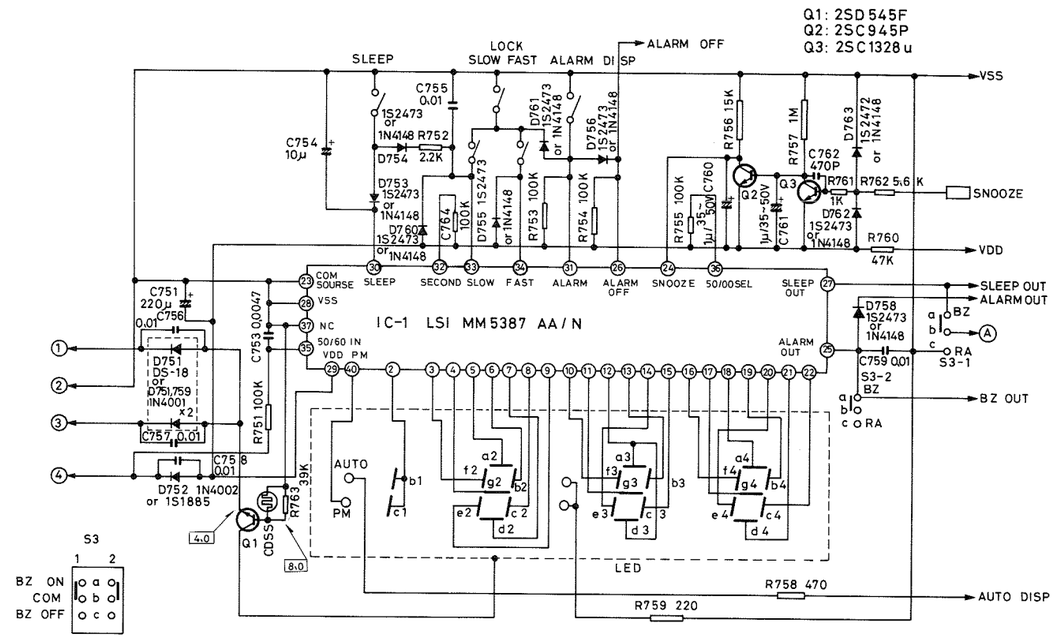

CONNECTION DIAGRAM

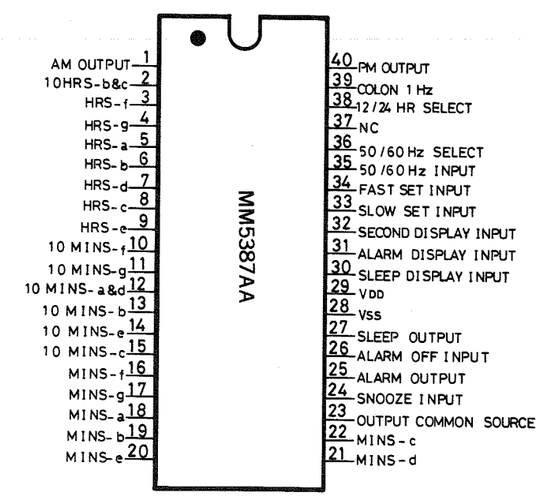

SCHEMATIC DIAGRAM (RADIO)

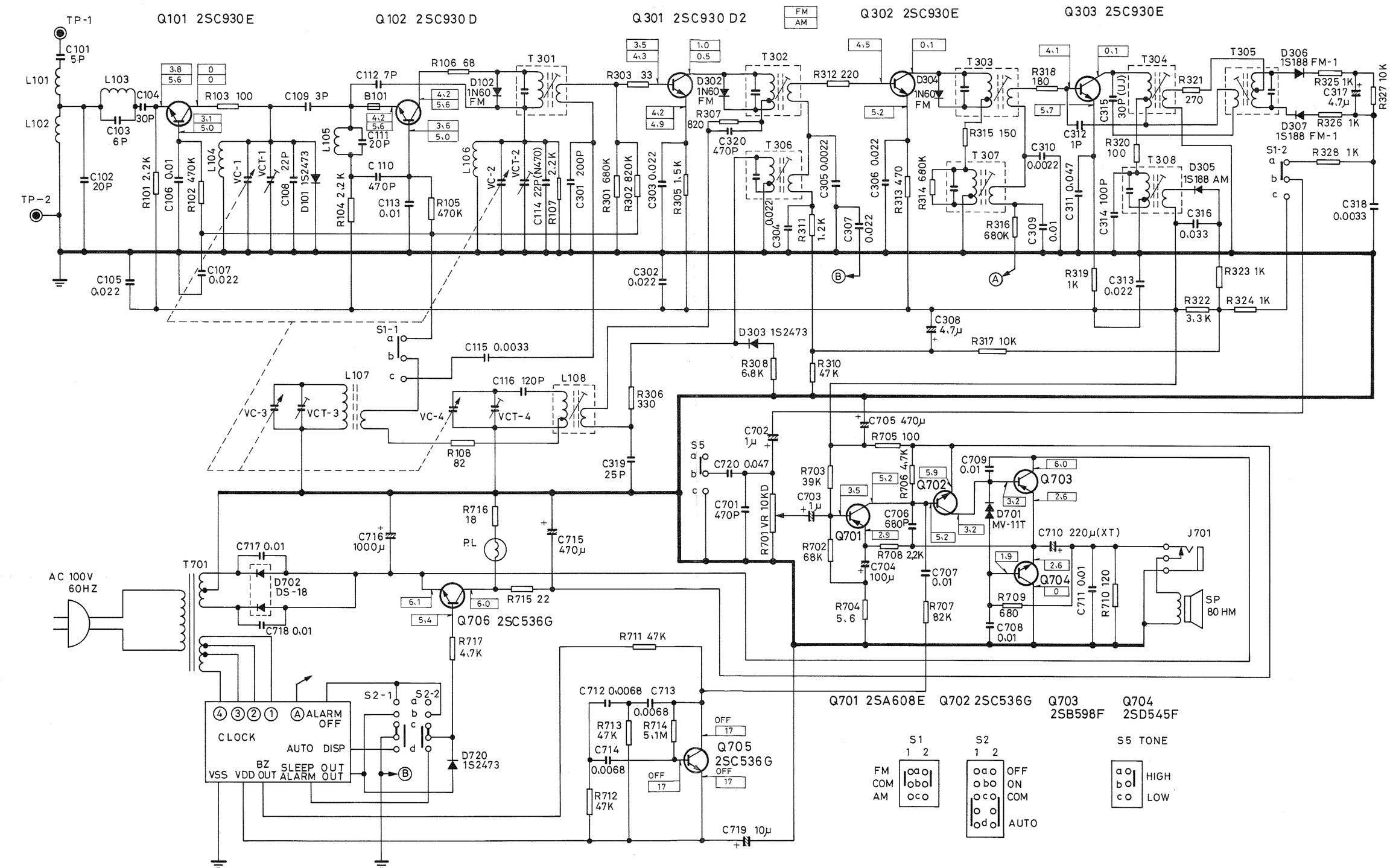

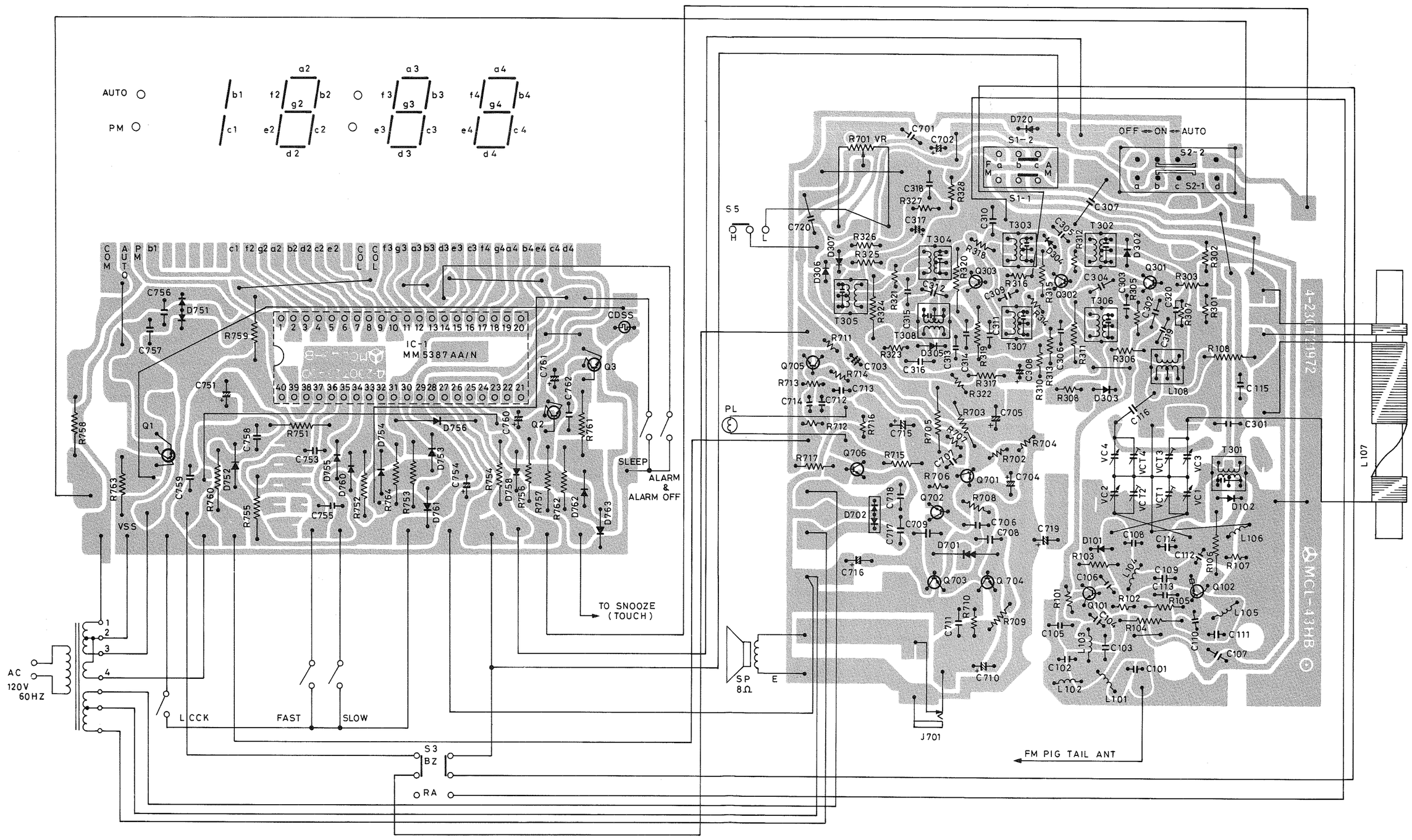
AUTO
PM
IC-1
MM5387AA/N
CDSS
SLEEP
ALARM & ALARM OFF
TO SNOOZE (TOUCH)
AC 120V 60HZ
LCCK
FAST
SLOW
S3
BZ
RA
VSS
PL
SP 8Ω
E
J701
FM PIG TAIL ANT
S5
H
L
OFF ← ON ← AUTO
S1-1
S1-2
S2-1
S2-2
L107
MCL-43HB

PARTS LIST

Ref. No.	Part No.	Description	Q'ty
PACKING, CABINET & CHASSIS			
	141-6-132T-78000	Individual Carton	1
	141-6-144T-40100	Pad, Left	1
	141-6-144T-40200	Pad, Right	1
	141-6-411T-98400	Instruction Book	1
	141-6-231T-04001	Polyethylene Bag, Set	1
	141-6-231T-06400	Polyethylene Bag, Power Cord	1
	141-6-479T-17600	Label, Cabinet mtg.	1
	141-9-124T-05800	Top Lid Assembly	1
	141-9-122T-04900	Front Panel Assembly	1
	141-9-311T-04200	Chassis Assembly, Radio	1
	141-9-311T-04300	Chassis Assembly, Clock	1
	141-2-125T-11600	Bottom Lid	1
	141-2-163T-41800	Rotary Knob, TUNING	1
	141-2-163T-41900	Rotary Knob, VOLUME	1
	141-2-164T-20000	Slide Knob, FUNCTION	1
	141-2-164T-20100	Slide Knob, BAND	1
	141-2-161T-40900	Push Button, SLEEP	1
	141-2-161T-41000	Push Button, ALARM SET	1
	141-2-447T-00800	Cushion, 5 x 14mm, Bottom Lid mtg.	1
	141-0-566T-03300	Tuning Shaft Assembly	1
	141-2-661T-21400	Pulley	2
	141-2-661T-16000	Pulley	1
	123-2-567R-10900	Pulley Shaft	1
	141-2-457T-23000	Special Washer, Pulley mtg.	1
	123-2-538R-00400	Drum	1
	141-2-511T-11400	Pointer	1
	141-2-340T-00100	Dial Rope, 0.3ϕ	1
	123-2-481R-00800	Sprint Coil, Dial Rope	1
	141-2-374T-10700	Bracket, PL	1
	141-2-447T-16700	Cushion, 10 x 10 x 6mm, Antenna mtg.	1
	141-2-852T-43100	Spring Wire, SLEEP, ALARM	2
	141-2-382T-07600	Terminal	1
ELECTRICAL			
Q101,302 303		Transistor, 2SC930E	3
Q102,301		Transistor, 2SC930D	2
Q701		Transistor, 2SA608E	1
Q702		Transistor, 2SC536G	1
Q703		Transistor, 2SB598F	1
Q704		Transistor, 2SD545F	1
Q705,706		Transistor, 2SC536G or H (a pair)	2
D101, 719, 720		Diode, 1S2473	3
D102, 302, 304		Diode, 1N60	3
D303		Diode, 1S2473	1
D305		Diode, 1S188AM	1
D306,307		Diode, 1S188FM	2
D701		Diode, MV11T	1
D702		Diode, DS18	1
Q1		Transistor, 2SD545F	1
Q2		Transistor, 2SC945P	1
Q3		Transistor, 2SC1328U	1
D751		Diode, DS18	1
D752		Diode, 1N4002 or 1S1885	1
D753,754 755,756		Diode, 1S2473 or 1N4148	4
D758,760 761,762		Diode, 1S2473 or 1N4148	4
D768		Diode, 1S2472	1
ICI		LSI, MM5387 AA/N, Clock	1
LED		LED, SL146211B or SL146211C, Clock	1
L101,102	4-265R-15100	VHF Coil	2
L103,104	4-265R-12000	VHF Coil	2
L105	4-265R-12600	VHF Coil	1
L106	4-265R-12500	VHF Coil	1
L107	4-257T-09004	Antenna Coil	1
L108	4-258T-13240	Oscillator Coil	1
T301	4-256R-20810 or 4-256R-20812	IF Transformer	1
T302	4-256R-19510 or 4-256R-19512	IF Transformer	1

Ref. No.	Part No.	Description	Q'ty
ELECTRICAL			
T303	4-256R-15810 or 4-256R-15812	IF Transformer	1
T304	4-256R-15111 or 4-256R-15112	IF Transformer	1
T305	4-256R-02310 or 4-256R-02312	IF Transformer	1
T306,307	4-256R-00110 or 4-256R-00112	IF Transformer	2
T308	4-256R-00210 or 4-256R-00212	IF Transformer	1
T701	4-251T-67700	Power Transformer	1
	4-151T-11000	Speaker	1
	4-243T-77373	Power Cord	1
	4-612T-05504	Lamp, 6V 30mA	1
S1	4-231T-67300	Switch, BAND	1
S2	4-231T-54571	Switch, FUNCTION	1
S3	4-231R-14571	Slide Switch, BUZZER	1
S5	4-231T-43871	Slide Switch, TONE	1
	141-2-382T-07100	Terminal, Power Cord	2
	141-2-464T-08700	Fixer	1
	4-980T-00100	CdSS	1
B101	123-2-471R-10400	Bead Core	1
	4-235T-34600	Socket, Antenna	1
	141-2-472T-01201	Lug	1
	4-235T-29900	Socket, Earphone	1
	4-237T-00100	Terminal Board	28
	140-9-230T-27700	P.C.B. Assembly, Radio	1
	140-9-230T-27400	P.C.B. Assembly, Clock	1
RESISTORS All Resistors are Carbon P-type ¼W, ±10%, unless otherwise noted.			
R704		5.6 ohm	1
R716		18	1
R715		22	1
R303		33	1
R106		68	1
R103,320, 705		100	3
R710		120	1
R108,315		150	2
R318		180	1
R312		220	1
R321		270	1
R306		330	1
R313		470	1
R709		680	1
R307		820	1
R319,323, 324,325, 326,328		1K	6
R311		1.2K	1
R305		1.5K	1
R101,104, 107,108		2.2K	4
R322		3.3K	1
R706,717		4.7K	2
R308		6.8K	1
R317,327		10K	2
R703		39K	1
R310,711 712,713		47K	4
R702		68K	1
R707		82K	1
R102,105 314		470K	3
R316		680K	1
R301,302		820K	2
R714		5.1M	1
R701	4-222T-40200	Variable Resistor, VOLUME	1
CAPACITORS			
C312		Ceramic, 1pF, ±0.25pF, 50V	1
C109		Ceramic, 3pF, ±0.5pF, 50V	1
C101		Ceramic, 5pF, ±0.5pF, 50V	1
C103		Ceramic, 6pF, ±0.5pF, 50V	1
C112		Ceramic, 7pF, ±0.5pF, 50V	1
C102,111		Ceramic, 20pF, ±10%, 50V	2
C114		Ceramic, 22pF, ±5%, 50V N470	

PARTS LIST

Ref. No.	Part No.	Description	Q'ty
ELECTRICAL			
CAPACITORS			
C108		Ceramic, 22pF, ±10%, 50V	1
C319		Ceramic, 25pF, ±10%, 50V	1
C104,315		Ceramic, 30pF, ±10%, 50V	2
C314		Ceramic, 100pF, ±20%, 50V	1
C301		Ceramic, 200pF, ±20%, 50V	1
C110,320		Ceramic, 470pF, ±10%, 50V	2
C701		Ceramic, 470pF, ±20%, 50V	1
C706		Ceramic, 680pF, ±10%, 50V	1
C305,310		Cermaic, 0.022μF, ±20%, 50V	
C318		Ceramic, 0.033μF, ±20%, 50V	1
C106,113 309,708, 709,711, 717,718		Ceramic, 0.01μF, +80-20%,50V	8
C105,107 304		Ceramic, 0.022μF, ±20%, 50V	3
C311		Ceramic, 0.047μF, +80-20%, 50V	1
C115		Mylar, 0.0033μF, ±20%, 50V	1
C712,713 714		Mylar, 0.0068μF, ±20%, 50V	3
C707		Mylar, 0.01μF, ±20%, 50V	1
C302,303, 306,307, 313		Mylar, 0.022μF, ±20%, 50V	5
C316		Mylar, 0.033μF, ±20%, 50V	1
C720		Mylar, 0.047μF, ±20%, 50V	1
C702		Electrolytic, 1μF, 25V	1
C308,317, 703		Electrolytic, 4.7μF, 25V	3

Ref. No.	Part No.	Description	Q'ty
ELECTRICAL			
C719		Electrolytic, 10μF, 35V	1
C704		Electrolytic, 100μF, 6.3V	1
C710		Electrolytic, 220μF, 10V	1
C705,715		Electrolytic, 470μF, 10V	2
C716		Electrolytic, 1000μF, 10V	1
C116		Styrol, 120pF, ±5%, 125V	1
VC,VCT	4-224R-08376	Tuning Capacitor	1
RESISTORS & CAPACITORS All Resistors are Carbon P-type ¼W, ±10%, unless otherwise noted.			
R759		220 ohm	1
R758		470	1
R761		1K	1
R752		2.2K	1
R762		5.6K	1
R756		15K	1
R763		39K	1
R760		47K	1
R757		1M	1
R751,753, 754,755, 764		100K	5
C762		Ceramic, 470pF, ±20%, 50V	1
C755,756, 757,758, 759		Ceramic, 0.01μF, +80-20%, 50V	5
C753		Mylar, 0.0047μF, ±20%, 50V	1
C760,761		Electrolytic, 1μF, 35V	2
C754		Electrolytic, 10μF, 35V	1
C751		Electrolytic, 220μF, 35V	1

IC (MM5387AA) BLOCK DIAGRAM

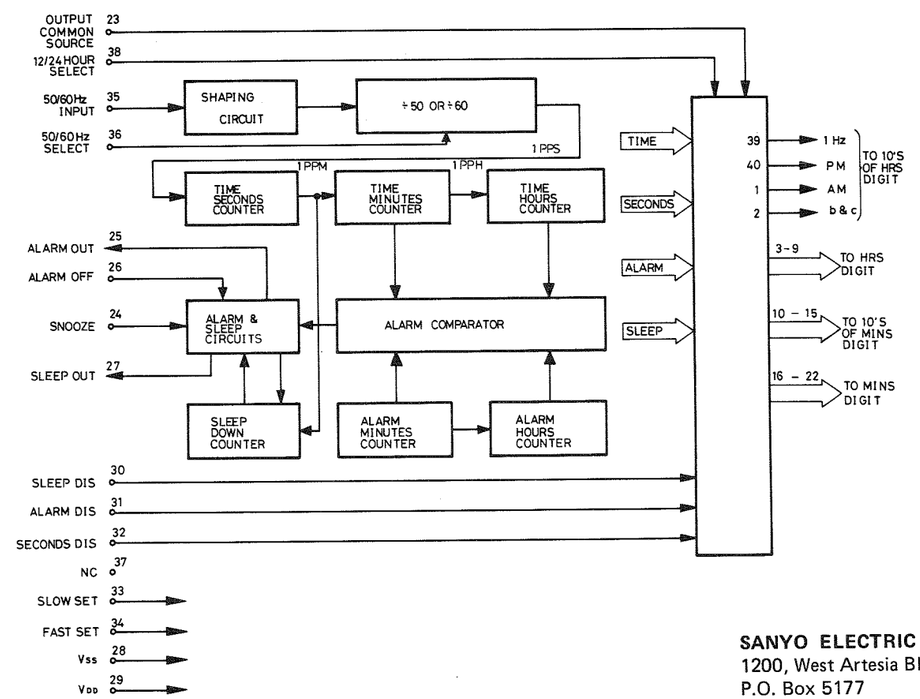

SANYO ELECTRIC INC.
1200, West Artesia Blvd.,
P.O. Box 5177
Compton, California 90220

Aug ./'77/7100 K M Printed in Japan