MITSUBISHI CAR AUDIO

SERVICE MANUAL

CASSETTE TAPE PLAYER WITH AM/FM MPX

MODEL : RX-752EM

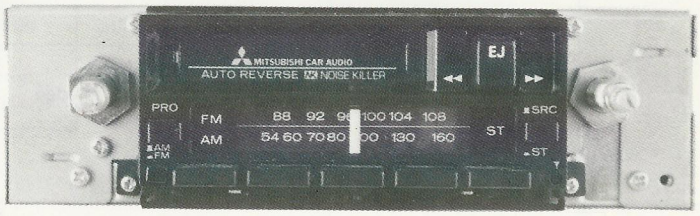

FEATURES

- 5FM or 5AM PUSH button tuning.
- Separate FM/AM dial illumination. (AM: Yellow, FM: Green)
- FM noise killer to help reduce ignition noise.
- Advanced stereo reception control (SRC) for multipath noise as well as ST-MONO automatic change.
- Super DX/LOC circuit for strong-station noise.
- Power antenna lead.
- Auto reverse.
- Locking fast-forward/rewind.
- "Pinch-off" tape protection mechanism.
- Tape program selector switch.
- DIN size chassis.

SPECIFICATIONS

AUDIO

Max. power output per Channel	7W
Power output at 5% THD	5W
Power output at 1% THD	4W
Frequency response (±3dB)	50 ~ 50,000Hz

TAPE

Track	4 Track 2 channel
Wow and Flutter	0.15% (Wrms)
Stereo separation	40dB
S/N Ratio	50dB
Cross talk	50dB
FF time (C-60)	80 sec
REW time (C-60)	80 sec

General

Semiconductors	12 ICs, 9 TRs, 14 DIODEs
Current consumption	0.5A (at 1W)
Power reguirement	14.4V±2.4V
Dimensions	2-1/16 x 7-1/16 x 5-15/16 (inches)
Weight	4.4 (lbs)

ADJUSTMENTS

AM (IF–RF) Alignment

- Power source voltage DC 14.4V.
- The "AM-FM" switch must be in the "AM" position.
- The Volume control must be at minimum position.
- The Tone control must be at high position.

Step	Circuit	Connections		Frequency	Position of tuning dial	Adjust	Remarks
		Input	Output				
1		–	–	–	High edge	T1	CCW
2	IF	Connect SMG output to VC 1 (TP1) thru, 0.01μF and Chassis	Connect SMG input to R6 (TP2) and Chassis	262.5KHz 50dB	High edge	T2 ~ T5	noise 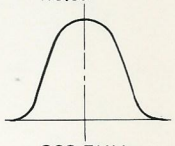 262.5KHz
3				262.5KHz 10 ~ 20dB	High edge	T1	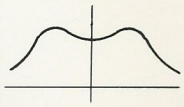
4	RF	Connect SSG output to ANT terminal thru, Dummy Antenna (Fig. 1)	Connect AC volt meter input to Speaker terminal	1640KHz 1000Hz 30% MOD.	High edge	VC3	Tune in
5				1400KHz	1400 KHz	VC1, 2	Maximum reading
6				600KHz	600 KHz	T6	Maximum reading
7				525KHz	Low edge	–	Check of frequency range

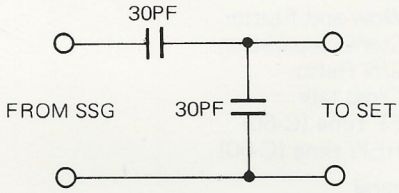

(A) AM DUMMY ANTENNA

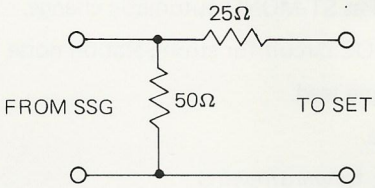

50Ω Close Terminal Type SSG

(B) FM DUMMY ANTENNA

Fig. 1

FM (IF–RF) Alignment

- Power source voltage DC 14.4V.
- The "AM-FM" switch must be in the "fM" position.
- When adjusting an insulating screw driver must be used.
- Adjust VC101, 102 only when the tracking error is over 6dB.

Step	Circuit	Connections		Frequency	Posision of tuning dial	Adjust	Remarks
		Input	Output				
1 2		Connect SMG output to TP101 thru, 56 PF and Chassis	Connect SMG input to TJ151 and Chassis (Fig. 2)	10.7 MHz	Low edge	T102	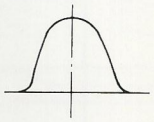 10.7 MHz
3			Connect DC volt meter to TP151 and TP152 (Fig. 3)	No signal	98 MHz	T151	0±80mV
4				98MHz 75KHz Dev.	98MHz	T152	Minimum distortion
5	RF	Connect SSG output to ANT terminal thru, Dummy Antenna (Fig. 1)	Connect AC volt meter input to Speaker terminal	88 MHz	Low edge	VC103	Tune in
6				108 MHz	108 MHz	–	Check of frequency range
7				98 MHz	98 MHz	VC101, 102	Maximum reading

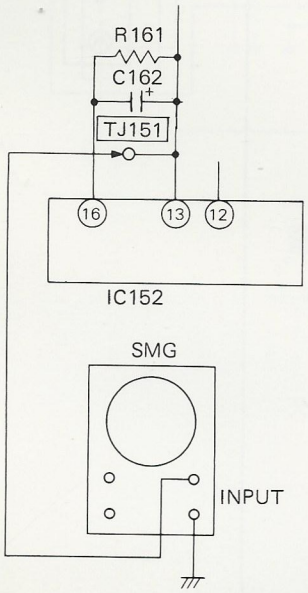

Fig. 2

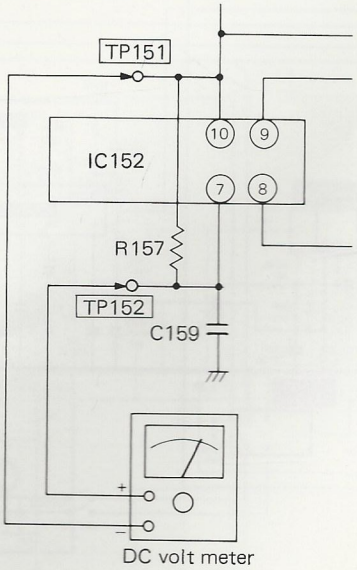

Fig. 3

FM MPX Alignment

Step	Circuit	Connection		Frequency	Point of tuning dial	Adjust	Remarks
		Input	Output				
1	MPX	Connect Counter to TP201 and Chassis	–	–	–	VR202	19±0.1 KHz

SRC Alignment

Step	Circuit	Connection		Frequency	Point of tuning dial	Adjust	Remarks
		Input	Output				
1	SRC	Connect SSG output to Ant terminal thru, Dummy Antenna (Fig. 1)	Connect AC volt meter input to Speaker terminal	–	–	VR203	CCW
2				98MHz 30dB	98MHz	VR201	Best separation
3				98MHz 23dB	98MHz	VR203	Separation 10±2dB

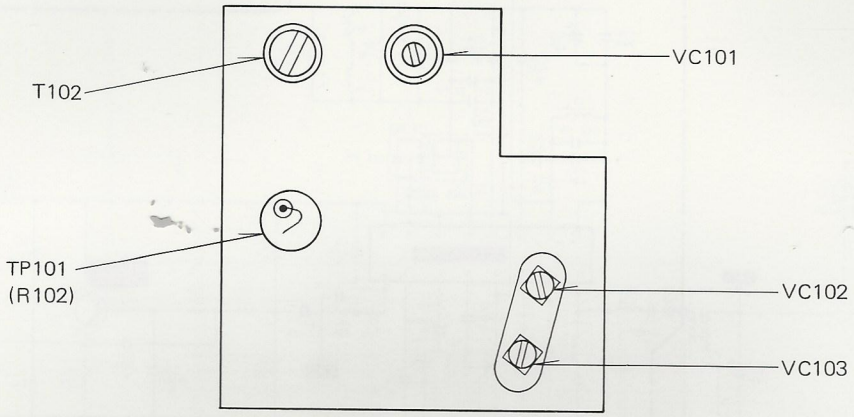

Fig. 4 FM FRONT END

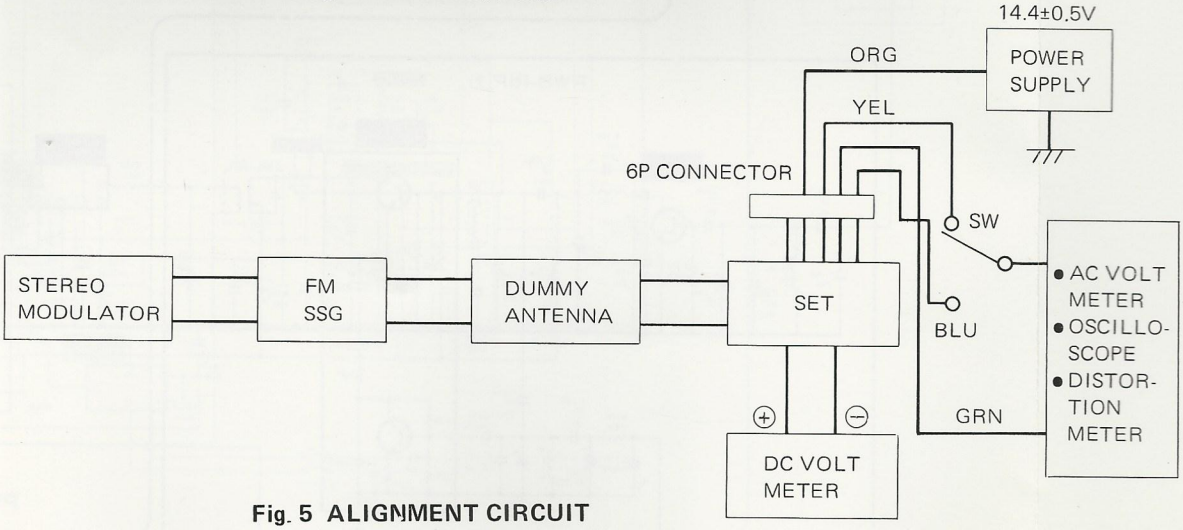

Fig. 5 ALIGNMENT CIRCUIT

VOLTAGE READING

IC151
H8D1266

PIN	VOLTAGE
1	–
2	0
3	11.0
4	1.2
5	0
6	2.0

IC202
SA8084

PIN	VOLTAGE
1	7.7
2	1.7
3	0.3
4	0
5	0
6	0
7	1.8

IC251
H8D1230A-2

PIN	VOLTAGE
1	0
2	3.1
3	2.2
4	0
5	0
6	0
7	13.0
8	13.0
9	4.7

IC203
EHM-112F07

PIN	VOLTAGE
1	2.0
2	4.4
3	0
4	0
5	2.0
6	4.4
7	0
8	0

IC701
AN6250

PIN	VOLTAGE
1	0
2	1.2
3	1.2
4	0
5	0
6	3.6
7	13.0

IC 1
HA1199

PIN	VOLTAGE	PIN	VOLTAGE
1	1.8	10	2.0
2	1.2	11	0
3	0.6	12	11.0
4	0	13	3.4
5	7.2	14	1.2
6	0.6	15	11.0
7	2.0	16	10.0
8	2.2		
9	12.0		

IC152
HA1137W

PIN	VOLTAGE	PIN	VOLTAGE
1	2.0	10	5.5
2	2.0	11	12.5
3	2.0	12	0
4	0	13	0.2
5	–	14	0
6	–	15	0
7	5.5	16	0
8	5.5		
9	5.5		

IC201
LA3370

PIN	VOLTAGE	PIN	VOLTAGE
1	3.0	10	2.2
2	2.6	11	1.6
3	4.2	12	7.5
4	4.2	13	7.6
5	0.2	14	7.3
6	0.2	15	2.6
7	0	16	2.3
8	0.4		
9	2.3		

IC301
EA9081

PIN	VOLTAGE	PIN	VOLTAGE
1	0	10	0.7
2	0.7	11	0
3	0.7		
4	3.0		
5	0		
6	14.0		
7	8.3		
8	3.0		
9	0.7		

IC311
TA7227P

PIN	VOLTAGE	PIN	VOLTAGE
1	13.5	10	7.4
2	7.4	11	13.5
3	14.0	12	14.0
4	1.0		
5	0		
6	0		
7	0		
8	0		
9	1.0		

PWB-RIF (1)

REF. No.	INDEX
I C	
IC1	F-2
IC151	G-2
IC152	H-2
IC201	J-2
IC202	K-5
IC203	K-3
IC251	I-2
TRANSISTOR	
Q1	J-2
Q251	I-2
TRANSFORMER	
T1	E-2
T2	G-1
T3	F-1
T4	E-2
T5	E-1
T6	G-2
T151	H-1
T152	I-1
COIL	
L6	F-2
L7	G-2
L151	H-3

REF. No.	INDEX
CONDENSER	
C1	—
C2	F-2
C3	F-2
C4	F-2
C5	E-2
C6	F-6
C7	E-1
C8	F-1
C9	F-1
C10	F-1
C11	F-2
C12	F-2
C13	F-2
C14	F-2
C15	F-2
C16	F-1
C17	F-1
C18	F-1
C19	G-1
C20	F-2
C21	I-2
C22	J-2
C23	J-2
C24	J-2
C25	K-5
C117	K-4
C118	K-4
C151	G-1
C152	I-2
C153	H-2
C154	G-2

REF. No.	INDEX
C155	G-2
C156	G-2
C157	G-1
C158	G-1
C159	G-1
C160	I-2
C161	H-2
C162	H-2
C201	J-1
C202	J-1
C203	K-1
C204	K-2
C205	J-1
C206	K-2
C207	J-2
C208	K-2
C209	K-2
C210	K-2
C211	K-2
C212	K-4
C251	H-2
C252	J-1
C253	I-1
C254	J-1
C255	I-2
RESISTOR	
R1	E-2
R2	E-1
R3	F-3

REF. No.	INDEX
R4	F-4
R5	I-2
R6	I-2
R7	J-2
R8	I-2
R9	J-2
R10	J-2
R11	J-3
R12	K-6
R107	K-4
R151	G-2
R152	G-2
R153	J-2
R154	I-2
R155	I-2
R156	H-2
R157	H-1
R158	H-1
R159	I-1
R160	H-2
R161	H-2
R162	H-1
R201	J-1
R202	K-2
R203	J-1
R204	—
R205	K-2
R206	J-2
R207	K-2
R208	K-4
R209	K-4
R210	—

REF. N0.	INDEX
R211	H-2
R251	I-2
R252	I-2
R253	J-1
R254	J-1
R255	J-1
R256	I-2
R352	H-2
DIODE	
D1	J-3
D2	J-3
D102	K-4
V R	
VR1	K-1
VR2	K-2
VR3	I-1
V C	
VC1	—
VC2	F-2
VC3	G-2

REF. No.	INDEX

PWB-RIF (2)

REF. No.	INDEX
I C	
IC101	F-5
TRANSISTOR	
Q101	F-5
DIODE	
D101	F-5
TRANSFORMER	
T101	F-5
T102	E-5
COIL	
L104	F-5
CONDENSER	
C101	E-5
C102	F-5
C103	F-5
C104	F-5
C105	F-5

REF. No.	INDEX
C106	F-5
C107	F-5
C108	F-5
C109	F-5
C110	F-5
C111	F-5
C112	F-5
C113	F-5
C114	F-5
C115	G-5
C116	F-5
RESISTOR	
R101	F-5
R102	F-5
R103	F-5
R104	F-5
R105	F-5
R106	G-5
V C	
VC1	F-5
VC102	F-5
VC103	F-5

PWB-AF

REF. No.	INDEX
I C	
IC301	C-7
IC311	A-2
TRANSISTOR	
Q301	F-7
Q401	F-7
DIODE	
D301	C-7
D311	B-2
D401	C-7
CONDENSER	
C301	C-7
C302	D-7
C303	C-7
C306	B-4
C311	F-7
C313	F-7
C321	A-2
C322	A-2
C323	A-2
C324	B-2
C325	A-1

REF. No.	INDEX
C326	B-3
C401	C-7
C402	E-7
C411	F-7
C413	F-7
C421	A-2
C422	B-2
C423	A-3
C424	B-3
C425	A-4
C333	A-4
RESISTOR	
R301	C-7
R302	—
R303	D-7
R304	
R305	—
R306	B-4
R307	F-7
R308	F-7
R311	F-7
R312	F-7
R321	B-2
R322	A-2
R401	C-7

REF. No.	INDEX
R402	—
R403	D-7
R404	
R411	F-7
R412	F-7
R421	B-2
R422	A-3
R331	F-7
S W	
SW301	E-6
V R	
VR	F-7
P C	
PC301	F-7

PWB-LED

REF. No.	INDEX
DIODE	
D705	H-7
D706	I-7

PWB-CP

REF. No.	INDEX
COIL	
L331	E-4
CONDENSER	
C331	E-3
C332	E-4

PARTS LIST

1. Mechanical Parts

1) Deck

Ref. No.	Part No.	Description	Index	Ref. No.	Part No.	Description	Index
1	241M20802	PWB-SW	H-5	41	891K01802	CASSETTE HOLDER	E-5
2	288 L01101	ASSY MOTOR	H-2	42	891K01901	UNIT LEVER CONTROL	D-9
3	435 L01701	SW-LEAF	H-11	43	891 L06003	UNIT REEL REST	J-9
4	435 L01801	SW-LEAF	H-3	44	891 L06004	UNIT REEL REST	K-9
5	439 L00101	SW-SOUELTON	A-2	45	891 L06102	UNIT LEVER IDLER	I-4
6	**460 P03101**	MAGNETIC HEAD	H-10	46	891 L06501	LEVER CRANK	P-7
7	479 L01301	MAGNETIC CLUTCH	A-7	47	891 L06601	PLATE FF-SLIDE	B-11
8	521M02601	BELT-SI	B-9	48	891 L07003	PINCH ROLLER	G-9
9	521M02901	BELT-A	I-5	49	891 L07004	PINCH ROLLER	E-10
10	521M03001	BELT-B	N-8	50	891 L07203	BOTTOM REEL	K-11
11	524 L00902	FLYWHEEL ASSY	N-9	51	891 L07301	PLATESUB	F-4
12	524 L00902	FLYWHEEL ASSY	L-10	52	891 L07501	PLATE-AE	F-2
13	570M33901	SPRING-SW	F-5	53	891 L07602	HOLDER-SW	G-5
14	570M34203	SPRING-IF	D-4	54	891 L07701	PLATE WIRE	E-4
15	570M34303	SPRING-PINCH	F-10	55	891 L07902	LINK RELEASE	G-8
16	570M34304	SPRING-PINCH	F-10	56	891 L08001	LEVER RETAINER	D-10
17	570M34401	SPRING-FG	K-7	57	891 L08101	LEVER BA-H	G-8
18	570M34503	WIRE-EJ	G-2	58	891 L08202	LEVER LINK-FF	J-7
19	570M34601	WIRE STOPPER	B-3	59	891 L08402	BASE HEAD	G-11
20	570M34701	SPRING-HEAD	H-11	60	891 L08503	UNIT PLATE CAM	C-8
21	570M34802	SPRING-FF	I-8	61	891 L08601	LEVER RELEASE	G-9
22	570M35101	SPRING-FF-RE	F-9	62	891 L08801	PULLEY GEAR	A-8
23	570M35201	SPRING-SL-B	D-10	63	891 L08901	PULLEY GEAR	I-5
24	570M35502	SPRING-CH	B-3	64	891 L09001	BOTTOM FLYWHEEL	N-10
25	570M35601	SPRING-SCH	A-3	65	891 L09202	SIDE PLATE	B-5
26	570M35703	SPRING-AE	E-1	66	891 L09501	LINK-CR	P-7
27	590 L76202	CAM PLATE-FF	O-9	67	943 L53501	ASSY BRIDGE	O-2
28	591M58301	PLATE-STM	I-7	-A	570M34101	SPRING BRIDGE	L-3
29	591M58302	PLATE-STM	I-8	-B	590 L80101	BRIDGE-L	L-1
30	591M58601	STOPPER LINK	P-8	-C	590 L80102	BRIDGE-R	N-2
31	591M58701	STOPPER-CH	A-3	-D	891 L09301	BRACKET BRIDGE	K-2
32	591M58901	PLATE-FG	K-8	68	640M00201	WASHER-P (2.1ϕ)	
33	591M58902	PLATE-FG	K-8	69	640M00203	WASHER-P (2.1ϕ)	
34	591M59401	SPACER MOTOR	G-2	70	640M00206	WASHER-P (2.1ϕ)	
35	591M61601	PLATE SIDE	G-3	71	640M03003	WASHER-P (2.1ϕ)	
36	591M66901	LEVER STOPPER	C-3	72	640M04201	BOTTOM CAR-FW	L-10, N-10
37	641 L02901	SLIDER PAC	D-6	73	640M04301	CUT WASHER-P (1.6ϕ)	
38	641 L03001	CAM GEAR	B-9				
39	641M19801	CRANK GEAR	C-9				
40	891K01704	UNIT MAIN BASE	O-4				

EXPLOPED VIEW

1. Mechanical

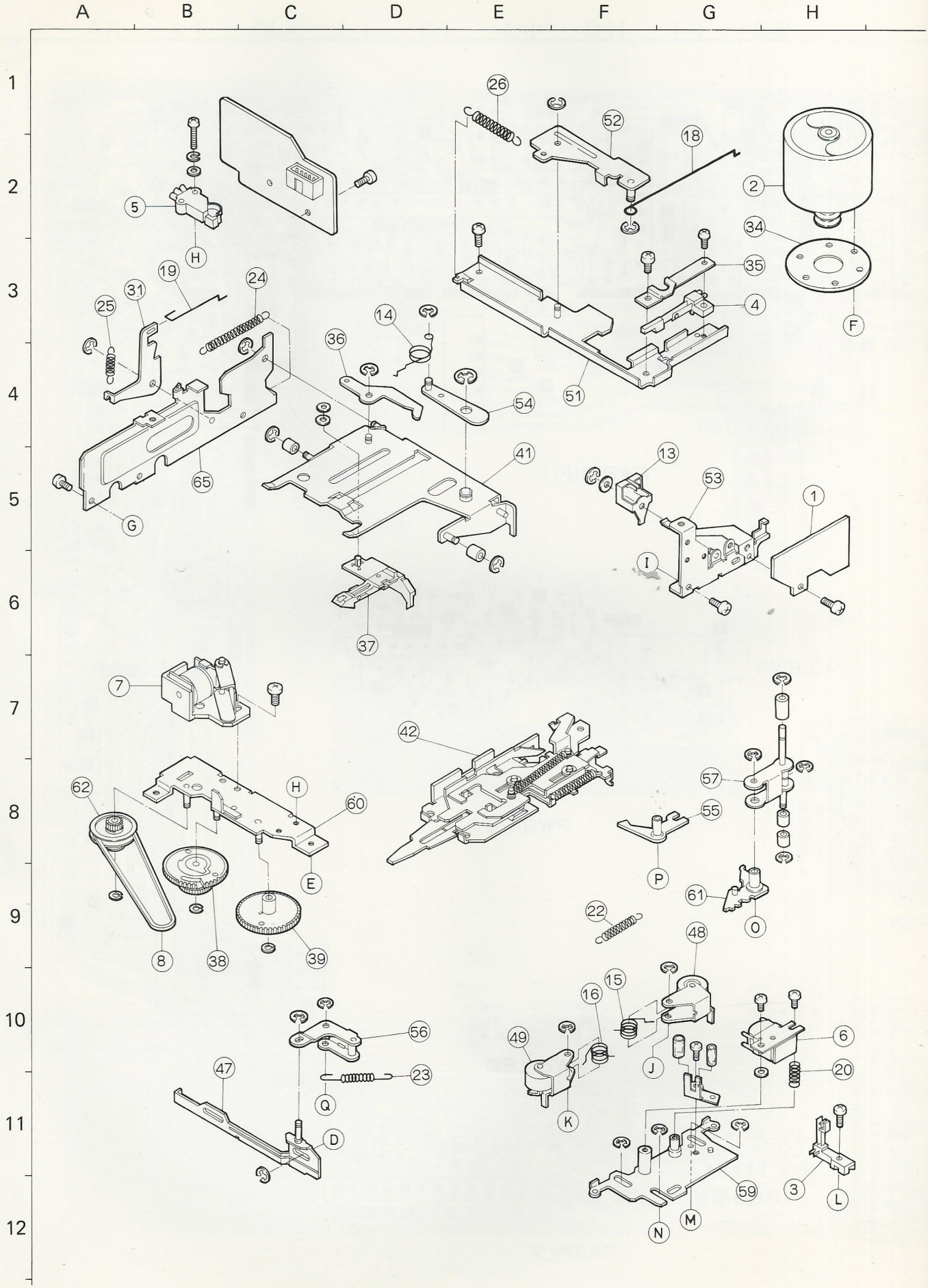

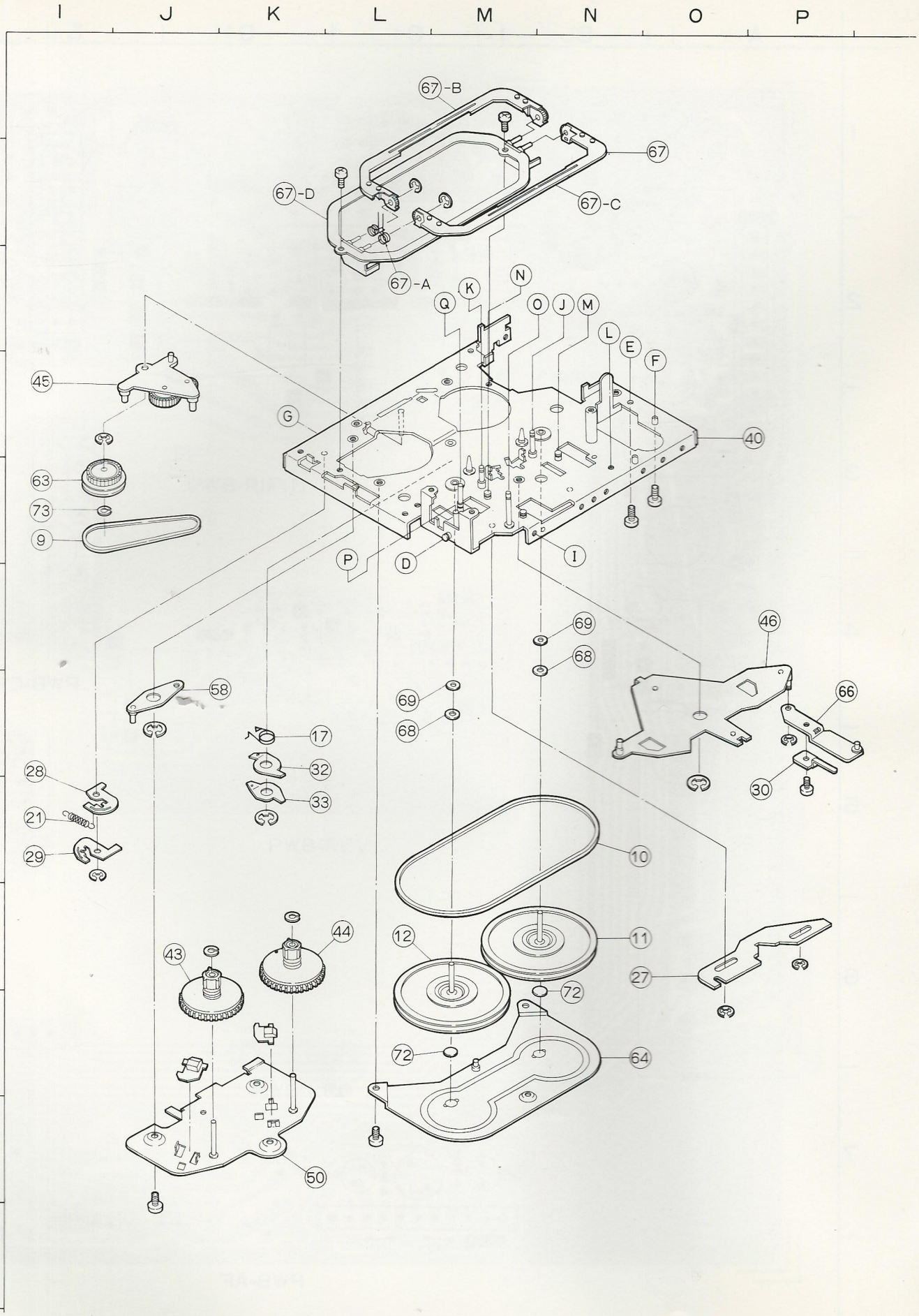
I
J
K
L
M
N
O
P
1
2
3
4
5
6
7
8
9
10
11
12
67-B
67
67-D
67-C
67-A
N
K
Q
O
J
M
L
E
F
45
G
40
63
73
9
P
D
I
69
68
46
58
69
68
66
17
32
33
28
21
29
30
10
44
12
11
43
27
72
72
64
50

2) Chassis

Ref. No.	Part No.	Description	Index
1	590 K22302	BOTTOM COVER	D - 8
2	590 K22102	UPPER COVER	C - 2
3	704M36202	KNOB-EJ	A - 5
4	642M10001	INSULATOR PLATE	B - 2
5	590 K24401	CHASSIS DECK	D - 5
6	590 L81001	BACK COVER	F - 4
7	591M67501	LEVER-SW-PRO	B - 3
8	591M63801	PLATE-P	C - 3
9	704M21701	BUTTOM-PRO	A - 3
10			
11	704M38201	BOTTOM-SDK	C - 5
12	761M04801	JOINT	F - 6
13	590 K24302	TUNER CHASSIS	E - 6
14	641M19502	TRIMMER SHAFT	D - 6
15	449 L03602	ANTENNA COCKET	E - 5
16	590D95401	CABLE CLAMPER	F - 6
17	591M67401	LEVER-SW ST	C - 6
18	591M67301	TRIMMER HOLDER	E - 7
19			
20	838M00201	LEAD-CLAMPER	B - 2

Ref. No.	Part No.	Description	Index
21	590 L81801	SHIELD COVER	E - 6
22	129 L11501	VR SHAFT TUNE	F - 6
23	242 L11208	LEAD CONNECTOR-3P	F - 6
24	295 K07301	TUNER	D - 5
25	707 L07205	DIAL	A - 6
26	761 L01202	LAMP COVER	B - 6
27	591M67201	PWB HOLDER	B - 6
28	241 K58902	FPC-LAMP	D - 5
29	691M67101	HEAT SINK	E - 3
30	591M67001	CP HOLDER	D - 3
31	590 L80901	FRONT PLATE	B - 4
32	241M22101	PWB-LED	C - 4
33	641M20401	LED SPACER	C - 4
34	943 L54508	SUB ASSY NOSE	B - 5
34-A	761M04304	SHUTTER	A - 3
34-B	531M07203	SHUTTER SHAFT	A - 3
34-C	570M36301	SHUTTER SPRING	A - 3
35	702 L06002	FACE PLATE	A - 5
36	704 L11501	KNOB-A	A - 6
37	704 L11601	KNOB-B	A - 6
38	704 L06205	BUTTON TUNER (FM)	C - 6
38	704 L06204	BUTTON TUNER (MW)	C - 6
39	704M38101	BUTTON-SRC	C - 6

EXPLODED VIEW

2. Cabinet

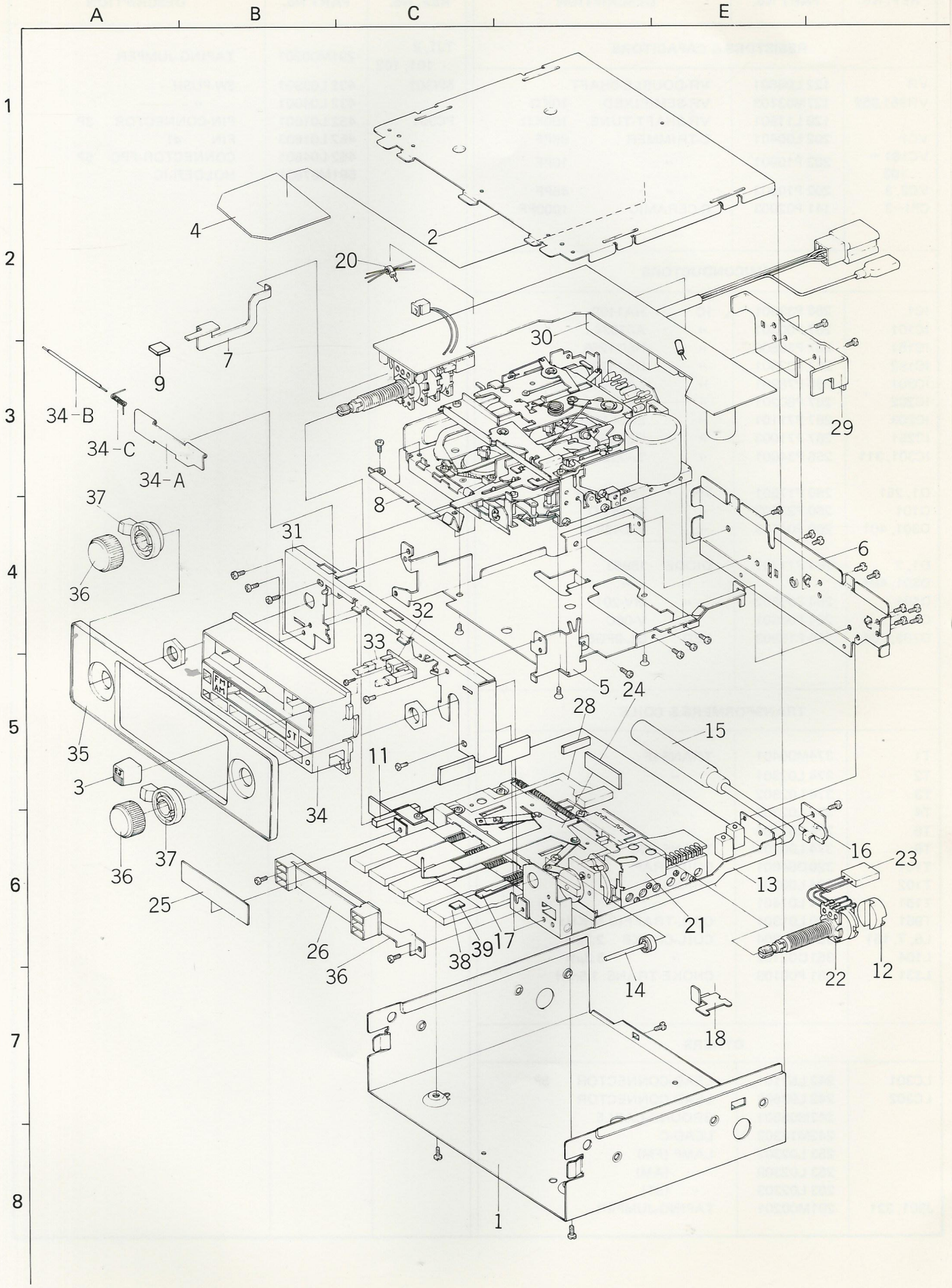

2. Electrical parts

REF. No.	PART No.	DESCRIPTION
RESISTORS & CAPACITORS		
VR	122 L08501	VR-DOUBLE-SHAFT
VR951,952	127M03103	VR-SEMIFIXED 10KΩ
	129 L11501	VR-SHAFT-TUNE 100KΩ
VC1	202 L00401	C-TRIMMER 65PF
VC101 ~ 103	202 P10901	" 10PF
VC2, 3	202 P10903	" 45PF
CP1~3	141 P02003	C-CERAMIC 1000PF
SEMICONDUCTORS		
IC1	266 P33301	IC HA1199
IC101	267 P00301	" A07034
IC151	267 P30806	" H8D1266
IC152	267 P32801	" HA1137W
IC201	266 P78901	" LA3370
IC202	267 P80201	" SA8084
IC203	267 P71101	" EHM-112F07
IC251	267 P71003	" H8D1230B
IC301, 311	266 P34001	" TA7227
Q1, 251	260 P17501	TR 2SC711-EF
Q101	260 P23702	" 2SK61-O
Q301, 401	260 P04503	" 2SC458-C
D1, 2	264 P11701	DIODE 1S953
D301, 401	"	" "
D101	264 P05502	" MV-201
D311	264 P08801	" V-06C
D705, 706	264 P19803	LED GL-9PG6
TRANSFORMERS & COILS		
T1	374M00401	TRANS-IF
T2	374 L02301	"
T3	374 L02302	"
T4	374 L02303	"
T5	374 L02304	"
T6	374 L00201	TRANS-OSC
T101	320D04601	COIL-TRAP
T102	374 L00201	TRANS-IF
T151	374 L01401	"
T951	409 L01301	COIL-TRAFFIC 57KHz
L6, 7, 151	351M00604	COIL-CHOKE 2.7μH
L104	351D02102	" 3.3μH
L331	351 P00109	CHOKE-TRANS 1.5mH
OTHERS		
LC301	242 L57101	LEAD-CONNECTOR 5P
LC302	242 L03506	LEAD-CONNECTOR
	242M05501	GROUND-CABLE
	242M14302	LEAD-C
	253 L02302	LAMP (FM)
	253 L02309	" (AM)
	253 L02303	" (ST)
J301, 321	291M00201	TAPING-JUMPER
TJ1, 2 101, 102	291M00201	TAPING-JUMPER
SW301	432 L03901	SW-PUSH
	432 L04001	"
PC301	452 L01601	PIN-CONNECTOR 3P
	452 L01603	PIN ϕ1
	452 L04801	CONNECTOR-FPC 5P
	591M67801	HOLDER-IC

SHEMATIC-DIAGRAM RX-752EM

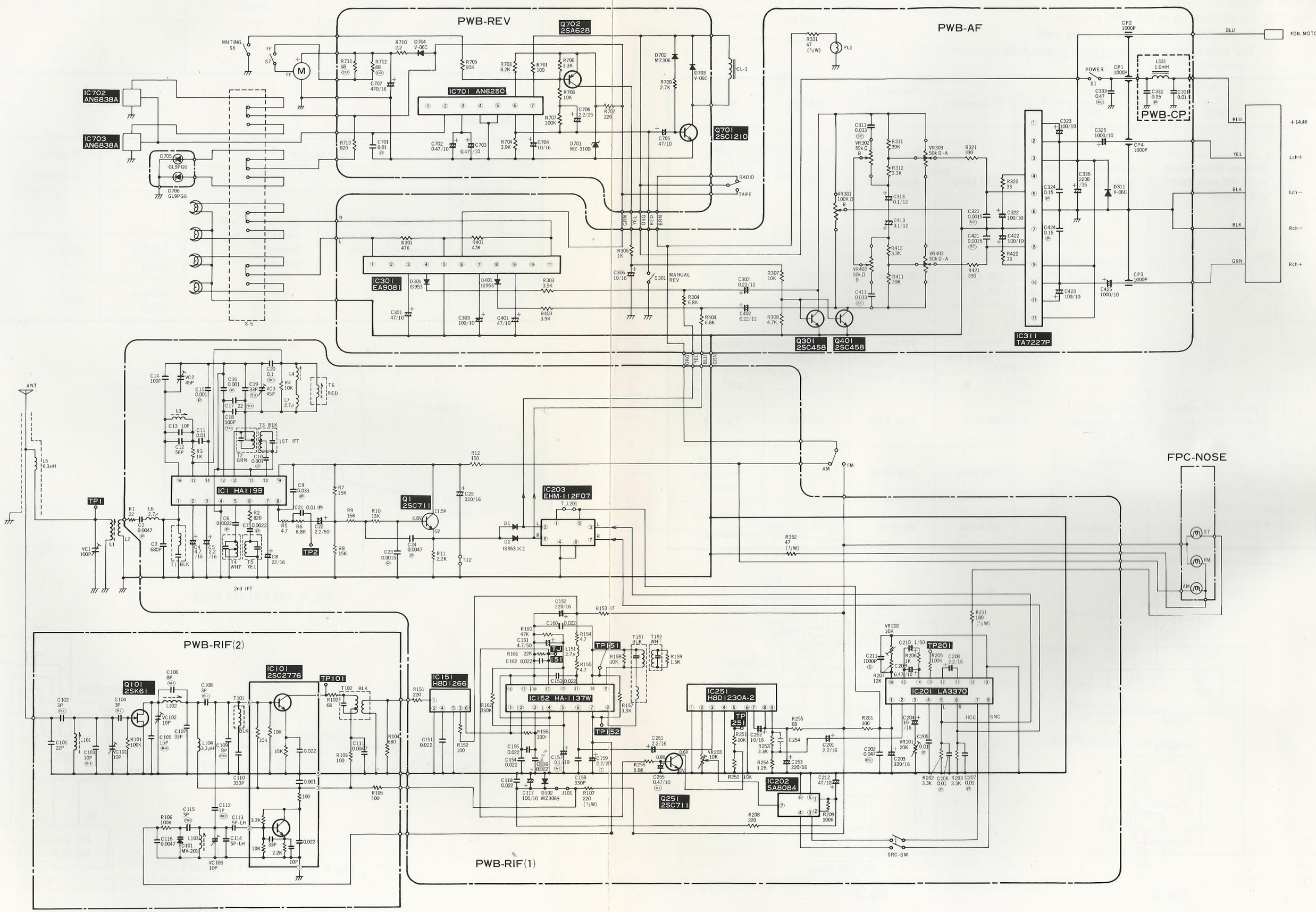

PRINTED CIRCUIT BOARD(Printed Side)
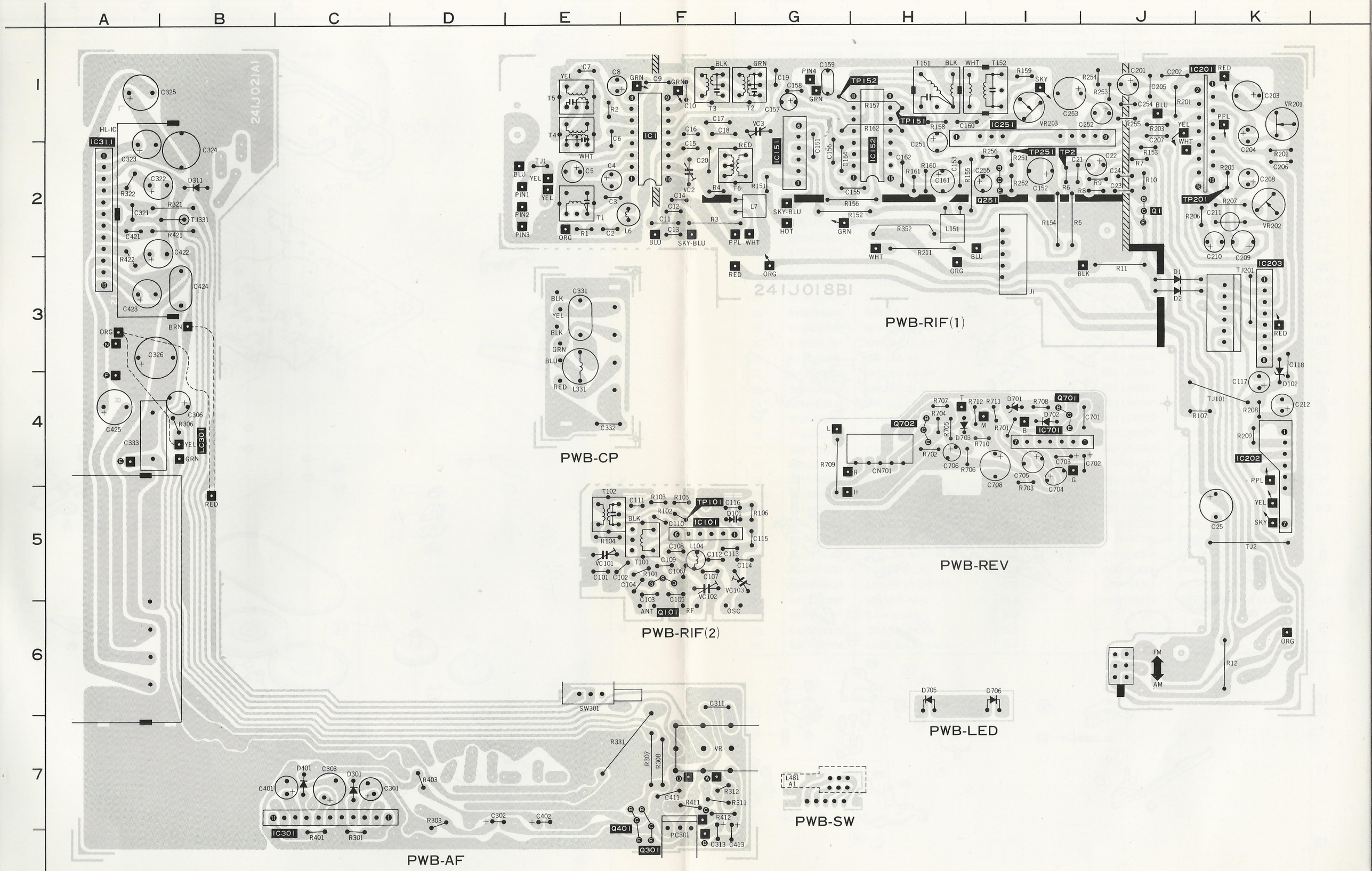
MODEL:RX-752EM