TOSHIBA

AM/FM STEREO SYNTHESIZER RECEIVER

RP-2057

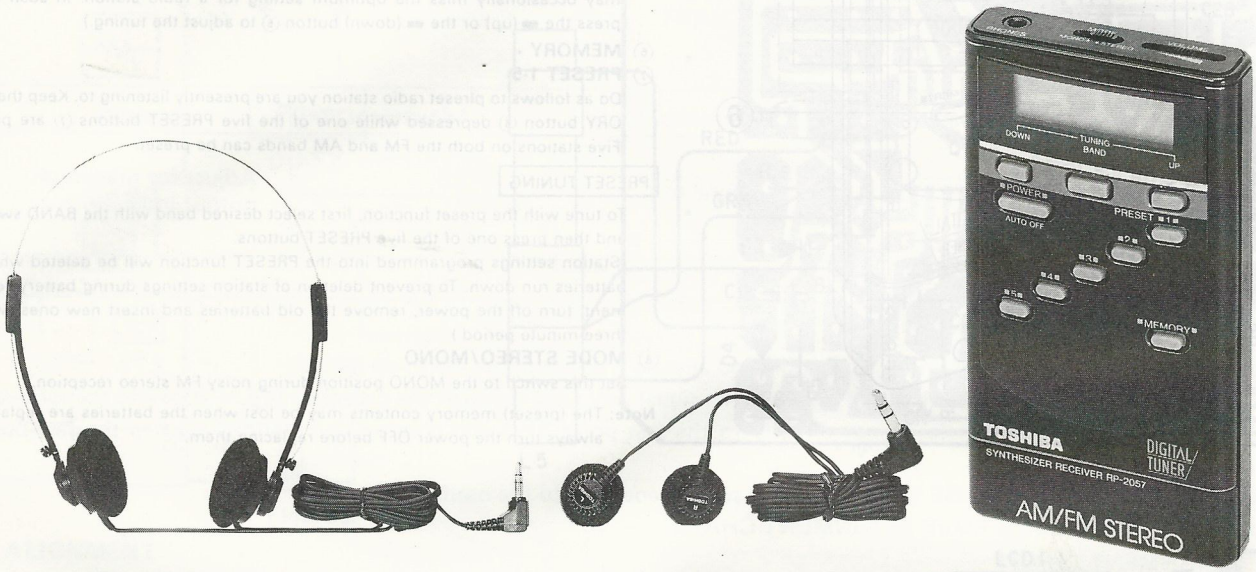

For U.S.A./Canada

For Europe/Australia

SPECIFICATIONS

Frequency Range:	FM 87.5 – 107.9 MHz AM 530 – 1610 kHz (U.S.A./Canada) AM 531 – 1602 kHz (Europe/Australia)
Power Supply:	DC 3V, 2 IEC R03 ("AAA", UM-4) batteries
Power Output:	30 mW + 30 mW (Max.)
Jack:	Mini Jack for stereo headphones (16 – 32 ohms)
Dimensions:	61(W) x 111(H) x 22(D) mm
Weight:	90 g (including batteries)
Accessories:	Stereo headphones, Belt clip

Specifications are subject to change without notice.

K-TA, TC, TE, AY

PRINTED IN JAPAN 22905745 Aug, 1987 (S)

OPERATING CONTROLS

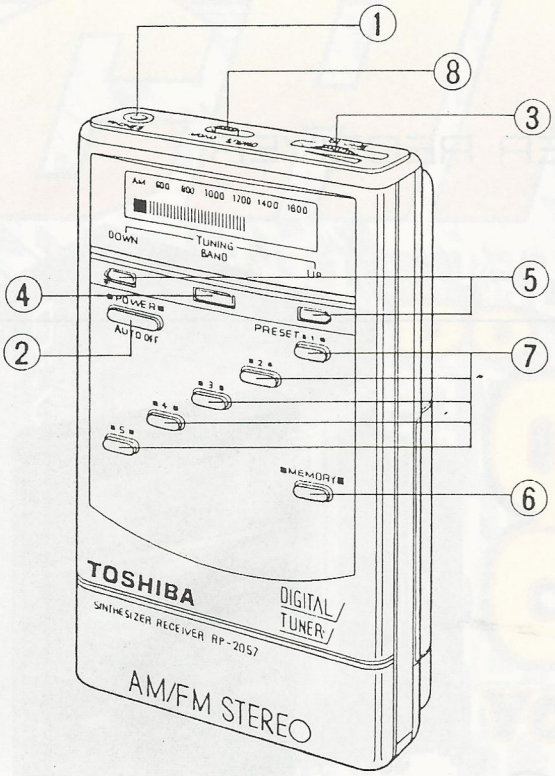

① **PHONES**
Connect your stereo headphones to this jack. The headphone cord now serves as the FM antenna and so should be extended for use.

② **POWER/AUTO OFF**
Use this button to turn the power on or off. The built-in IC timer will automatically turn off the power one hour after it is turned on. (This function prevents the batteries from running down when foregetting to switch off the power.)

③ **VOLUME**

④ **BAND**
Use this button to select FM or AM bands.

⑤ **TUNE**
The receiving frequency will increase when the ▬ (up) button is pressed and decrease when the ▬ (down) button is pressed. Automatic tuning starts when the buttons are pressed longer than 0.5 seconds then released. (●Automatic tuning is not possible when the buttons are kept depressed. ●A continuous beeping sound announces when you have reached the end of the frequency scale. Press the ▬ (up) or the ▬ (down) button to stop the sound. ●The automatic tuning function may occasionally miss the optimum setting for a radio station. In such a case, press the ▬ (up) or the ▬ (down) button ⑤ to adjust the tuning.)

⑥ **MEMORY**

⑦ **PRESET 1-5**
Do as follows to plreset radio station you are presently listening to. Keep the MEMORY button ⑥ depressed while one of the five PRESET buttons ⑦ are pressed. Five stations on both the FM and AM bands can be preset.

PRESET TUNING

To tune with the preset function, first select desired band with the BAND switch ④ and then press one of the five PRESET buttons.
(Station settings programmed into the PRESET function will be deleted when the batteries run down. To prevent deletion of station settings during battery replacement, turn off the power, remove the old batteries and insert new ones within a three-minute period.)

⑧ **MODE STEREO/MONO**
Set this switch to the MONO position during noisy FM stereo reception.

Note: The (preset) memory contents may be lost when the batteries are replaced, so always turn the power OFF before replacing them.

DISASSEMBLY INSTRUCTIONS

CABINET REMOVAL

1. Remove the Battery cover.
2. Remove a screw Ⓐ , and rear cabinet will be removed.

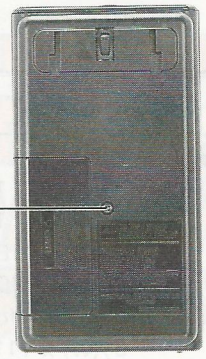

Screw, Tapping 2ϕ x 8mm

Figure 1

ADJUSTMENTS

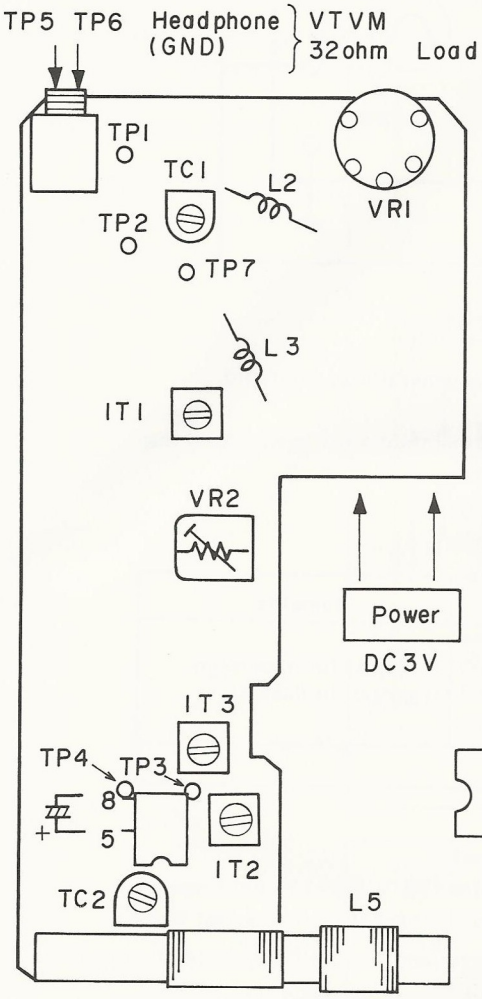

Figure 2

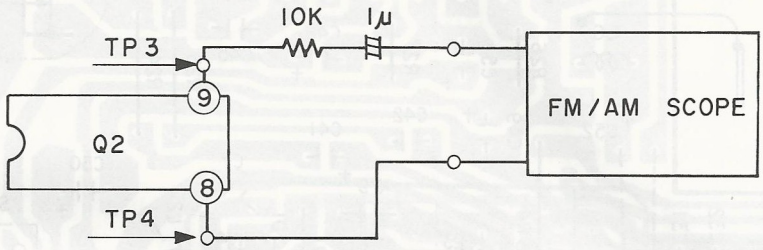

Figure 3

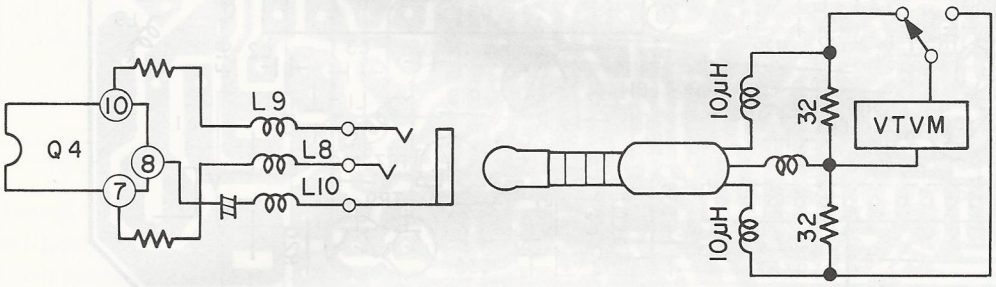

Figure 4

AM-IF ALIGNMENT

1. Turn on both sweep generator and oscilloscope allow a fifteen-minute warm-up period.
2. Connect the RF SWEEP SIGNAL OUTPUT from the signal generator the loop antenna to the receiver.
3. Connect the oscilloscope vertical input directly to the test point TP-3 and connect the shielded lead to the test point Ground.
4. Connect the SWEEP VOLTAGE OUTPUT of sweep generator to the oscilloscope.
5. Proceed as outlined in the AM-IF ALIGNMENT CHART.

AM-IF ALIGNMENT CHART

Step	Signal Coupling	Equip.	Tuning	Connection	Adjust. point	Pattern
1	Connect sweep generator output to a loop antenna.	Sweep generator of 450 kHz center freq. with 450 kHz marker.	Highest Frequency	Set scope for connecting output signal from TP-3 to vertical axis of scope "V" and sweep generator output to horizontal axis "H". While adjusting, connect the electrolytic condenser of more then 10 μF between the pin 5 (positive pole) and the pin 8 (negative pole) of Q2	IT2	Adjust coil IT2 until the best single peak is obtained.

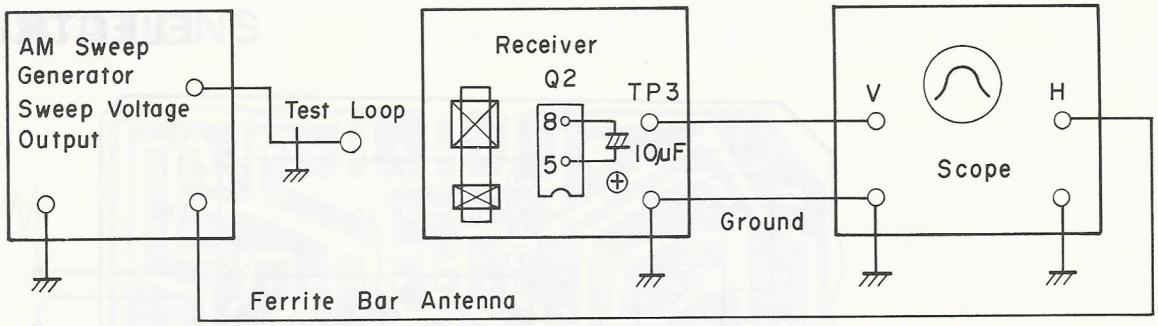

Figure 5

AM-RF ALIGNMENT

1. Turn on the signal generator and the VTVM, and a fifteen-minute warm-up period.
2. Using the test loop across the output of the signal generator, inductively connect the signal generator to the radio.
3. Connect the VTVM across dummy load as in Figure 4.
4. Adjust the signal generator frequency as indicated in AM-RF ALIGNMENT CHART, and maintain a sufficient signal output level to provide a measurable indication.
5. Proceed as outlined in the AM-RF ALIGNMENT CHART.

AM-RF ALIGNMENT CHART

Step	Signal Generator	Frequency Setting	Adjustment	Remarks
1	600 kHz (603) Europe/Australia	Tune to signal	Ant. Coil L5	Adjust for maximum output indicatin.
2	1400 kHz (1404) Europe/Australia		Ant. Trim. TC2	
3	Repeat steps 1 and 2 as required.			

FM-IF ALIGNMENT

1. Turn on both sweep generator and oscilloscope, and allow a fifteen-minute warm-up period.
2. Connect the RF SWEEP SIGNAL OUTPUT from the signal generator through the capacitor (10 ∿ 20pF) to the receiver.
3. Connect the oscilloscope vertical input directly to the test point TP-3 and connect the shielded load to the test point Ground.
4. Connect the SWEEP VOLTAGE OUTPUT of the sweep generator to the oscilloscope.
5. Proceed as outlined in the FM-IF ALIGNMENT CHART.

FM-IF ALIGNMENT CHART

Step	Signal Coupling	Equip.	Tuning	Connection	Adjust. point	Pattern
1	Connect RF OUTPUT terminals of sweep generator to TP-7 inserting 10PF ∿ 20PF condenser in between. Connect TP-2 to the ground.	Sweep generator of 10.7 MHz center freq. with 10.7 MHz marker.	Highest Frequency.	Set scope for connecting output signal from TP-3 to vertical axis of scope "V" and sweep generator output to horizontal axis "H".	IT1 IT3	Turn the coil IT3 fully counterclockwise to obtain a single peak. Adjust coil IT1 in order until the best single peak is obtained. Finally turn the coil IT3 to obtain S Curve. Fig. 6

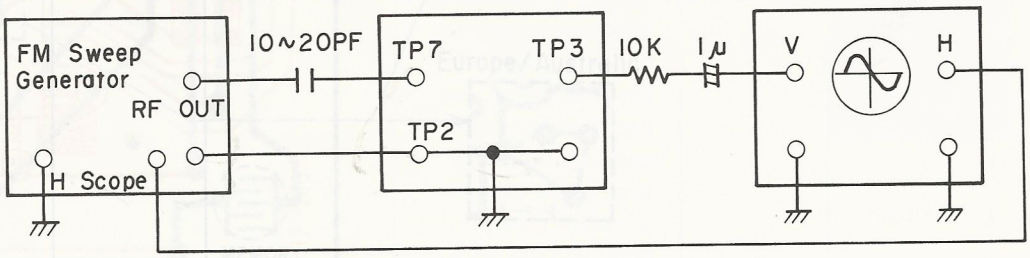

Figure 6

ELECTRICAL PARTS LOCATIONS

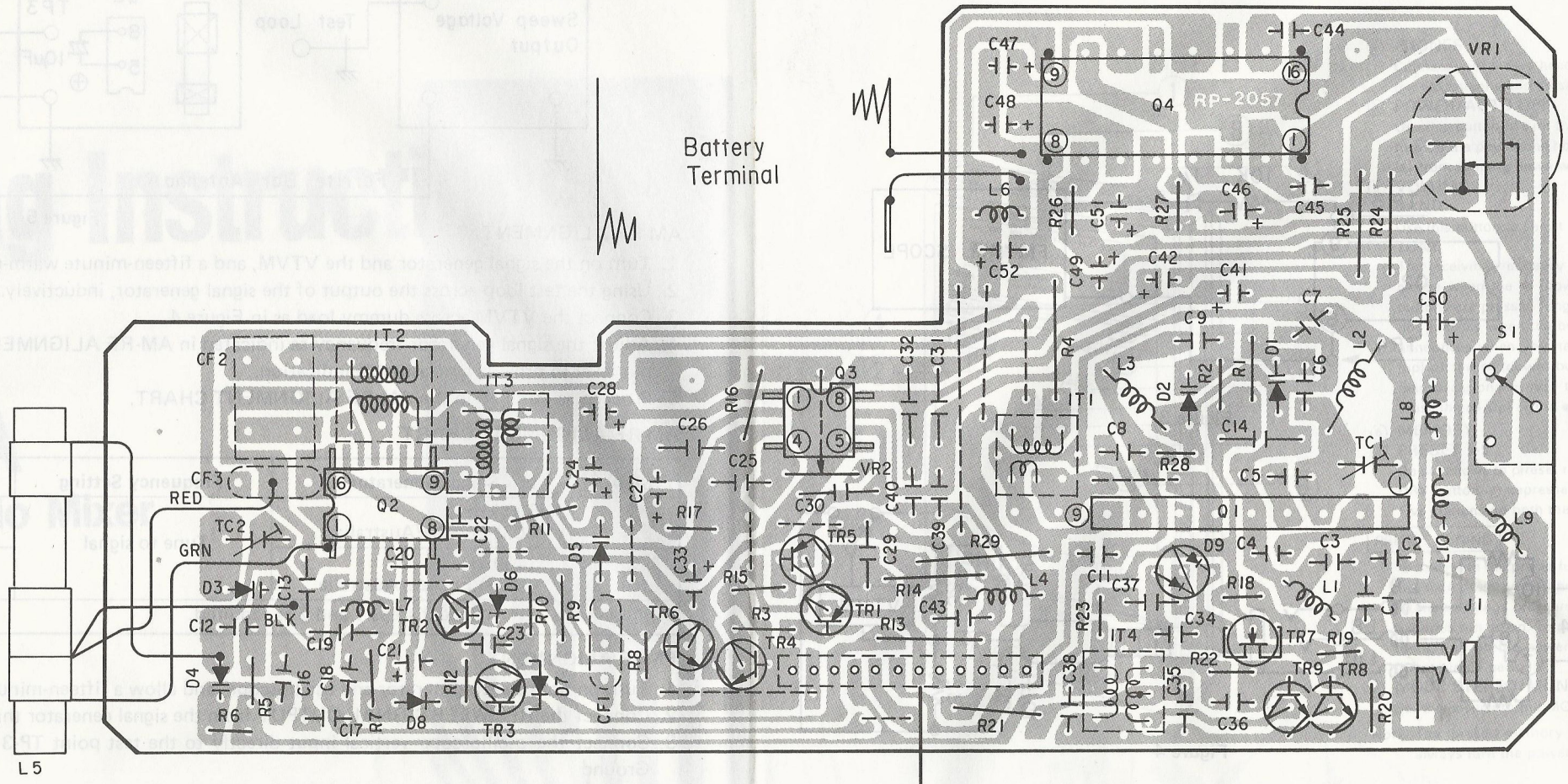

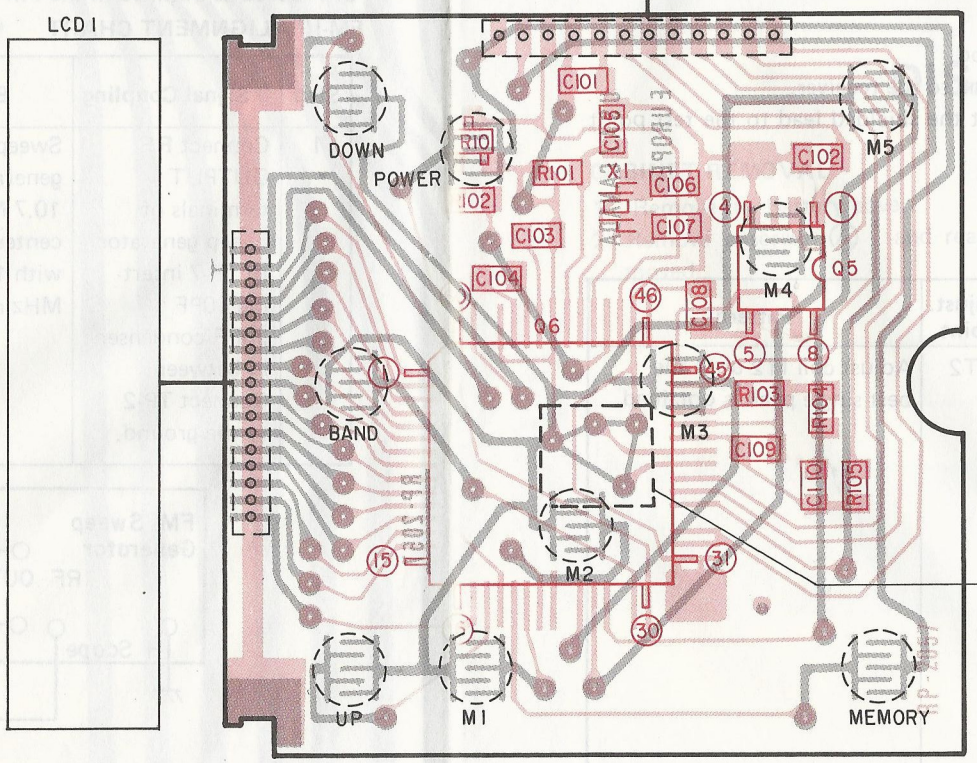

Note: Patterns have been cut as shown below depending upon distinations.

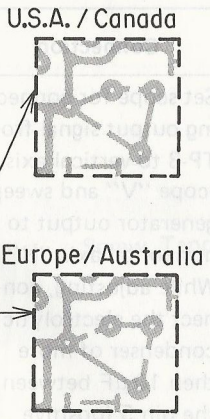

SCHEMATIC DIAGRAM

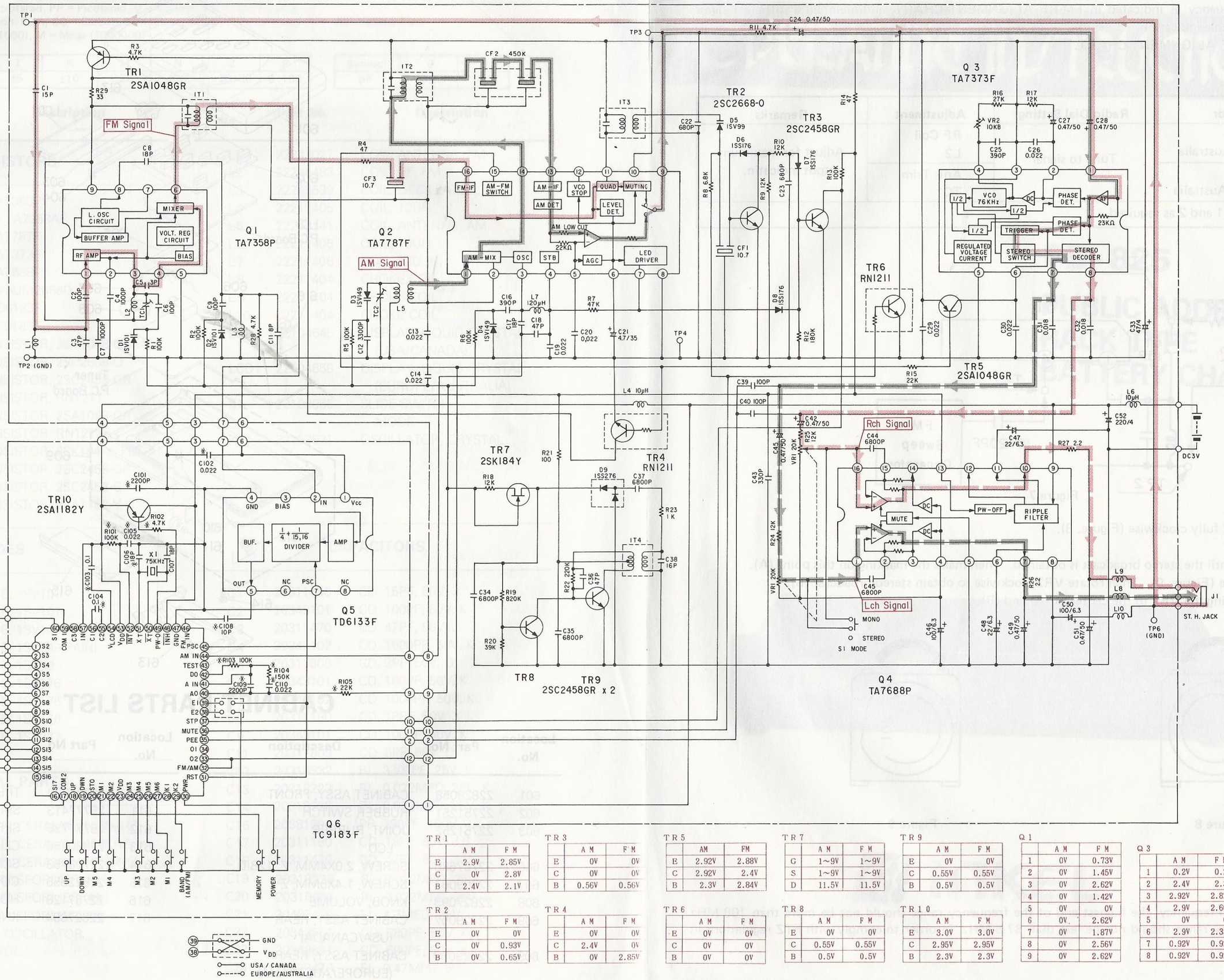

Q 2

	AM	FM
1	1.1V	1.1V
2	1.1V	1.1V
3	1.55V	1.55V
4	1.55V	1.55V
5	0.35V	0.34V
6	0.4V	0.95V
7	0.95V	0V
8	0V	0V
9	1.1V	1.1V
10	2.92V	2.82V
11	2.92V	2.82V
12	2.92V	2.82V
13	1.1V	1.1V
14	2.92V	2.82V
15	0V	2.87V
16	1.1V	1.1V

Q 5

	AM	FM
1	0V	2.75V
2	0V	2.0V
3	0V	2.0V
4	0V	0V
5	0V	1.5V
6	0V	0V
7	0V	1.6V
8	0V	0V

Q 6

	AM	FM
1~17	1.45V	1.45V
18~22	0V	0V
23	3.0V	3.0V
24~30	0V	0V
31	0V	0V
32, 33	0V	2.85V
34~37	0V	0V
38	0V	0V
39	3.0V	3.0V
40	1~9V	1~9V
41	0.65V	0.65V
42	0.65V	0.65V
43	0V	0V
44	1.5V	0V
45	0V	1.64V
46	0V	1.5V
47	0V	0V
48	2.9V	2.9V
49	0V	0V
50	1.45V	1.45V
51	1.0V	1.0V
52	2.9V	2.9V
53	3.0V	3.0V
54	0V	0V
55	0.79V	0.79V
56	2.2V	2.2V
57	2.99V	2.99V
58	0.5V	0.5V
59	1.45V	1.45V
60	1.45V	1.45V

Q 4

	AM/FM
1	1.45V
2	1.45V
3	1.45V
4	1.45V
5	0V
6	2.3V
7	1.55V
8	0V
9	3.0V
10	1.5V
11	2.3V
12	2.4V
13	2.96V
14	1.45V
15	1.45V
16	1.45V

TR 1

	AM	FM
E	2.9V	2.85V
C	0V	2.8V
B	2.4V	2.1V

TR 2

	AM	FM
E	0V	0V
C	0V	0.93V
B	0V	0.65V

TR 3

	AM	FM
E	0V	0V
C	0V	0V
B	0.56V	0.56V

TR 4

	AM	FM
E	0V	0V
C	2.4V	0V
B	0V	2.85V

TR 5

	AM	FM
E	2.92V	2.88V
C	2.92V	2.4V
B	2.3V	2.84V

TR 6

	AM	FM
E	0V	0V
C	0V	0V
B	0V	0V

TR 7

	AM	FM
G	1~9V	1~9V
S	1~9V	1~9V
D	11.5V	11.5V

TR 8

	AM	FM
E	0V	0V
C	0.55V	0.55V
B	0.5V	0.5V

TR 9

	AM	FM
E	0V	0V
C	0.55V	0.55V
B	0.5V	0.5V

TR 10

	AM	FM
E	3.0V	3.0V
C	2.95V	2.95V
B	2.3V	2.3V

Q 1

	AM	FM
1	0V	0.73V
2	0V	1.45V
3	0V	2.62V
4	0V	1.42V
5	0V	0V
6	0V	2.62V
7	0V	1.87V
8	0V	2.56V
9	0V	2.62V

Q 3

	AM	FM
1	0.2V	0.2V
2	2.4V	2.3V
3	2.92V	2.82V
4	2.9V	2.66V
5	0V	0V
6	2.9V	2.35V
7	0.92V	0.92V
8	0.92V	0.92V

FM-RF ALIGNMENT

1. Turn on the signal generator and allow a fifteen-minute warm-up period.
2. Connect the signal generator output through a 75 ohm dummy antenna across FM ANT.
3. Adjust the signal generator frequency as indicated in FM-RF ALIGNMENT CHART, and maintain a sufficient signal output level to provide a measurable indication.
4. Proceed as outlined in the FM-RF ALIGNMENT CHART.

FM-ALIGNMENT CHART

Step	Signal Generator	Radio Dial Setting	Adjustment	Remarks
1	90.1 MHz (90 MHz) Europe/Australia	Tune to signal	RF Coil L2	Adjust for maximum output indicatin.
2	106.1 MHz (106 MHz) Europe/Australia		Ant. Trim. TC1	
3	Repeat steps 1 and 2 as required.			

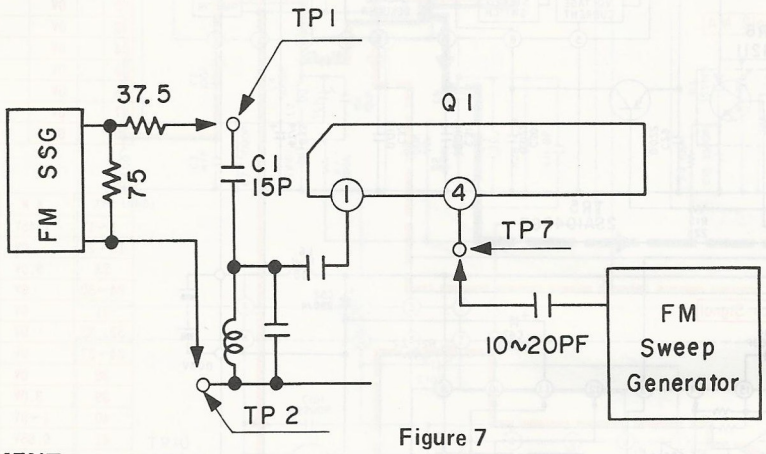

Figure 7

FREE RUN ADJUSTMENT

1. Turn the semi-fixed resistor VR2 fully clockwise (Figure. 8).
2. Receive FM stereo broadcast.
3. Rotate VR2 counterclockwise until the stereo broadcast is obtained. Then make the marking on this point (A).
4. Turn VR2 fully counterclockwise (Figure. 9). Then rotate VR2 clockwise to obtain stereo broadcast (B).
5. Adjustment is completed by setting the VR2 to the center of (A) and (B).

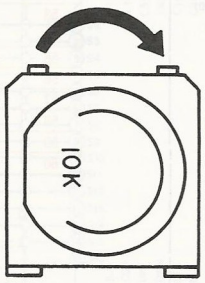

Figure 8

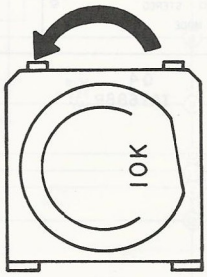

Figure 9

CAUTION:

When realigning the FM Receiving Frequency, the highest end of the frequency range should not be more than 108 MHz and the lowest end of the frequency range should not be less than 87.5 MHz, in order to comply with FTZ regulations in West Germany.

CABINET EXPLODED VIEW

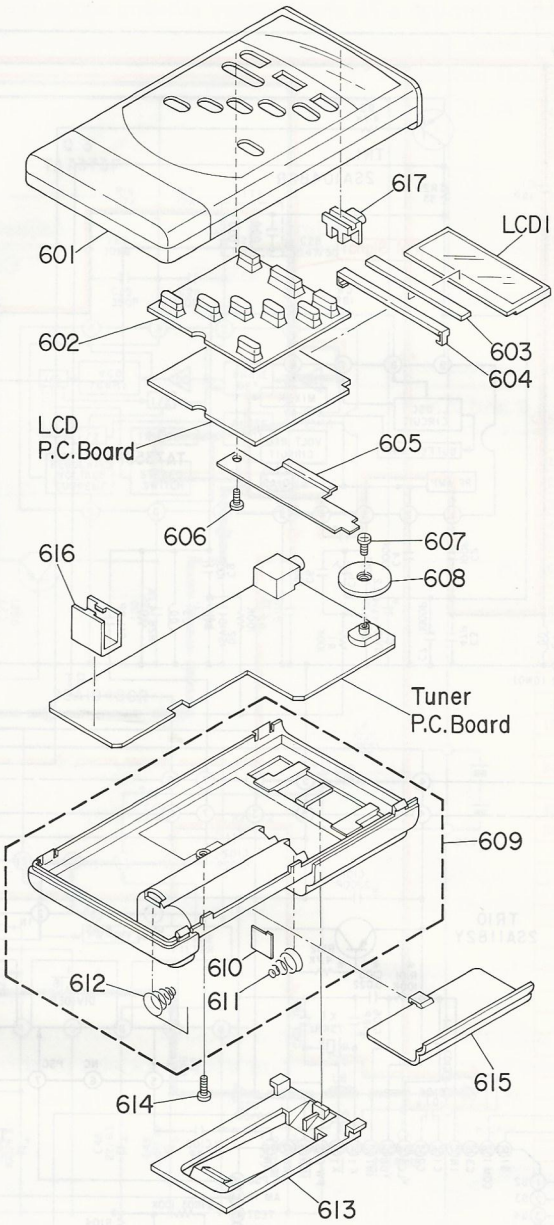

CABINET PARTS LIST

Location No.	Part No.	Description
601	22829058	CABINET ASSY, FRONT
602	22751251	RUBBER SWITCH
603	22751252	JOINT, RUBBER LCD
606	22707686	SCREW, 2.0X4MM, Z, 12BID
607	22709067	SCREW, 1.4X5MM, Z
608	22827093	KNOB, VOLUME
609	22829057	CABINET ASSY, REAR (USA/CANADA)
609	22829059	CABINET ASSY, REAR (EUROPE/AUSTRALIA)
610	22725270	TRERMINAL, BATTERY
611	25777413	SPRING, BATTERY
612	25777736	SPRING, BATTERY
613	22830256	CLIP, BELT
614	22708753	SCREW, 2.0X8MM, B, DTBID
615	22822355	COVER, BATTERY
616	22757128	HOLDER, BAR ANTENNA
617	22827094	KNOB, MODE

PARTS LIST

ABBREVIATIONS

1. **CAPACITOR:** CD = Ceramic Disk, PF = Plastic Film, BL = Barrier Layer, EL = Electrolytic, MY = Mylar, PP = Polypropylene, PS = Polystyrene, TT = Tantalum, PE = Polyethylene
   MFD = Microfarad, PF = Picofarad, V = Voltage, NP = Non Polarity
2. **RESISTOR:** CF = Carbon Film, CC = Carbon Composition, OMF = Oxide Metal Film, MF = Metal Film
   K = Kilo (1000), M = Mega (1000000)
3. **TOLERANCE**

Symbol	G	J	K	M	N	Z	P
%	±2	±5	±10	±20	±30	−20+80	0+100

Symbol	C	D
pF	±0.25	±0.5

IC/TRANSISTORS

Location No.	Part No.	Description
Q1	B0325500	IC, TA7358P OR TA7358AP
Q2	B0358385	IC, TA7787F
Q3	B0325650	IC, TA7373F
Q4	B0356880	IC, TA7688P OR NJM2066D
Q5	B0271030	IC, TD6133F
Q6	B0411835	IC, TC9183F
TR1	A6534440	TRANSISTOR, 2SA1048-GR
TR2	A6332530	TRANSISTOR, 2SC2668-O
TR3	A6332440	TRANSISTOR, 2SC2458-GR
TR4	A6002110	TRANSISTOR, RN1211
TR5	A6534440	TRANSISTOR, 2SA1048-GR
TR6	A6002110	TRANSISTOR, RN1211
TR7	A6046842	TRANSISTOR, 2SK184-Y, FET
TR8	A6332440	TRANSISTOR, 2SC2458-GR
TR9	A6332440	TRANSISTOR, 2SC2458-GR
TR10	A6542160	TRANSISTOR, 2SA1182-Y

DIODES

Location No.	Part No.	Description
D1	A7288690	DIODE, 1SV101
D2	A7288690	DIODE, 1SV101
D3	22119207	DIODE, 1SV149(PAIR)
D4	22119207	DIODE, 1SV149(PAIR)
D5	A7288680	DIODE, 1SV99
D6	A7160570	DIODE, 1SS176
D7	A7160570	DIODE, 1SS176
D8	A7160570	DIODE, 1SS176
D9	A7152800	DIODE, 1SS227

ELECTRICAL PARTS

Location No.	Part No.	Description
CF1	22153522	FILTER, CERAMIC, 10.7MHZ
CF2	22153524	FILTER, CERAMIC, 450KHZ
CF3	22153523	FILTER, CERAMIC, 10.7MHZ
IT1	22267473	IF TRANSFORMER, FM
IT2	22264964	IF TRANSFORMER, AM
IT3	22267474	IF TRANSFORMER, FM
IT4	22245538	COIL, OSCILLATOR DC/DC
J1	22198354	JACK HEADPHONE
L1	22243027	COIL, ANTENNA, FM
L2	22245483	COIL, RF, FM
L3	22245539	COIL, OSCILLATOR, FM
L4	22211405	COIL, 10UH
L5	22243141	COIL, ANTENNA, AM
L6	22211405	COIL, 10UH
L7	22211406	COIL, 120UH
L8	22211404	CHOKE COIL
L9	22211404	CHOKE COIL
L10	22211404	CHOKE COIL
LCD1	22104645	DISPLAY, LIQUID CRYSTAL (USA/CANADA)
LCD1	22104658	DISPLAY, LIQUID CRYSTAL (EUROPE/AUSTRALIA)
S1	22108065	SLIDE SWITCH MODE
X1	22153521	OSCILLATOR, CRYSTAL

CAPACITORS

Location No.	Part No.	Description
C1	20311150	CD, 15PF, 50V, J
C2	20343101	CD, 100PF, 50V, K
C3	20311470	CD, 47PF, 50V, J
C4	20343102	CD, 1000PF, 50V, K
C5	20311309	CD, 3PF, 50V, D
C6	20343101	CD, 100PF, 50V, K
C7	20343102	CD, 1000PF, 50V, K
C8	20311180	CD, 18PF, 50V, J
C9	20343101	CD, 100PF, 50V, K
C11	20311809	CD, 8PF, 50V, D
C12	20318332	BL, 3300PF, 25V, K
C13	20318223	BL, 0.022MFD, 25V, K
C14	20318223	BL, 0.022MFD, 25V, K
C16	20381391	PP, 390PF, 100V, J
C17	20311180	CD, 18PF, 50V, J
C18	20311470	CD, 47PF, 50V, J
C19	20318223	BL, 0.022MFD, 25V, K
C20	20318223	BL, 0.022MFD, 25V, K
C21	20427479	EL, 4.7MFD, 35V
C22	20343681	CD, 680PF, 50V, K
C23	20343681	CD, 680PF, 50V, K
C24	20428478	EL, 0.47MFD, 50V

Location No.	Part No.	Description
C25	20381391	PP, 390PF, 100V, J
C26	20318223	BL, 0.022MFD, 25V, K
C27	20428478	EL, 0.47MFD, 50V
C28	20428478	EL, 0.47MFD, 50V
C29	20318223	BL, 0.022MFD, 25V, K
C30	20318223	BL, 0.022MFD, 25V, K
C31	20318183	BL, 0.018MFD, 25V, K
C32	20318183	BL, 0.018MFD, 25V, K
C33	20422470	EL, 47MFD, 4V
C34	22360326	BL, 6800PF, 25V, M
C35	22360326	BL, 6800PF, 25V, M
C36	20311470	CD, 47PF, 50V, J
C37	22360326	BL, 6800PF, 25V, M
C38	20310006	CD, 16PF, 50V, J
C39	20343101	CD, 100PF, 50V, K
C40	20343101	CD, 100PF, 50V, K
C41	20428478	EL, 0.47MFD, 50V
C42	20428478	EL, 0.47MFD, 50V
C43	20343331	CD, 330PF, 50V, K
C44	22360326	BL, 6800PF, 25V, M
C45	22360326	BL, 6800PF, 25V, M
C46	20433101	EL, 100MFD, 6.3V
C47	20423220	EL, 22MFD, 6.3V
C48	20423220	EL, 22MFD, 6.3V
C49	20428478	EL, 0.47MFD, 50V
C50	20433101	EL, 100MFD, 6.3V
C51	20428478	EL, 0.47MFD, 50V
C52	20432221	EL, 220MFD, 4V
C101	20361222	CD, 2200PF, 50V, Z, CHIP
C102	20361223	CD, 0.022MFD, 50V, Z, CHIP
C103	20364104	CD, 0.1MFD, 25V, Z, CHIP
C104	20364104	CD, 0.1MFD, 25V, Z, CHIP
C105	20361223	CD, 0.022MFD, 50V, Z, CHIP
C106	20332180	CD, 18PF, 50V, J, CHIP
C107	20332180	CD, 18PF, 50V, J, CHIP
C108	20331100	CD, 10PF, 50V, D, CHIP
C109	20361222	CD, 2200PF, 50V, Z, CHIP
C110	20361223	CD, 0.022MFD, 50V, Z, CHIP
TC1	22309235	TRIMMER, 10PF
TC2	22309235	TRIMMER, 10PF

RESISTORS

Location No.	Part No.	Description
R1	22557104	CF, 100K OHM, 1/6W, J
R2	22557104	CF, 100K OHM, 1/6W, J
R3	20511472	CF, 4.7K OHM, 1/6W, J
R4	20511470	CF, 47 OHM, 1/6W, J
R5	22557104	CF, 100K OHM, 1/6W, J
R6	22557104	CF, 100K OHM, 1/6W, J
R7	20511473	CF, 47K OHM, 1/6W, J
R8	22557682	CF, 6.8K OHM, 1/6W, J
R9	22557123	CF, 12K OHM, 1/6W, J
R10	22557123	CF, 12K OHM, 1/6W, J
R11	20511472	CF, 4.7K OHM, 1/6W, J
R12	22557184	CF, 180K OHM, 1/6W, J
R13	22557104	CF, 100K OHM, 1/6W, J
R14	20512479	CF, 4.7 OHM, 1/6W, J
R15	20511223	CF, 22K OHM, 1/6W, J
R16	22557273	CF, 27K OHM, 1/6W, J
R17	22557123	CF, 12K OHM, 1/6W, J
R18	22557123	CF, 12K OHM, 1/6W, J
R19	22557824	CF, 820K OHM, 1/6W, J
R20	22557393	CF, 39K OHM, 1/6W, J
R21	20511101	CF, 100 OHM, 1/6W, J
R22	22557224	CF, 220K OHM, 1/6W, J
R23	20511102	CF, 1K OHM, 1/6W, J
R24	22557123	CF, 12K OHM, 1/6W, J
R25	22557123	CF, 12K OHM, 1/6W, J
R26	22557229	CF, 2.2 OHM, 1/6W, J
R27	22557229	CF, 2.2 OHM, 1/6W, J
R28	20511472	CF, 4.7K OHM, 1/6W, J
R29	20511330	CF, 33 OHM, 1/6W, J
R101	20541104	OMF, 100K OHM, 1/10W, J, CHIP
R102	20541472	OMF, 4.7K OHM, 1/10W, J, CHIP
R103	20541104	OMF, 100K OHM, 1/10W, J, CHIP
R104	20541154	OMF, 150K OHM, 1/10W, J, CHIP
R105	20541223	OMF, 22K OHM, 1/10W, J, CHIP
VR1	22610016	VARIABLE, 20K OHMX2, A
VR2	22658817	VARIABLE, SEMI FIXED, 10K-B

ACCESSORIES

Location No.	Part No.	Description
AC01	22908552	OWNER"S MANUAL (USA)
AC01	22908553	OWNER"S MANUAL (CANADA)
AC01	22908554	OWNER"S MANUAL (EUROPE/AUSTRALIA)
AC02	22152749	HEADPHONE (USA/CANADA)
AC02	22152750	HEADPHONE (EUROPE/AUSTRALIA)
AC03	22957628	CAUTION SHEET (USA)
AC04	22810165	EAR PAD SET (USA/CANADA)
AC04	22810166	EAR PAD SET (EUROPE/AUSTRALIA)

TOSHIBA CORPORATION
1-1, SHIBAURA 1-CHOME, MINATO-KU, TOKYO 105, JAPAN