Clarion

SERVICE MANUAL

Closer Relations through "CLARION SERVICE MANUAL"

DATSUN AUTOMOBILE GENUINE RADIO
MODEL RN-914B

Fabricant: CLARION CO., LTD./Exportations: CLARION SHOJI CO., LTD.

3, Kojimachi 5-chome, Chiyoda-ku, Tokyo, 102 Japan Tel.: (265) 2931 Telex: J22908, J22152 CLARISHO

Succursales outre-mer:

CLARION SHOJI (EUROPA) G.M.B.H. 2000 Hamburg 76, Schöne Aussicht 35, West Germany. Tel.: 220-7667 Telex: 41214969

CLARION SHOJI CO., LTD. (U.S.A.) 5500 Rosecrans Ave., Lawndale, Calif., 90260 U.S.A. Tel.: 213-973-1100 Telex: 66-4447

CLARION CORPORATION OF AMERICA 5500 Rosecrans Ave., Lawndale, Calif., 90260 U.S.A. Tel.: 213-973-1100 Telex: 66-4447

CLARION CORPORATION OF AMERICA, EASTERN DIVISION 421 North Midland Ave., Saddle Brook, N.J. 07662 U.S.A. Tel.: 201-791-1200 Telex: 13805

CLARION (MALAYSIA) SDN. BHD. 9 1/2 m.s. Bayan Lepas, Penang, Malaysia Tel.: 897-206, 897-334 Telex: PG 255 (Penang)

CLARION DO BRASIL INDUSTRIA E COMERCIO LTDA. Caixa Postal 5033, Sao Paulo, Brasil Tel.: 32-5161 Telex: 3821123

CLARION (HONG KONG) CO., LTD. 225 Ping Chau Gallery, Ocean Terminal, Kowloon, H.K. Tel.: 3-675785 Telex: HK4922

* SPECIFICATIONS:

Circuit system:	Superheterodyne
Tuning system:	μ-tuning, 5-push-buttons (Manual and Auto)
Receive range:	530KHz~1605KHz
Intermediate frequency:	262.5KHz
Maximum sensitivity:	Less than 20dB (10μV)
Quieting sensitivity:	Less than 30dB (31.62μV)
Selectivity:	More than 20dB (at $\pm$10KHz detune)
Image rejection ratio:	More than 50dB
Electrical fidelity:	100Hz H 0$\pm$3dB
	L 3$\pm$3dB
	4000Hz H $-$18$\pm$5dB
	L $-$28$\pm$5dB
Auto stop sensitivity:	Dx 28~40dB
	Lo 52~70dB
Power output:	3W (for 10% distortion) More than 4W (for max volume)
Power supply voltage:	DC.13.2V Negative ground
Load impedance:	4Ω
Dimensions:	Width 160m/m
	Height 55m/m
	Depth 150m/m
Weight:	1.6kg
Semiconductors:	Transistors 17, IC 1, Diodes 9

* COMPONENT

	Main unit	1
SPA-482-101 (090-0130-18)	Speaker assembly	1
PAP-010-115	Antenna assembly	1
RKA-017-105	Remote controller	1
013-3179-00	Switch (For Antenna)	1

Printed in Japan 298-1834-00

Clarion

DATSUN AUTOMOBILE GENUINE RADIO
MODEL RN-914B

Fabricant: CLARION CO., LTD./Exportations: CLARION SHOJI CO., LTD.
3, Kojimachi 5-chome, Chiyoda-ku, Tokyo, 102 Japan Tel.: (265) 2931 Telex: J22908, J22152 CLARISHO
Succursales outre-mer:
CLARION SHOJI (EUROPA) G.M.B.H. 2000 Hamburg 76, Schöne Aussicht 35, West Germany. Tel.: 220-7667 Telex: 41214969
CLARION SHOJI CO., LTD. (U.S.A.) 5500 Rosecrans Ave., Lawndale, Calif., 90260 U.S.A. Tel.: 213-973-1100 Telex: 66-4447
CLARION CORPORATION OF AMERICA 5500 Rosecrans Ave., Lawndale, Calif., 90260 U.S.A. Tel.: 213-973-1100 Telex: 66-4447
CLARION CORPORATION OF AMERICA, EASTERN DIVISION 421 North Midland Ave., Saddle Brook, N.J. 07662 U.S.A. Tel.: 201-791-1200 Telex: 13805
CLARION (MALAYSIA) SDN. BHD. 9 1/2 m.s. Bayan Lepas, Penang, Malaysia Tel.: 897-206, 897-334 Telex: PG 255 (Penang)
CLARION DO BRASIL INDUSTRIA E COMERCIO LTDA. Caixa Postal 5033, Sao Paulo, Brasil Tel.: 32-5161 Telex: 3821123
CLARION (HONG KONG) CO., LTD. 225 Ping Chau Gallery, Ocean Terminal, Kowloon, H.K. Tel.: 3-675785 Telex: HK4922

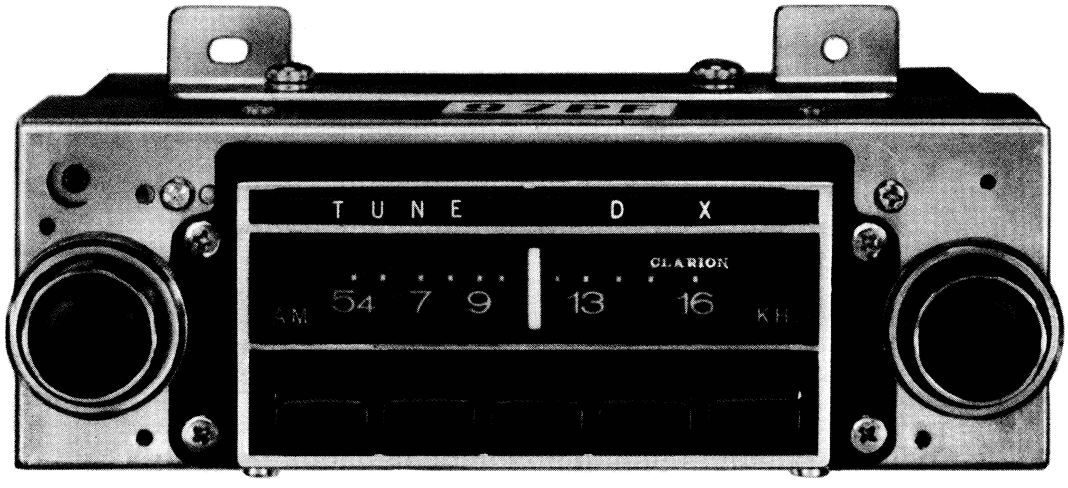

* SPECIFICATIONS:

Circuit system:	Superheterodyne
Tuning system:	μ-tuning, 5-push-buttons (Manual and Auto)
Receive range:	530KHz~1605KHz
Intermediate frequency:	262.5KHz
Maximum sensitivity:	Less than 20dB (10μV)
Quieting sensitivity:	Less than 30dB (31.62μV)
Selectivity:	More than 20dB (at $\pm$10KHz detune)
Image rejection ratio:	More than 50dB
Electrical fidelity:	100Hz H 0$\pm$3dB
	L 3$\pm$3dB
	4000Hz H $-$18$\pm$5dB
	L $-$28$\pm$5dB
Auto stop sensitivity:	Dx 28~40dB
	Lo 52~70dB
Power output:	3W (for 10% distortion) More than 4W (for max volume)
Power supply voltage:	DC.13.2V Negative ground
Load impedance:	4Ω
Dimensions:	Width 160m/m
	Height 55m/m
	Depth 150m/m
Weight:	1.6kg
Semiconductors:	Transistors 17, IC 1, Diodes 9

* COMPONENT

	Main unit	1
SPA-482-101 (090-0130-18)	Speaker assembly	1
PAP-010-115	Antenna assembly	1
RKA-017-105	Remote controller	1
013-3179-00	Switch (For Antenna)	1

Printed in Japan 298-1834-00

* ADJUSTMENT:

A. Adjustment of IF Section

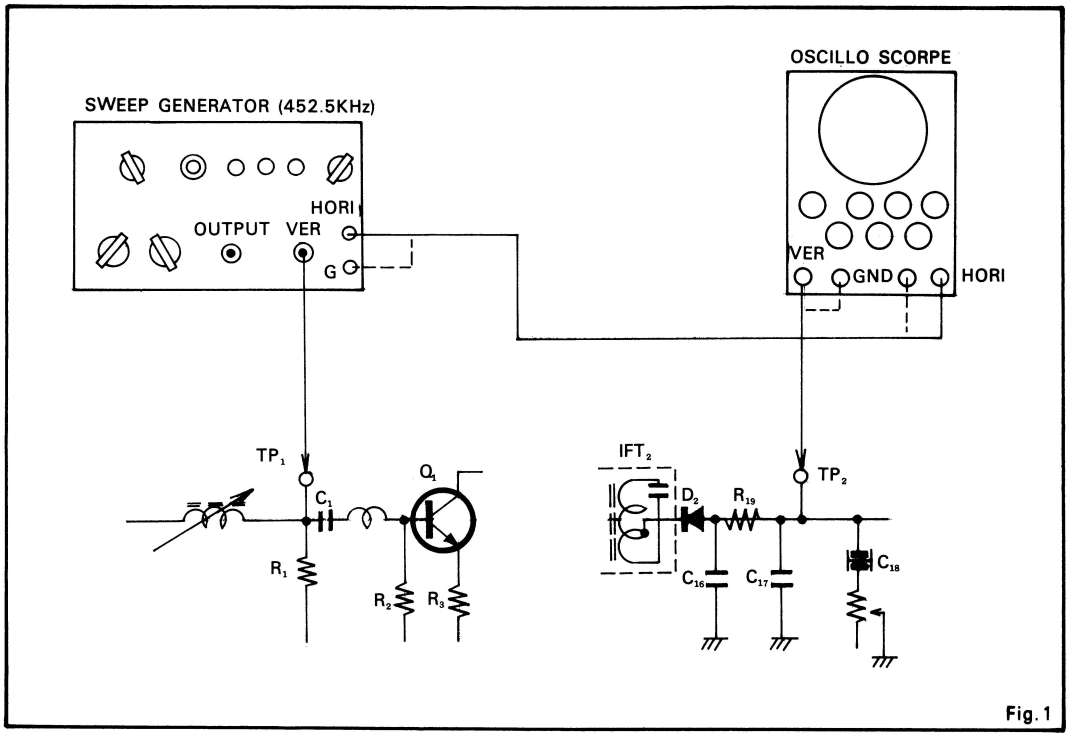

Fig. 1

1. Make the connections as shown in Fig. 1. Set the sweep generator to 262.5KHz and obtain a proper IF waveform on the oscilloscope.
2. After a proper waveform is obtained, superimpose 262.5KHz (IF) marker on it and adjust primary and secondary cores of IFT1 (005-0660-00) and IFT2 (005-0560-01) in order to obtain a waveform like the one shown in Fig. 2. Preferably use a nonmetallic screw driver for the adjustment.
   In this case, the waveform should not be so sharp in the center and should possess left-right symmetry.

When the adjustment is made keeping the dial pointer at 600KHz frequency shift at the time of automatic stop is easily minimised.

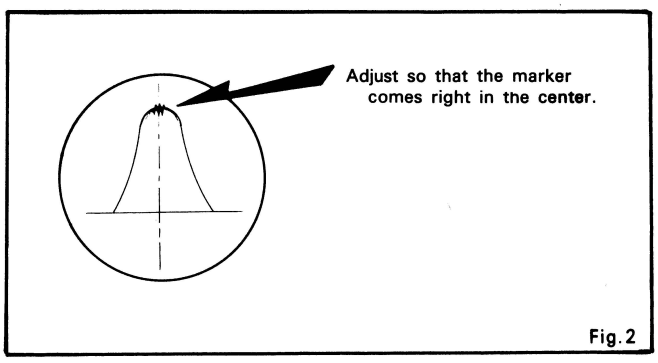

Fig. 2

B. Tracking adjustment

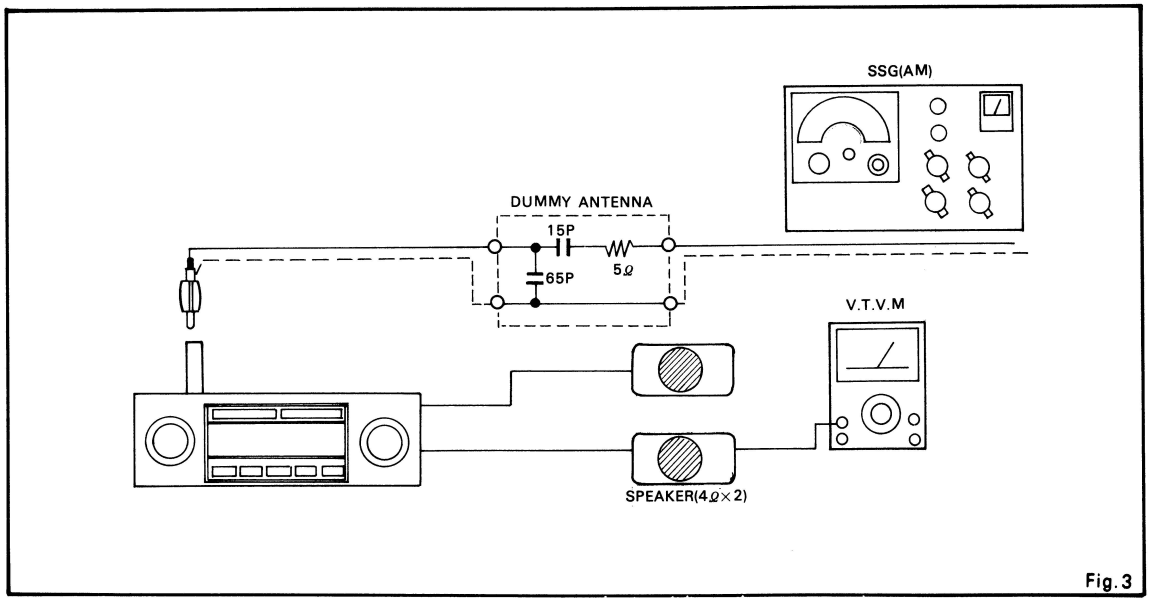

Fig. 3

Apply the output of SSG to the set through dummy load.
Bring the set's dial pointer to the maximum frequency point on the dial and set the AM SG to 1620KHz.
Adjust the OSC trimmer to receive 1620KHz.
Now adjust the ANT trimmer and RF trimmer on the same frequency so that the Audio output becomes maximum. 20~30dB output of SSG is suitable for the adjustment.
The volume and tone controls must be at maximum position.

C. Adjustment of Trigger Section

1. Adjustment of IFT8 and 9.
   a. Connect the oscilloscope vertical input of Fig. 1 to TP3.
   b. Disconnect the purple lead between transistor Q6 and diode D7.
      (If not disconnected, trigger waveform will not appear unless search is performed.)
   c. Put in 262.5KHz IF signal from sweep generator and obtain IF waveform.
   d. Adjust the cores of IFT3, 4 so that the marker comes in the center and the waveform becomes as wide as possible.
2. Adjustment of Stop Sensitivity.
   a. Adjustment of stop sensitivity at DX is performed by VR1.
      Adjust the semifixed VR (3KΩ) so that the sensitivity becomes as specified (28~40dB).
   b. Verify that the sensitivity is in the range of 52~70dB at each frequency at LO.
3. Verification of Auto Stop Frequency Shift.
   If frequency shift is found to be remarkable, since adjustment of Inter waveform or trigger waveform is faulty, once again check these waveforms.

* CIRCUIT OPERATION:

Section A	·····	Switching circuit controlled by trigger output
Section B	·····	Bistable hold circuit
Section C	·····	Switching circuit controlled by output of section B
Section D	·····	Motor circuit
Section E	·····	AM stop sensitivity adjustment
Section F	·····	AM AGC circuit switching

(Section A)

Performs switching controlled by Q7 trigger output. When the trigger output becomes more than a fixed value, Q7 turns ON and potential of (P-1) becomes almost zero.
In stationery state, the trigger circuit is turned OF by D4 and D5.
D8 is for making signal monitoring possible.

(Section B)

Consider that a bistable hold circuit is formed and power is just supplied.
Considering points (P-2) and (P-3), since point (P-2) is in stable state delayed with respect to point (P-3) by a time constant almost determined by R44 and C41, when power is turned on (when power switch of the set is turned ON), Q8 is always set to the ON state and Q9 to the OFF state.
Now if the search switch S1 is turned ON for auto tuning, Q8 compulsority turns OFF and Q9 turns ON. At this time, potential at point (P-3) becomes almost zero.
This state is maintained until the switching circuit of section A operates. When Q7 turns ON, Q9 turns OFF and attains stable state. (Q8 is ON).

(Section C)

When bias is being applied at point (P-3) of the switching circuit comprising Q10 and Q11, Q10 turns ON when (Q9 is OFF = stable state), therefore, Q11 turns OFF.
Now when circuit B reverses and Q9 turns ON (when the search switch S1 is depressed), Q10 turns OFF and Q11 turns ON and the plunger motor is driven. (⊖ terminal of the plunger and the motor is connected to the collector of Q11).

(Section D)

Q12 and Q15, Q14 and Q13, and Q16 and Q17 are in pairs. Q16 and Q17 form the memory circuit. Considering that power is just turned ON, comparing Q16 and Q17, since C38 is connected to the base of Q16, due to the time constant component determined by the value of C38, Q17 always turns ON and Q16 turns OFF. Now since Q16 turns ON and Q17 turns OFF, Q14 turns ON and Q15 turns OFF. When Q14 turns ON, Q13 is biased and turns ON and similarly when Q15 turns OFF, Q12 turns OFF. Therefore, current flows from Q13→motor→Q14.
Polarity of the motor has been set so that at this time the tuner moves from low frequency side to high frequency side. Circuit of section C turns ON, the motor is driven and the tuner moves from low to high frequency side, and when it comes to the stop position, the DOWN use switch serving as stopper turns ON, Q17 turns OFF, Q16 turns ON, Q14 turns OFF, Q15 turns ON, Q13

turns OFF, Q12 turns ON, and the current flow from Q12 → motor → Q15. Therefore, polarity of the motor is reversed, the motor moves in the opposite direction and the tuner moves from high to low frequency side. (Operation is reversed). The tuner moves in this state and when the Up switch is turned ON, the tuner again moves to the right by the operation just opposite to that described above.

(Sections E, F, G)

These circuits turn OFF when search is being made and turn ON (shorted) in stationery state.

States of Circuits (A.T section)

1) When OFF
2) When ON (power supply)
   a) Q6 OFF (by D4, 5)
   b) Q7 OFF
   c) { Q8 ON / Q9 OFF }
   d) { Q10 ON / Q11 OFF (motor,plunger are not driven) }
   e) { Q16 ON / Q17 OFF } right side start gets registered.
   f) Q13 ON
      Q14 ON
      Q12 OFF
      Q15 OFF
3) Search SW ON
   Q6 ON
   Q7 OFF (until signal is received)
   Q8 OFF
   Q9 ON
   Q10 OFF
   Q11 ON (motor, plunger are driven)
   e) and f) remain same as in (2).
4) When signal is received
   Q7 ON → soon turns OFF (Q16, Q10 turn OFF)
   Q8 ON
   Q9 OFF
   Q10 ON
   Q11 OFF (motor, plunger stop)
   Return back to state (2).

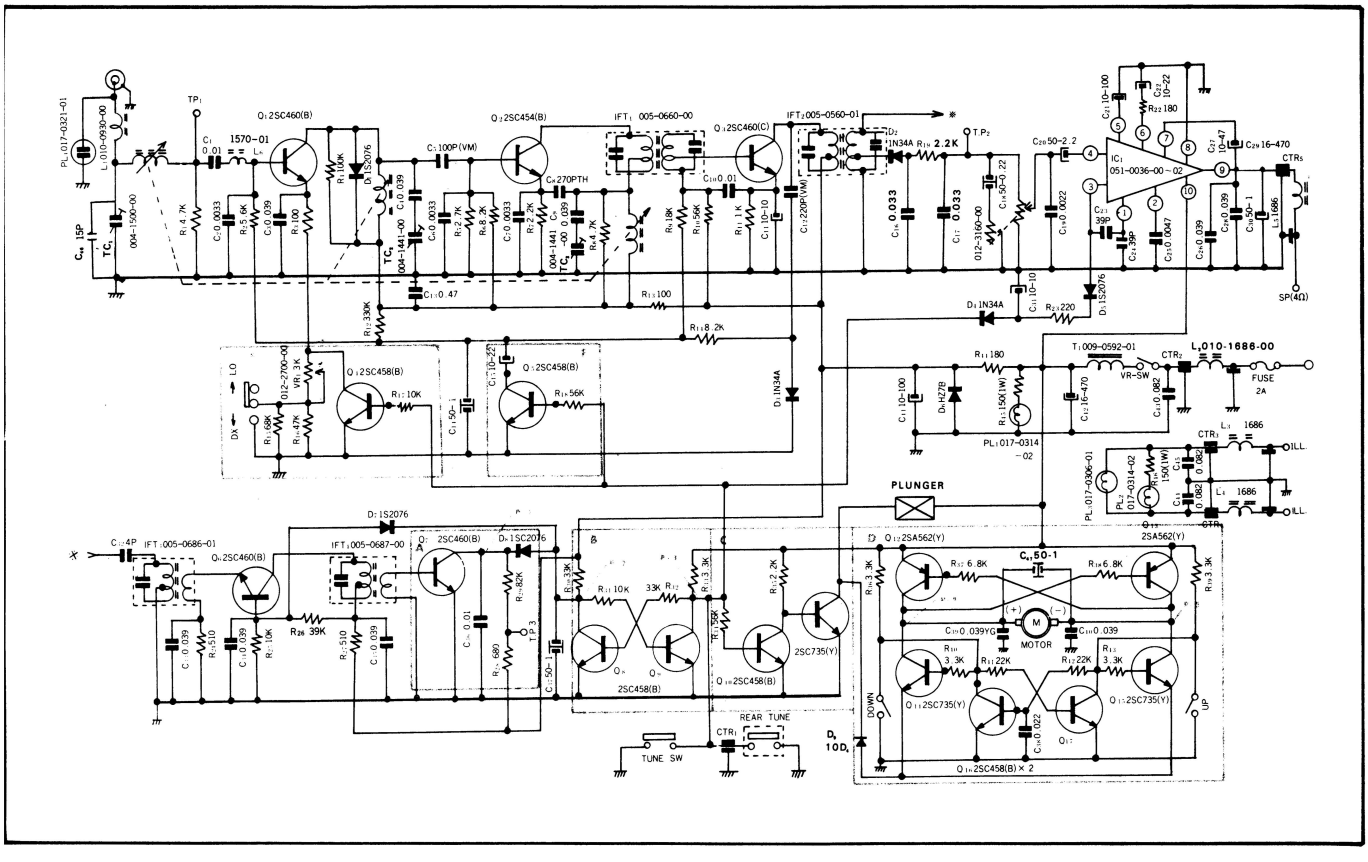

* EXPLODED VIEW:

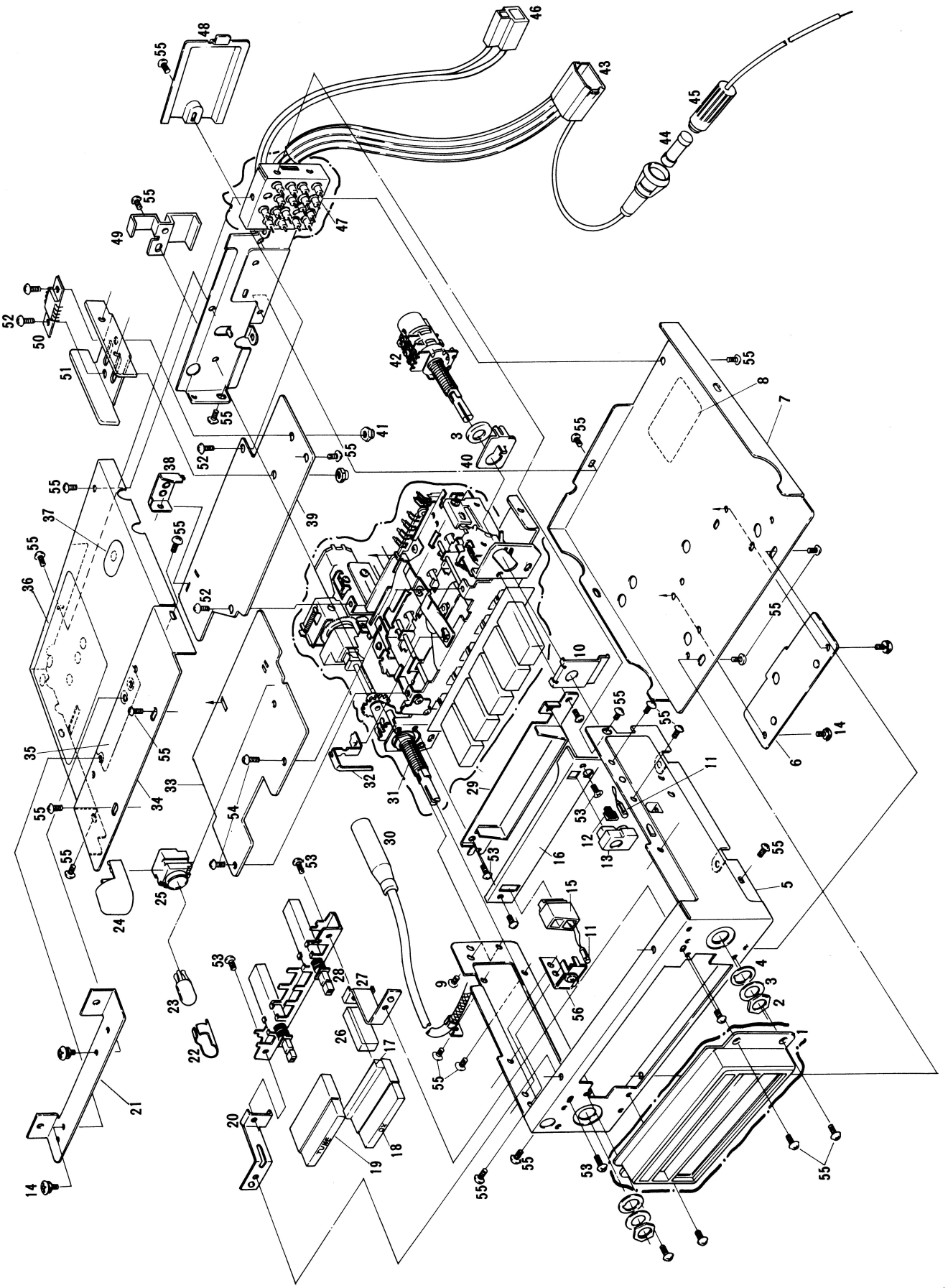

＊PARTS LIST:

⊙Main Section

REF.NO.	PART NO.	DESCRIPTION	REF.NO.	PART NO.	DESCRIPTION
1	940-2304-00	Escutcheon assembly	31	942-0234-04	Auto tunning mechanism
2	722-0231-00	Special nut	31-1	935-1456-11	3 Coil push tuner
3	745-0451-00	Special washer	31-2	943-0144-00	Gear mechanism
4	745-0430-01	Special washer	31-3	680-0044-00	Push button
5	308-0856-01	Front cover	32	376-0775-03	Dial pointer
6	300-5344-00	Mounting bracket	33	099-4350-06	PWB
7	311-0858-01	Lower case	34	310-0814-04	Upper case
8	286-3678-00	Setplate	35	347-0483-00	Paper part
9	731-3006-80	Taptight	36	290-2675-00	Label
10	330-5431-01	Pressed part	37	290-2567-01	Label
11	017-0314-02	Pilotlamp	38	330-4944-00	Pressed part
12	335-0741-01	Molded part	39	099-4386-04	PWB
13	345-2576-02	Rubber part	40	330-5523-00	Pressed part
14	732-5008-00	Sems screw	41	725-0182-00	Plate nut
15	345-2546-00	Rubber part	42	012-3160-00	Variable resistor
16	372-2668-02	Dial plate	43	852-4871-00	Extension lead
17	345-2578-00	Rubber part	44	120-0020-00	Fuse
18	382-0080-00	Button	45	850-1905-00	A-lead
19	382-0081-00	Button	46	851-2158-00	Speaker lead
20	330-5569-00	Pressed part	47	944-0432-03	Filter assembly
21	300-5342-00	Mounting bracket	48	314-0376-00	Lead holder
22	330-5002-00	Pressed part	49	330-5524-00	Pressed part
23	017-0306-01	Pilotlamp	50	051-0036-00	IC
24	335-0635-06	Molded part	51	313-0904-01	Heat sink
25	070-0927-01	Pilotlamp socket	52	714-3006-81	Machine screw
26	345-2574-01	Rubber part	53	714-3004-11	Machine screw
27	330-5487-00	Pressed part	54	714-3006-11	Machine screw
28	013-3199-00	Switch	55	714-3004-81	Machine screw
29	374-0668-01	Back plate	56	004-1500-00	Trimmer
30	092-0499-01	Antenna recept			

※(add)

380-3291-00 Knob 2

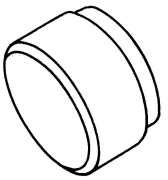

380-3292-00 Knob 2

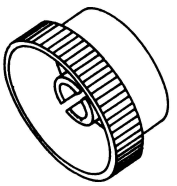

722-0281-00 Special nut 2

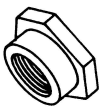

745-0291-00 Special washer 2

Electlical Section

REF.NO.	PART NO.	DESCRIPTION
Q_2	102-0454-02	Transistor(2SC454B)
$Q^{4,5,8,9}_{10,16,17}$	102-0458-02	Transistor(2SC458B)
$Q_{1,6,7}$	102-0460-03	Transistor(2SC460B)
Q_3	102-0460-03	Transistor(2SC460C)
$Q_{14,15,11}$	102-0735-25	Transistor(2SC735Y)
$Q_{12,13}$	100-0562-25	Transistor(2SA562Y)
IC_1	051-0036-00	IC (HA1322)
$D_{2,3,4}$	001-0010-00	Diode(1N34A)
$D_{1,5,7,8}$	001-0095-00	Diode(1S2076)
D_6	001-0099-01	Diode(HZ7B)
L_1	010-0930-00	Coil
$L_{2,3,4,5}$	010-1686-00	Coil
IFT_1	005-0660-00	IF transfomer
IFT_2	005-0560-01	IF transfomer
IFT_3	005-0686-01	IF transfomer
IFT_4	005-0687-00	IF transfomer
T_1	009-0592-01	Choke
	073-0431-00	Terminal
$TC_{2,3}$	004-1441-00	Trimmer
C_{32}	151-4096-13	Ceramic capacitor (4PFCH)
$C_{23,24}$	153-3902-13	Ceramic capacitor (39PFCH)
C_8	156-2711-50	Ceramic capacitor (270PFCH)
C_{39}	165-3935-02	Ceramic capacitor (0.039μFYG)
C_{13}	148-4743-12	ML capacitor (50V0.47μF)
C_5	144-1012-14	Mica capacitor (50V100PF)
C_{12}	144-2212-17	Mica capacitor (50V220PF)
C_{19}	141-2222-11	Mica capacitor (50V0.0022μF)
$C_{2,6,7}$	141-3322-12	Mica capacitor (50V0.0033μF)
C_{25}	141-4722-12	Mica capacitor (50V0.0047μF)
$C_{1,10,36}$	141-1032-12	Mica capacitor (50V0.01μF)
$C_{16,38}$	141-2233-13	Mica capacitor (50V0.022μF)
$C_{16,17}$	141-3333-13	Mica capacitor (50V0.033μF)
$C^{3,4,9,40,26}_{28,33,34,35}$	141-3933-13	Polyester capacitor (50V0.039μF)
$C_{43,44,45}$	141-8233-15	Polyester capacitor (50V0.082μF)
$C_{11,31}$	180-1064-22	Electrolytic capacitor (10V10μF)

REF.NO.	PART NO.	DESCRIPTION
$C_{15,22}$	180-2264-22	Electrolytic capacitor (10V22μF)
C_{27}	180-4764-22	Electrolytic capacitor (10V47μF)
$C_{21,41}$	180-1074-22	Electrolytic capacitor (10V100μF)
$C_{14,30,37}$	180-1054-62	Electrolytic capacitor (50V1μF)
C_{20}	180-2254-62	Electrolytic capacitor (50V2.2μF)
C_{18}	042-0140-00	Special capacitor (50V0.22μF)
$C_{29,42}$	042-0173-00	Special capacitor (16V470μF)
R_{44}	110-1811-41	Solid resistor (½W180Ω)
R_{28}	110-6811-41	Solid resistor (½W680Ω)
R_{19}	110-1521-41	Solid resistor (½W1.5KΩ)
$R_{45,46}$	115-1512-51	Film resistor (1W150Ω)
$R_{3,13}$	111-1011-32	Film resistor (¼W100Ω)
R_{22}	111-1811-32	Film resistor (¼W180Ω)
R_{23}	111-2211-32	Film resistor (¼W220Ω)
$R_{24,27}$	111-5111-32	Film resistor (¼W510Ω)
$R_{7,35}$	111-2221-32	Film resistor (¼W2.2KΩ)
R_5	111-2721-32	Film resistor (¼W2.7KΩ)
$R_{33,36,39,40,43}$	111-3321-32	Film resistor (¼W3.3KΩ)
R_{11}	111-1021-32	Film resistor (¼W1KΩ)
$R_{1,8}$	111-4721-32	Film resistor (¼W4.7KΩ)
R_2	111-5621-32	Film resistor (¼W5.6KΩ)
$R_{37,38}$	111-6821-32	Film resistor (¼W6.8KΩ)
$R_{6,14}$	111-8221-32	Film resistor (¼W8.2KΩ)
$R_{17,25,31}$	111-1031-32	Film resistor (¼W10KΩ)
$R_{41,42}$	111-2231-32	Film resistor (¼W22KΩ)
$R_{30,32}$	111-3331-32	Film resistor (¼W33KΩ)
R_{16}	111-4731-32	Film resistor (¼W47KΩ)
$R_{10,18,34}$	111-5631-32	Film resistor (¼W56KΩ)
R_{15}	111-6831-32	Film resistor (¼W68KΩ)
R_{29}	111-8231-32	Film resistor (¼W82KΩ)
R_4	111-1041-32	Film resistor (¼W100KΩ)
R_9	111-1831-32	Film resistor (¼W18KΩ)
R_{26}	111-3931-32	Film resistor (¼W39KΩ)
R_{12}	111-3341-32	Film resistor (¼W330KΩ)

* PRINTED WIRING BOARD:

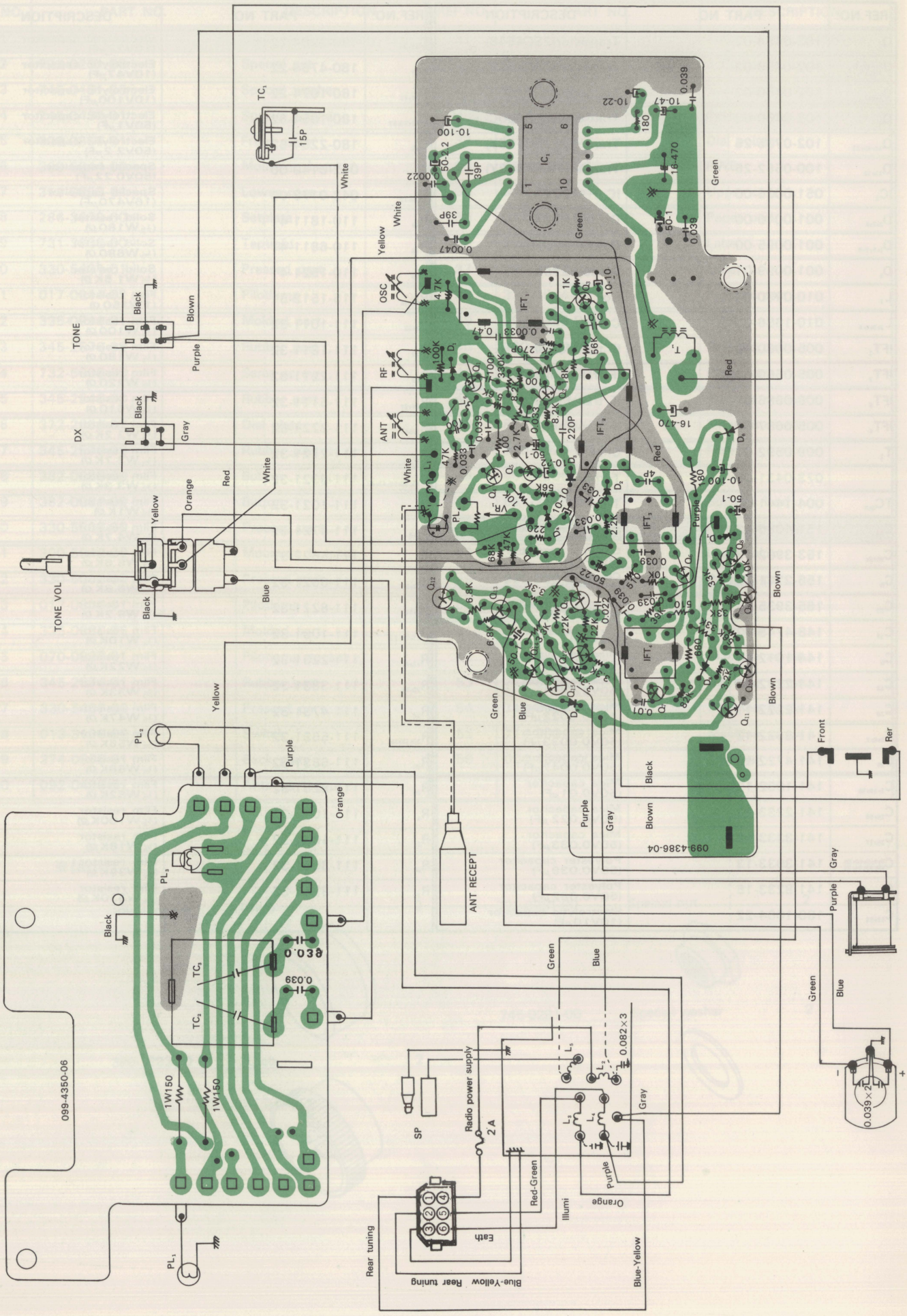

* PRINTED WIRING BOARD:

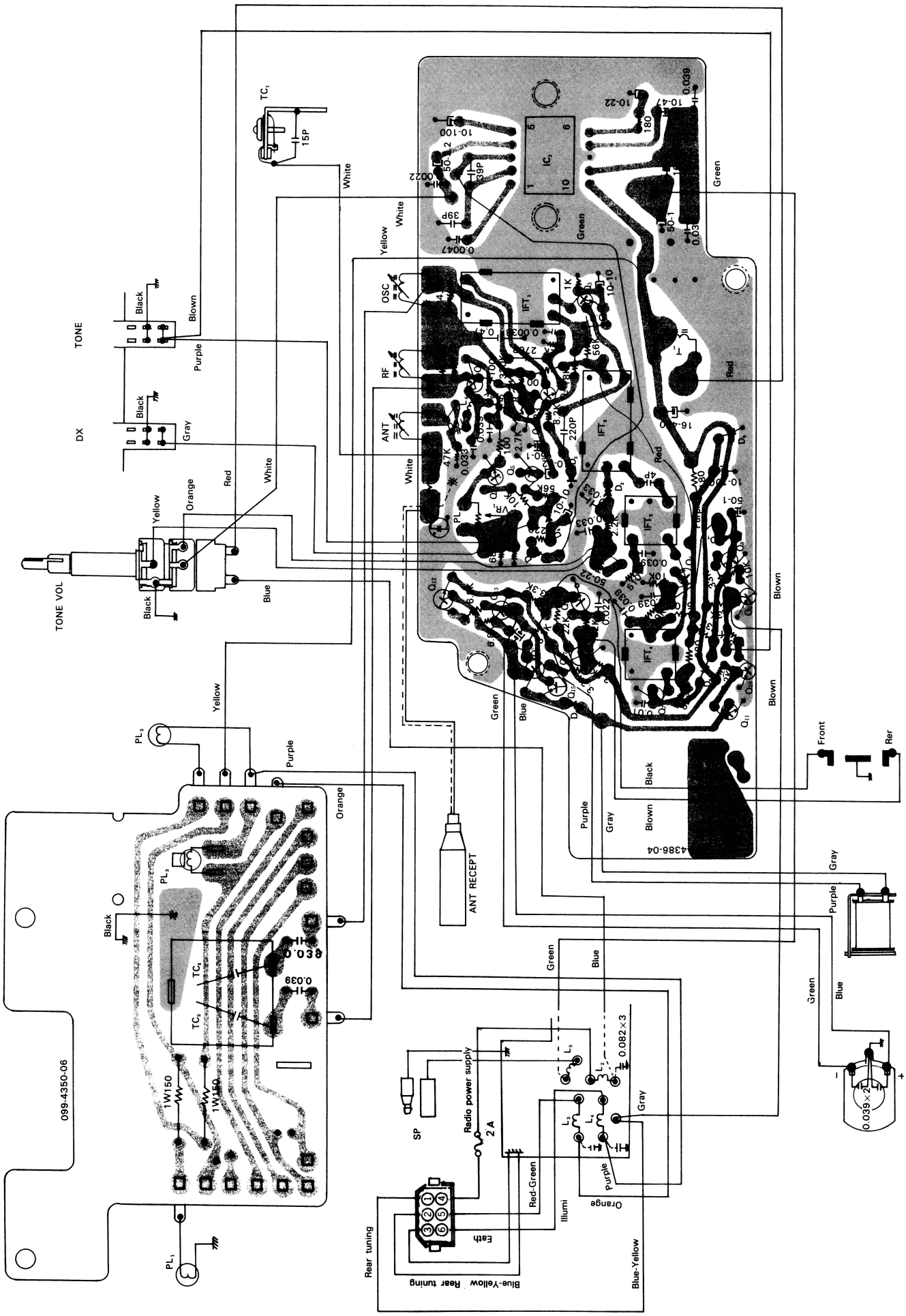

* CIRCUIT DIAGRAM

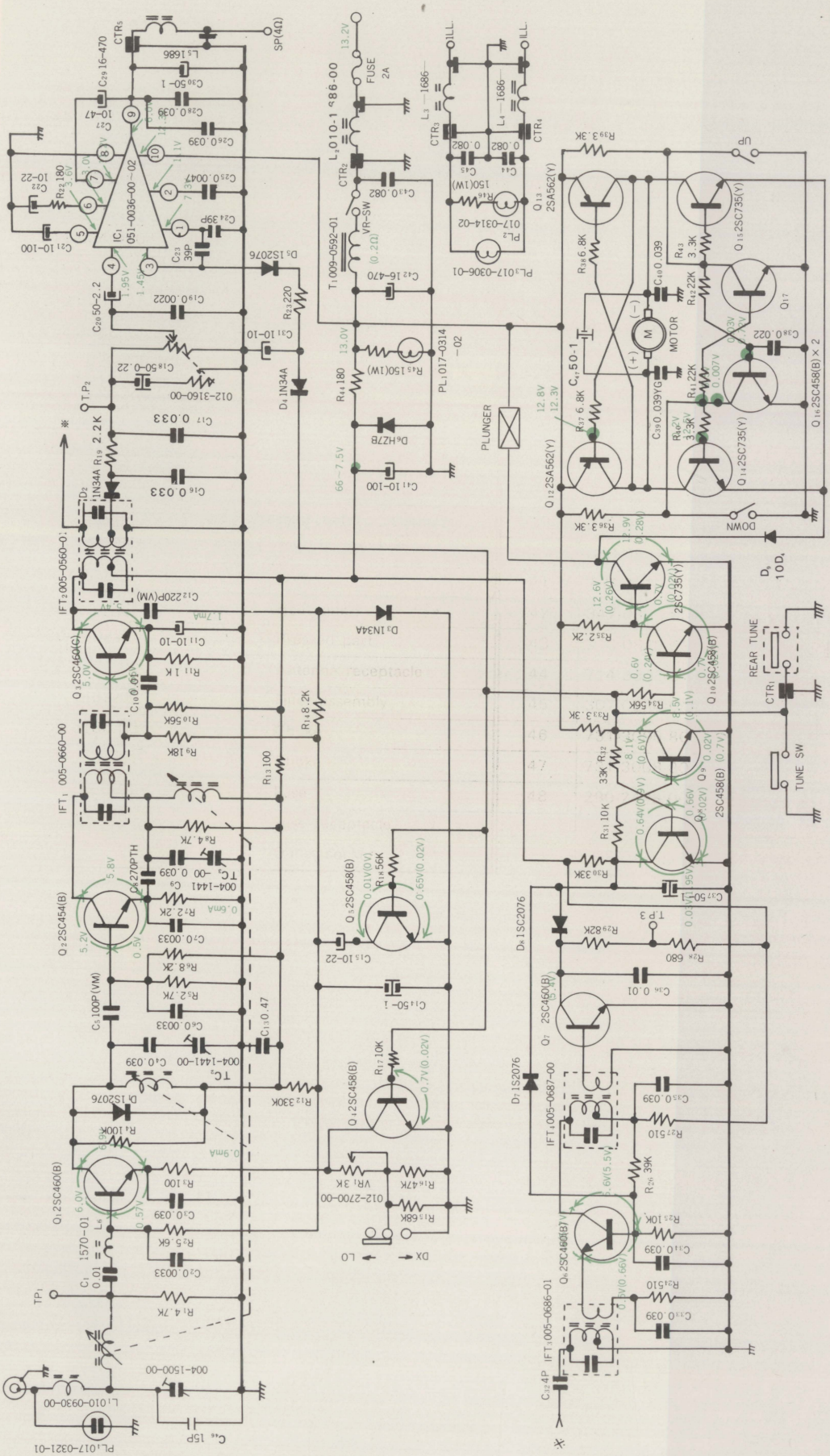

NOTE:
a. * Value within brackets in the voltage at search.
b. * The value of voltage written above is at UP (when the pointer is moving from lower frequency to higher frequency side) and that written below is at DOWN (pointer moving from higher frequency to lower frequency).
However, for the transistor pair, these values interchange at UP and DOWN.

* CIRCUIT DIAGRAM

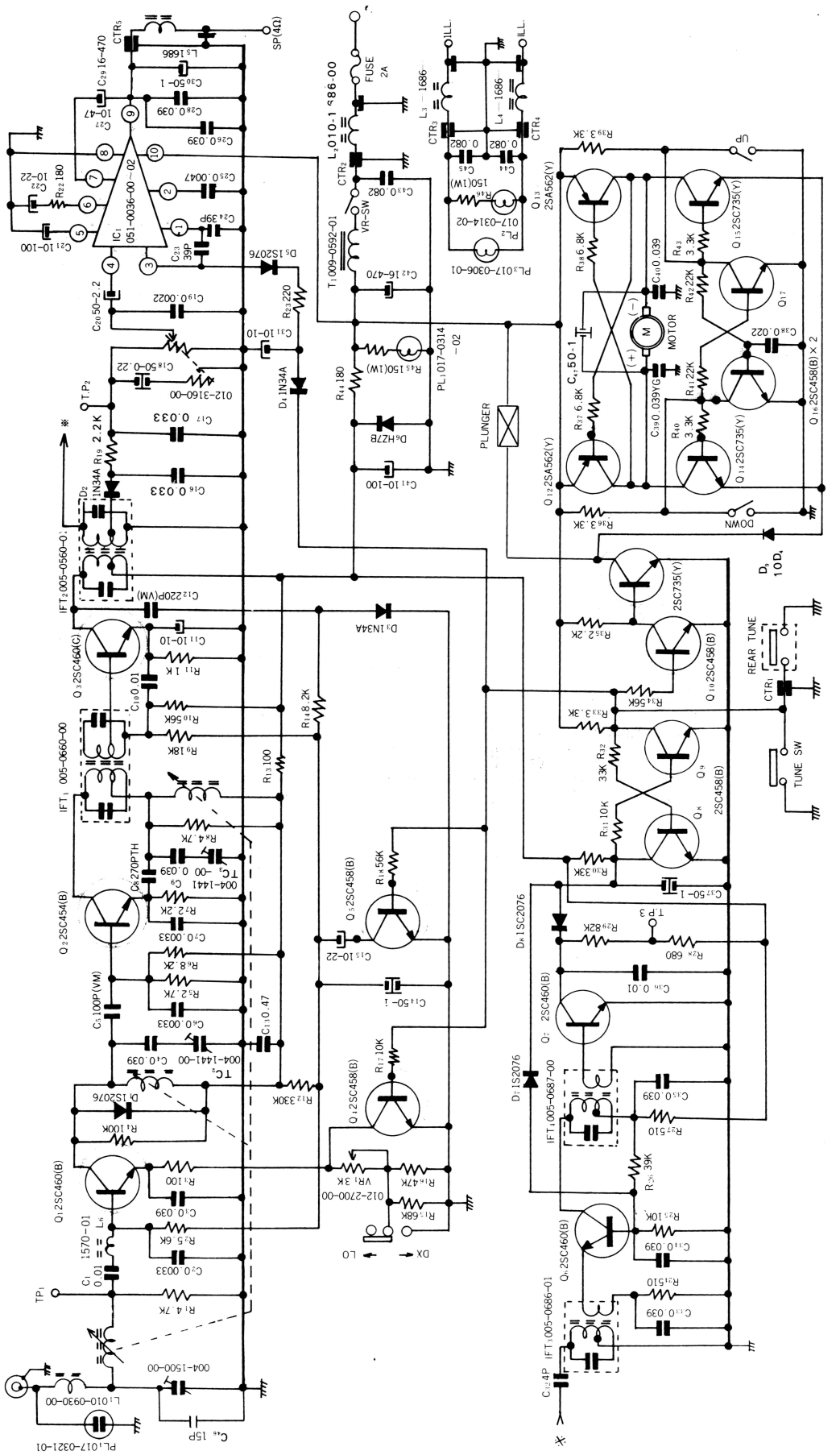

NOTE:
a. * Value within brackets in the voltage at search.
b. * The value of voltage written above is at UP (when the pointer is moving from lower frequency to higher frequency side) and that written below is at DOWN (pointer moving from higher frequency to lower frequency).
However, for the transistor pair, these values interchange at UP and DOWN.

MEMO