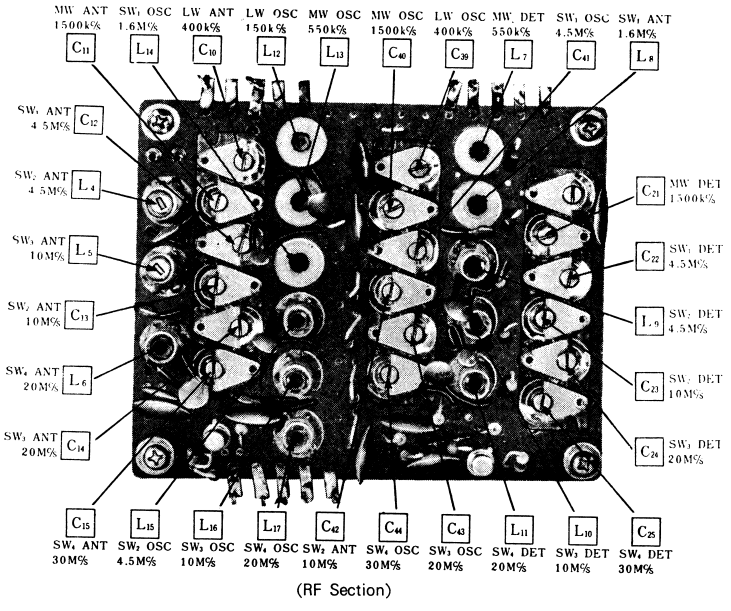

Fig. 12 Component View - Parts Identification, Alignment Points.

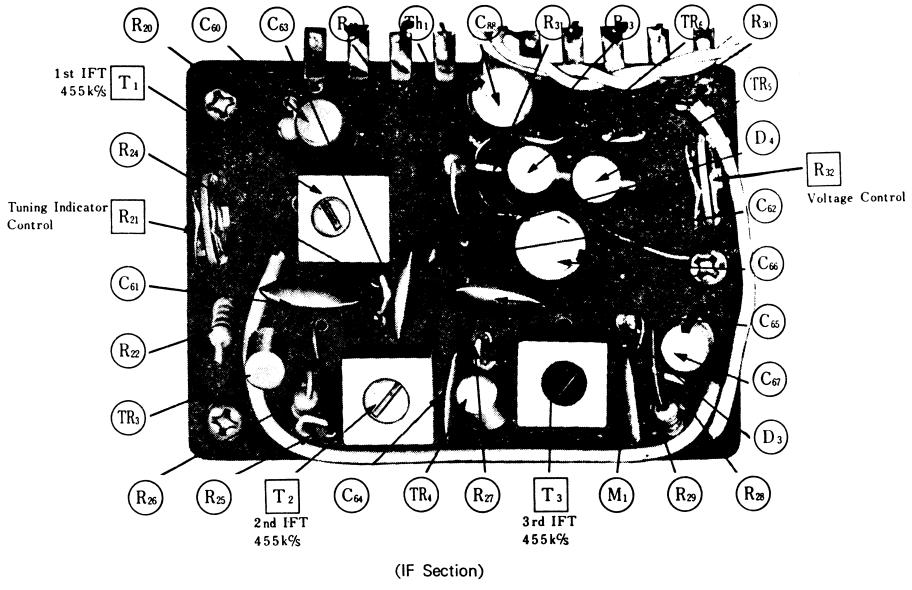

Fig. 14 Component View - Parts Identification, Alignment Points.

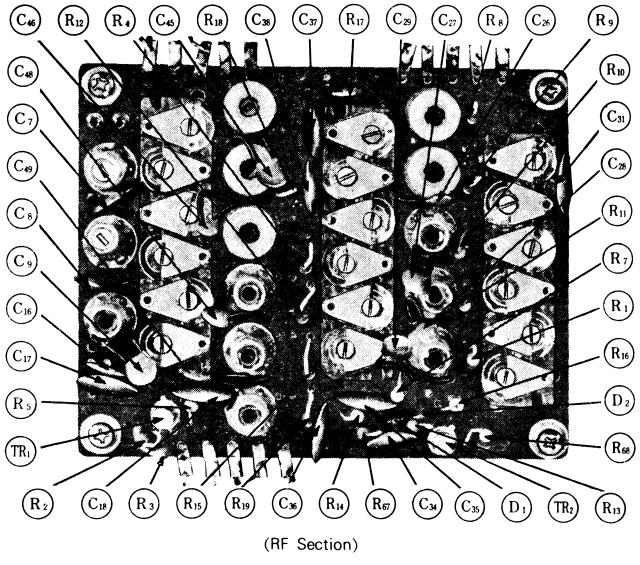

Fig. 13 Component View - Parts Identification.

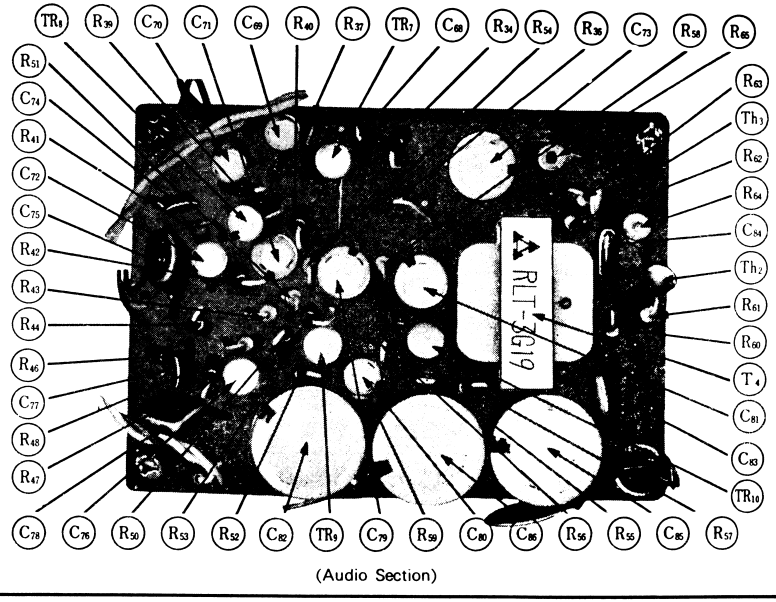

Fig. 15 Component View - Parts Identification.

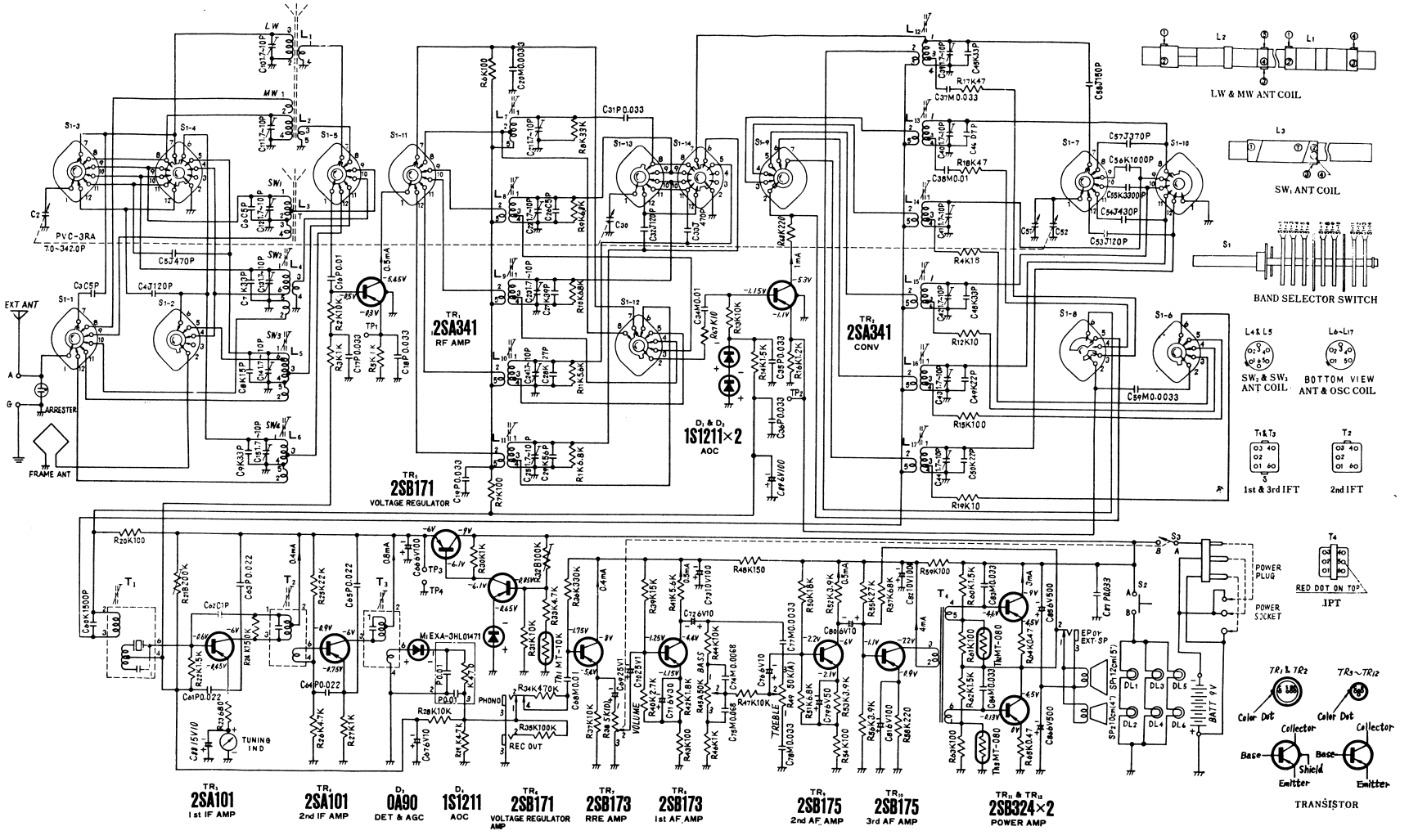

Notes:

1. S1-1~S1-14 : Band selector switch in "LW" position.
2. S2 : Dial light switch in "OFF" position.
3. S3 : Power source switch in "OFF" position.
4. DC Voltage measurements are taken with circuit tester 10KΩ/Volt from chassis Ground.
5. Capital letters (J,K,M,P,C,D) in the circuit diagram show allowable tolerances of resistors and capacitors as follows:
   J=±5% K=±10% P=+100% C=±0.25PF
   D=±0.5PF M=±20% − 0%
6. PF=pico farad=mmf
   μF=micro farad=MF
7. All resistor values in ohms (K=1000Ω).
8. All capacitor values in micro farads (P=μμF).

NATIONAL PANASONIC
Service Manual

6-BAND 12-TRANSISTOR PORTABLE RADIO

MODEL R-3000

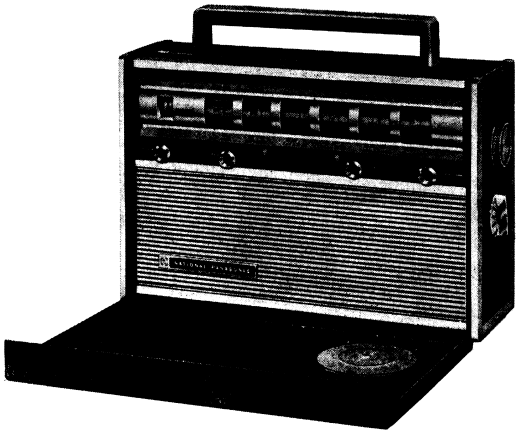

SPECIFICATIONS

Frequency Range:	LW	150~ 400kc/s (2000~ 750m)
	MW	520~1610kc/s (577~ 186m)
	SW1	1. 6~ 4. 5Mc/s (187~66.7m)
	SW2	4. 5~ 10 Mc/s (66.7~ 3 0m)
	SW3	10 ~ 20 Mc/s (3 0~ 1 5m)
	SW4	20 ~ 30 Mc/s (1 5~ 1 0m)
Intermediate Frequency:	455kc/s	
Transistors:	2SA341	RF Amplifier
	2SA341	Converter
	2SA101	1st IF Amplifier
	2SA101	2nd IF Amplifier
	2SB171	Voltage Regulator
	2SB171	Voltage Regulator Amplifier
	2SB173	Pre-Amplifier
	2SB173	1st AF Amplifier
	2SB175	2nd AF Amplifier
	2SB175	3rd AF Amplifier
	2SB324, 2SB324	Power Amplifier (push-pull)

Diodes:	1S1211, 1S1211 Operation Compensator
	0 A 9 0 Detector & AGC
	1S1211 Operation Compensator
Sensitivity:	LW 100μV/m for 50mW Output
	MW 50μV/m for 50mW Output
	SW1 30μV/m for 50mW Output
	SW2 30μV/m for 50mW Output
	SW3 30μV/m for 50mW Output
	SW4 30μV/m for 50mW Output
Power Output:	1.2W Undistorted
	2W Maximum
Batteries:	9V (Six "D" size flashlight batteries) (NATIONAL UM-1 or equivalent)
Speakers:	12cm (5") plus 10cm (4") PM Dynamic Speaker
Cabinet Dimensions:	370(Wide)×254(High)×129(Deep)mm (14⅝"×10"×5⅛")
Weight:	4.8kg. (10 lb. 9 oz.) Without Batteries

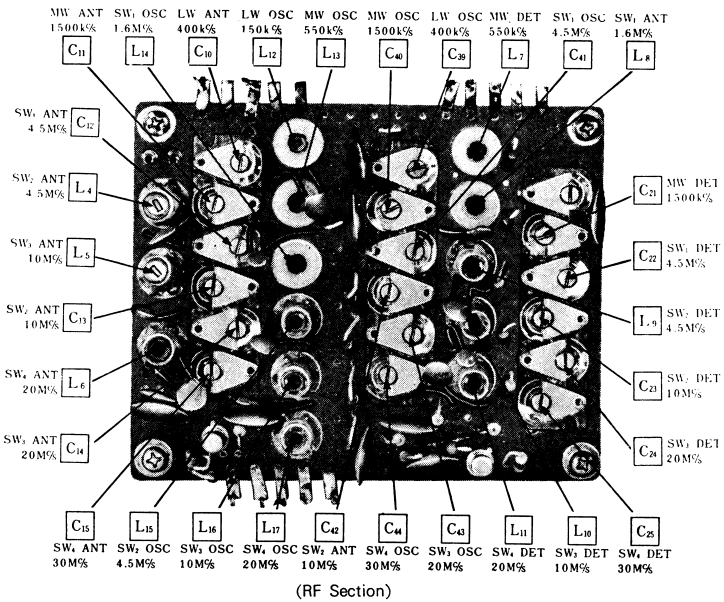

Fig. 12 Component View - Parts Identification, Alignment Points.

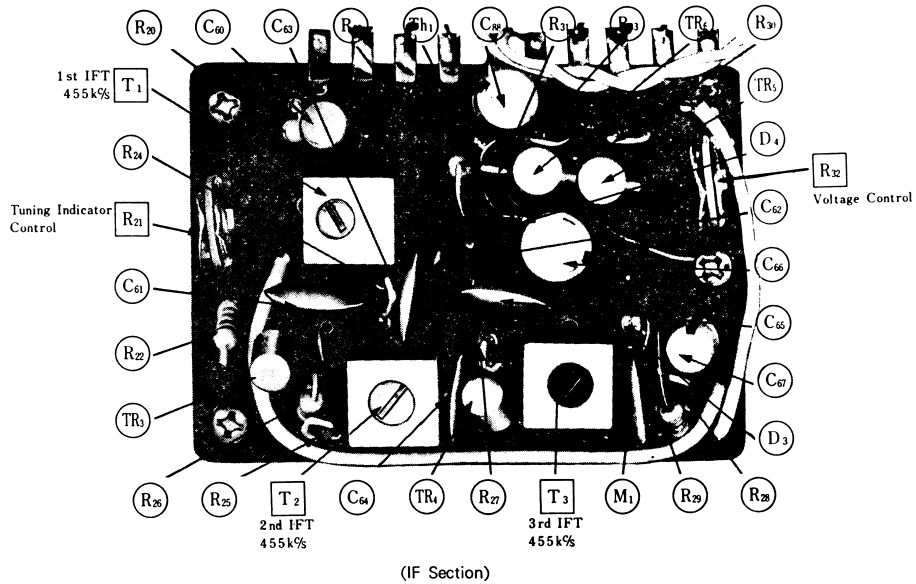

Fig. 14 Component View - Parts Identification, Alignment Points.

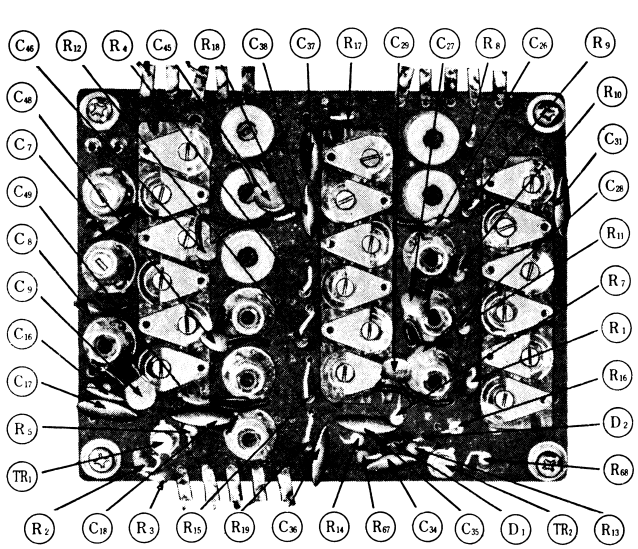

Fig. 13 Component View - Parts Identification.

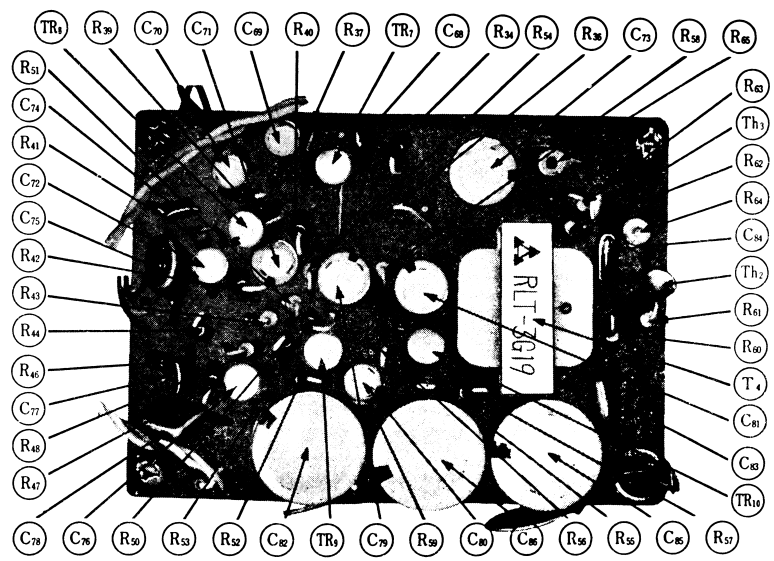

Fig. 15 Component View - Parts Identification.

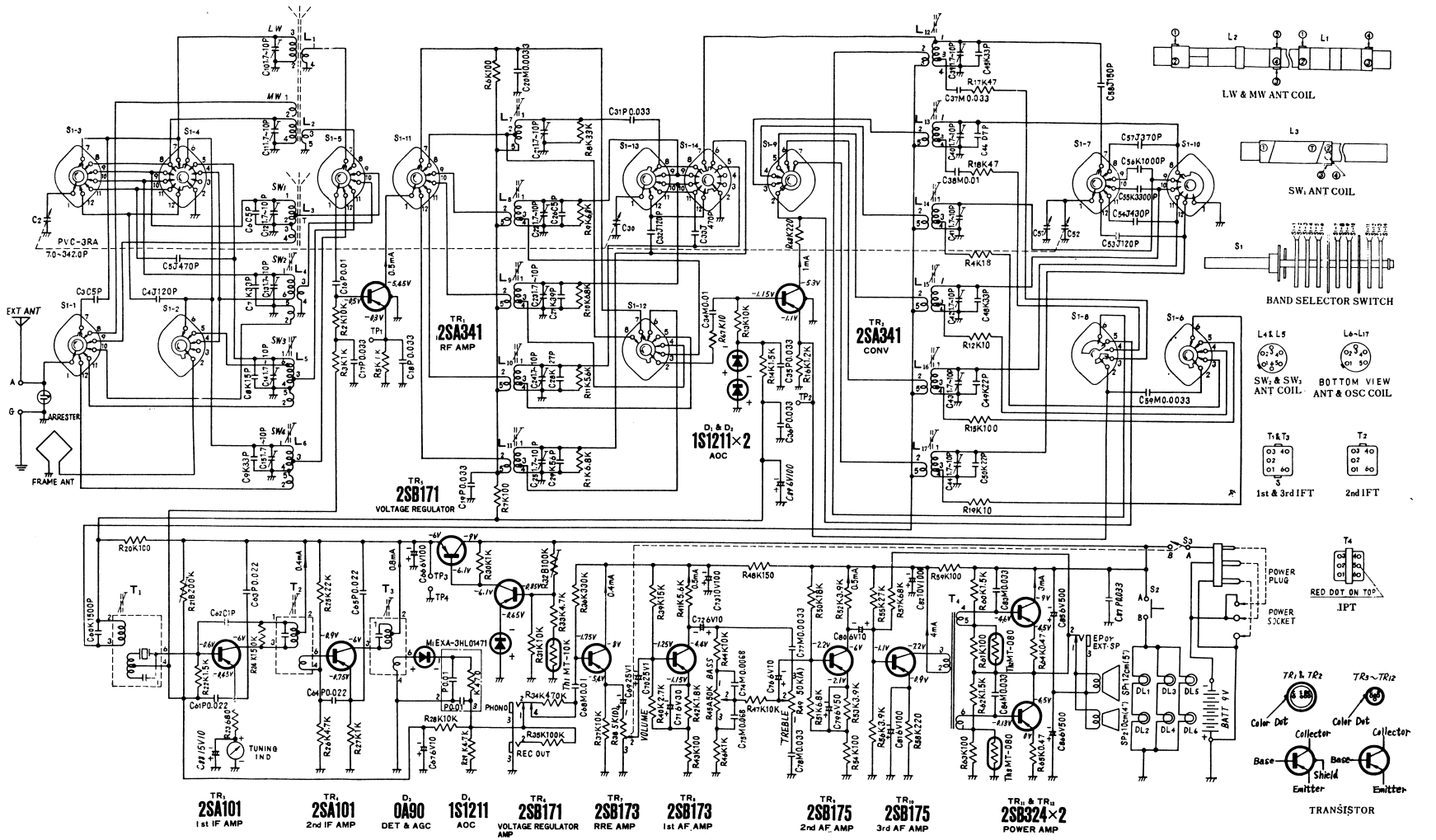

Notes:

1. S1-1~S1-14 : Band selector switch in "LW" position.
2. S2 : Dial light switch in "OFF" position.
3. S3 : Power source switch in "OFF" position.
4. DC Voltage measurements are taken with circuit tester 10KΩ/Volt from chassis Ground.
5. Capital letters (J,K,M,P,C,D) in the circuit diagram show allowable tolerances of resistors and capacitors as follows:
   J=±5% K=±10% P=+100% C=±0.25PF
   D=±0.5PF M=±20% − 0%
6. PF=pico farad=mmf
   μF=micro farad=MF
7. All resistor values in ohms (K=1000Ω).
8. All capacitor values in micro farads (P=μμF).

NATIONAL PANASONIC
Service Manual

6-BAND 12-TRANSISTOR PORTABLE RADIO

MODEL R-3000

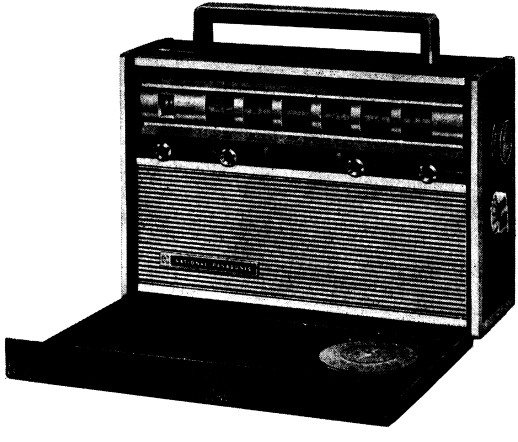

SPECIFICATIONS

Frequency Range:	LW	150~ 400kc/s (2000~ 750m)
	MW	520~1610kc/s (577~ 186m)
	SW_1	1. 6~ 4. 5Mc/s (187~66.7m)
	SW_2	4. 5~ 10 Mc/s (66.7~ 3 0m)
	SW_3	10 ~ 20 Mc/s (3 0~ 1 5m)
	SW_4	20 ~ 30 Mc/s (1 5~ 1 0m)
Intermediate Frequency:	455kc/s	
Transistors:	2SA341	RF Amplifier
	2SA341	Converter
	2SA101	1st IF Amplifier
	2SA101	2nd IF Amplifier
	2SB171	Voltage Regulator
	2SB171	Voltage Regulator Amplifier
	2SB173	Pre-Amplifier
	2SB173	1st AF Amplifier
	2SB175	2nd AF Amplifier
	2SB175	3rd AF Amplifier
	2SB324, 2SB324	Power Amplifier (push-pull)
Diodes:	1S1211, 1S1211	Operation Compensator
	0 A 9 0	Detector & AGC
	1S1211	Operation Compensator
Sensitivity:	LW	100μV/m for 50mW Output
	MW	50μV/m for 50mW Output
	SW_1	30μV/m for 50mW Output
	SW_2	30μV/m for 50mW Output
	SW_3	30μV/m for 50mW Output
	SW_4	30μV/m for 50mW Output
Power Output:	1.2W Undistorted	
	2W Maximum	
Batteries:	9V (Six "D" size flashlight batteries) (NATIONAL UM-1 or equivalent)	
Speakers:	12cm (5") plus 10cm (4") PM Dynamic Speaker	
Cabinet Dimensions:	370(Wide)×254(High)×129(Deep)mm (14⅝"×10"×5⅛")	
Weight:	4.8kg. (10 lb. 9 oz.) Without Batteries	