CAPACITORS

Circuit No.	Value	Description	Tol. ±	Rating V.DCW	Part Number
1	5-55pF	Trimmer - compression			4000-001-05
2	5-55pF	Trimmer - compression			4000-001-03
3	0.0047uF	Polystyrene	5%	50	4004-019-09
4	82pF	Polystyrene	10%	125	4004-020-06
5	4.7pF	Ceramic Disc	0.5pF	500	4008-042-02
6	10uF	Electrolytic		16	4005-007-36
7	0.47uF	Tantalum	20%	35	4005-056-04
8	0.47uF	Polyester	10%	100	4009-001-36
9	5-55pF	Trimmer - compression			4000-001-03
10	560pF	Polystyrene	10%		4004-026-03
11	680pF	Polystyrene	10%	125	4004-016-06
12	82pF	Polystyrene	10%	125	4004-020-06
13	0.001uF	Polystyrene	10%	50	4004-001-13
14	0.022uF	Ceramic Disc	10%	100	4008-010-07
15	0.022uF	Ceramic Disc	10%	100	4008-010-07
16	0.047uF	Polyester	10%	100	4009-001-36
17	220pF	Polystyrene	5%	125	4004-005-11
18	2.7pF	Ceramic Disc	0.25pF	500	4008-013-01
19	56pF	Polystyrene	10%	125	4004-025-05
20					
21	0.0068uF	Polyester	20%	16	4009-004-16
22	220pF	Polystyrene	5%	125	4004-005-11
23	0.047uF	Polyester	10%	100	4009-001-36
24	5.5-65pF	Trimmer			4000-057-01
25	0.047uF	Polyester	10%	100	4009-001-36
26	0.047uF	Polyester	10%	100	4009-001-36
27	0.047uF	Polyester	10%	100	4009-001-36
28	220pF	Polystyrene	5%	125	4004-005-11
29	4uF	Electrolytic		40	4005-045-02
30					
31	33uF	Electrolytic		16	4005-057-05
32	0.047uF	Polyester	10%	100	4009-001-36
33	0.1uF	Polyester (Board 203 only)	10%	100	4009-008-40
34	0.047uF	Polyester	10%	100	4009-001-36
35	0.047uF	Polyester	10%	100	4009-001-36
36	220pF	Polystyrene	5%	125	4004-005-11
37	0.0022uF	Polyester	10%	100	4009-002-20
38	0.0022uF	Polyester	10%	100	4009-002-20
39	0.001uF	Ceramic Disc		500	4008-040-03
40					
41	0.1uF	Polyester	10%	100	4009-008-40
42	0.033uF	Polyester	10%	100	4009-019-26
43	0.047uF	Polyester	10%	100	4009-001-36
	* (0.33uF)	Polyester	10%	100	4009-019-26
44	0.001uF	Ceramic Feed Thru			4008-040-08
45					
46	0.47uF	Polyester	10%	200	4009-003-29
	* (0.047uF)	Polyester	10%	100	4009-001-36
47	0.33uF	Polyester	10%	100	4009-019-26
	* (0.47uF)	Polyester	10%	200	4009-003-29
48	10uF	Electrolytic		16	4005-007-36
49	100pF	Ceramic Disc		500	4008-006-04
50	0.001uF	Ceramic Feed Thru			4008-040-08
51	4.7uF	Electrolytic		25	4005-055-07
52	0.1uF	Polyester	10%	160	4009-008-20
53	0.1uF	Polyester	10%	160	4009-008-20
54	640uF	Electrolytic		16	4005-046-05
55	0.047uF	Ceramic Disc		25	4008-057-04
56	0.047uF	Ceramic Disc		25	4008-057-04
57					
58	0.47uF	Ceramic Disc (Board 264 only)		25	4008-059-01
59	0.47uF	Polyester (Board 264 only)	10%	200	4009-003-29
60					

Values marked * are applicable to Board Type 203 only.

RESISTORS

Circuit No.	Value Ohms	Description	Tol. ±	Rating Watts	Part Number
61	1K	Carbon	10%	0.5	4022-008-01
62	150K	Carbon	10%	0.5	4022-038-01
63	4.7K	Carbon	10%	0.5	4022-005-01
64	220	Carbon	10%	0.5	4022-017-01
65	560	Carbon	10%	0.5	4022-010-01
66	1K	Carbon	10%	0.5	4022-008-01
67	2.7K	Carbon	10%	0.5	4022-043-01
68	220K	Carbon	10%	0.5	4022-063-01
69	1K	Carbon	10%	0.5	4022-008-01
70	4.7K	Carbon	10%	0.5	4022-005-01
71	8.2K	Carbon	10%	0.5	4022-027-02
72	5.6K	Carbon	10%	0.5	4022-022-02
73	10K	Carbon	10%	0.5	4022-004-01
74	1.5K	Carbon	10%	0.5	4022-007-01
75	150K	Carbon	10%	0.5	4022-038-01
	* (82K)	Carbon	10%	0.5	4022-037-01
76	18K	Carbon	10%	0.5	4022-018-01
	* (12K)	Carbon	10%	0.5	4022-029-01
77	220K	Carbon	10%	0.5	4022-063-01
78	15	Carbon	10%	0.5	4022-053-01
	* (22)	Carbon	10%	0.5	4022-033-01
79	1K	Carbon	10%	0.5	4022-008-01
80	6.8K	Carbon	10%	0.5	4022-002-02
81	1.5K	Carbon	10%	0.5	4022-007-01
82	68K	Carbon	10%	0.5	4022-048-01
83	10K	Carbon	10%	0.5	4022-004-01
84	4.7K	Carbon	10%	0.5	4022-005-01
85	10	Carbon	10%	0.5	4022-035-01
	* (15)	Carbon	10%	0.5	4022-053-01
86	390	Carbon	10%	0.5	4022-058-04
87	100	Carbon	10%	0.5	4022-062-01
88	1K	Carbon	10%	0.5	4022-008-01
89	4.7K	Carbon	10%	0.5	4022-005-01
	* (6.8K)	Carbon	10%	0.5	4022-002-02
90	680	Carbon	10%	0.5	4022-028-02
	* (470)	Carbon	10%	0.5	4022-016-01
91	4.7K	Carbon	10%	0.5	4022-005-01
92	47	Carbon	10%	0.5	4022-041-01
93	12K	Carbon	10%	0.5	4022-029-01
94	4.7K	Carbon	10%	0.5	4022-005-01
95	1K	Carbon	10%	0.5	4022-008-01
96	50K	Potentiometer - Volume control with 20K tap			4025-043-03
97	15K	Carbon	10%	0.5	4022-001-02
98	100K	Carbon	10%	0.5	4022-013-02
99	100K	Carbon	10%	0.5	4022-013-02
100	220	Potentiometer - preset			4025-034-04
101	2.2K	Carbon	10%	0.5	4022-021-02
102	680	Carbon	10%	0.5	4022-028-02
	* (1K)	Carbon	10%	0.5	4022-008-01
103	4.7K	Carbon	10%	0.5	4022-005-01
104	68	Carbon	10%	0.5	4022-024-01
105	1K	Carbon	10%	0.5	4022-008-01
106	680K	Carbon	10%	0.5	4022-055-01
	* (15K)	Carbon	10%	0.5	4022-001-02
107	150	Carbon	10%	0.5	4022-052-01
108	220	Carbon	10%	0.5	4022-017-01
109	47	Carbon	10%	0.5	4022-041-01
110	100	Carbon	10%	1	4022-062-02
111	47	Carbon	10%	0.5	4022-041-01
112	0.27	Wire Wound	10%	0.5	4024-007-02
113	0.27	Wire Wound	10%	0.5	4024-007-02
114	47	Carbon	10%	1	4022-041-03
115	50K	Potentiometer - Tone Control			4025-043-04
116					
117					
118					
119					
120					

Values marked * are applicable to Board Type 203 only.

MISCELLANEOUS

Circuit No.	Description	Part Number
121	Choke - 6.8uH	4048-032-01
122	Permeability Tuner Unit - complete	4050-054-05
	includes :-	
	Iron sleeve (3)	4065-037-01
	Iron sleeve (1) - oscillator	4065-038-01
	Iron core (4)	4065-039-02
	Coil assy. (1) complete	4036-053-01
	includes :	
	Aerial coil	4036-057-01
	Aerial transformer	4043-033-01
	R.F. coil	4036-057-01
	Oscillator transformer	4043-033-01
123	No. 1 I.F. Transformer - yellow/black	4044-032-01
124	No. 2 I.F. Transformer - yellow/green	4044-032-02
125	Oscillator shunt coil	4036-044-02
126	No. 3 I.F. Transformer - yellow/blue	4044-032-03
127	No. 4 I.F. Transformer - yellow/violet	4044-032-04
128		
129	Choke - iron cored	4048-025-05
130	Driver transformer	4042-125-02
131	Speaker transformer	4042-128-02
132	Choke - speaker filter	4048-043-02
133	Speaker - 15 ohm	4056-004-18
134		
135		
136	Transistor - Type BF195 - R.F. amp.	4128-262-01
	* (Type BF185)	4128-292-01
137	Transistor - Type BF194 - mixer	4128-261-01
	* (Type BF184)	4128-178-01
138	Transistor - Type BF194 - oscillator	4128-261-01
	* (Type BF184)	4128-178-01
139	Transistor - Type BF194 - I.F. amp.	4128-261-01
	* (Type BF184)	4128-178-01
140	Transistor - Type BF194 - I.F. amp.	4128-261-01
	* (Type BF184)	4128-178-01
141	Transistor - Type BC148 - voltage regulator	4128-251-01
142	Transistor - Type BC149 - audio amp.	4128-252-01
143	Transistor - Type BC149 - audio amp.	4128-252-01
144	Transistor - Type 2-OC927 (matched pair)- driver	4128-280-02
145	Transistor - Type AC125 - temp. compensation	4128-039-01
146	Transistor - Type 2-AD149 (matched pair)- audio output	4128-279-02
147	Diode - Type OA90 - detector	4127-077-01
148	Plug - speaker lead	7171-015-01
149	Aerial socket	7222-037-01
150	Noise suppression and ON/OFF switch	4059-250-02
151	Indicator lamp with leads - capless 12-16V	4068-020-01
152		
153	Fuse - 3 amp.	4071-010-02
154	Fuse - 3 amp. (fitted only on early models)	4071-010-02
155	Speaker socket	7222-033-11
156		

Transistor types marked * are applicable to Board 203

AERIAL TRIMMER ADJUSTMENT

When the receiver has been installed in the vehicle and the aerial has been connected, the aerial trimmer at the rear of the receiver must be readjusted. Raise the aerial to half of its fully extended height. Adjust the aerial trimmer knob for maximum output on a weak station near 1000 kHz (approximately centre of dial).
NOTE: If a fully retractable aerial is fitted, pull the large outer rod upward against stop in aerial base.

FULL BROADCAST ALIGNMENT

When an iron core or the tuning unit coil assembly has been replaced, or if station logging is outside limits, proceed as follows :

1. Connect i.f. attenuator to Test Pins B and C (resistor to Pin C).

2. Turn permeability tuner to high frequency travel stop and set all iron cores so that not less than 1/8" of shaft protrudes through front of receiver main frame.

3. Set signal generator frequency to 1625 kHz and connect generator output to receiver aerial socket with 65pF dummy aerial in series; adjust r.f. amplifier trimmer capacitor and both aerial trimmer capacitors for maximum output.

4. In the side of the tuning unit, at the opposite end to the tuning spindle, there are two slots; partly depress one of the push-buttons to release the clutch then place the spring fingers of the gauge into the rear slot, behind the tongue, as shown in diagram. The 0.39" section of gauge is to be in front of the tongue and against the projection at the front edge of the slot. Do not strain or tilt core carriage. Set signal generator frequency to 1000 kHz. On coil assembly, adjust ferrous cores of oscillator, r.f. amplifier, aerial transformer and aerial coil for maximum output. Remove gauge.

5. Set signal generator to 600 kHz. While rocking receiver tuning control through generator signal, adjust oscillator shunt coil for maximum output.

6. Turn permeability tuner to low frequency travel stop (cores full in). Tune signal generator for maximum receiver output. The lower tuning limit frequency should be between 510 kHz and 528 kHz.

7. Repeat Step 4.

8. Disconnect the i.f. attenuator and the signal generator.

9. Align pointer (see following paragraph).

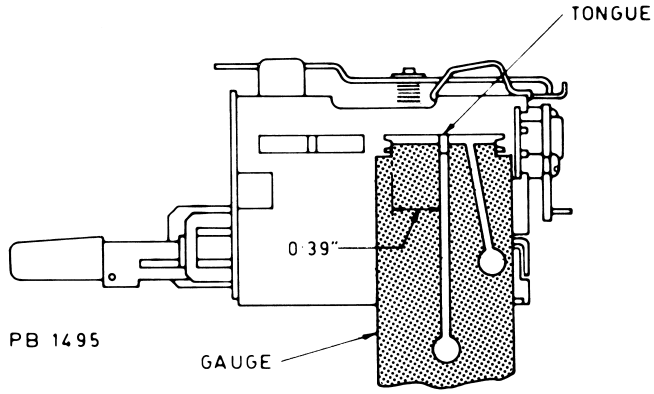

SETTING THE DIAL POINTER

1. Connect dummy aerial to receiver aerial socket.

2. Connect 20ft of aerial wire to dummy aerial.

3. Accurately tune the receiver to a station near 1000 kHz.

4. Insert the blade of a screwdriver in the slot at the rear of the pointer carriage arm; firmly turn slot to bend carriage arm until pointer is accurately aligned with station's position on dial.

5. Check dial logging and, if necessary, readjust pointer carriage arm.

MECHANICAL

Part Number	Description
7111-036-01	Heat sink (1) - output transistors
	Power transistor mounting hardware consists of :
7031-036-01	Bush (4) moulded
7120-049-01	Insulator (2) mica
7198-076-12	Screw (2) 3/8" x 1/8" Whit. cheese hd
7198-076-08	Screw (2) 5/8" x 1/8" Whit. cheese hd
7310-018-01	Nut (6) 1/8" Whit. special
7261-138-10	Washer (2) 1/8" internal
7111-007-01	Heat sink (1) - temp. comp. transistor
7120-026-01	Insulator (22) glass - transistor, diode and capacitor mount
7167-058-01	Pin (18) circuit board termination
7060-022-02	Contact (4) circuit board link
7215-133-01	Shield (1) tuner terminals
7055-412-01	Contact (2) tuner frame to can
4050-054-05	Permeability Tuner Unit complete includes :
7272-060-03	Thumbwheel assy. (1) switching
7169-743-01	Locating plate (1) switch thumbwheel
7201-526-14	Screw (2) 3/8" x No.4 Phillips csk. hd. - locating plate
7126-685-05	Indicator label (1) switch thumbwheel
7224-469-01	Spindle (1) thumbwheel
7294-136-01	Spacer (as required) 0.018" thick - spindle
7294-136-02	Spacer (as required) 0.010" thick - spindle
7261-236-03	Washer (as required) 0.010" spacing - spindle
7261-236-04	Washer (as required) 0.018" spacing - spindle
7011-009-01	Index ball (1) switch thumbwheel
7225-293-01	Leaf spring (1) index ball mount
7198-909-01	Screw (1) 3/16" x 1/8" Whit. special hd. - switch end of spindle
7262-008-01	Washer (1) 1/8" internal shakeproof - leaf spring mount
7198-126-20	Screw (1) 1/4" x 1/8" Whit. csk hd - dial end of spindle
7272-042-02	Thumbwheel and sprocket assy. (1) tuning
7076-009-01	Drive chain (1) tuning
7272-043-01	Idler wheel (2) chain tension
7324-054-01	Rubber 'O' ring (2) idler wheel
7294-135-01	Bush (2) idler wheel mount
7225-294-01	Spring clip (1) chain guard
7148-104-11	Nut (2) 3/16" Whit. - idler wheel mount
7056-012-02	Sprocket and clutch assembly (1)
7169-636-01	Plate (1) spacing - A.F. choke mount
7201-533-01	Screw (10) 1/4" x No.6 Phillips csk hd - various
7204-576-15	Screw (15) 1/4" x No.4 Phillips pan hd - various
7005-090-21	Dial background assy (1)
7005-566-01	Clip (1) indicator lamp mount
7091-027-02	Cover (1) background
7070-133-03	Dial reading (1)
7173-056-03	Pointer (1)
7201-526-16	Screw (2) 5/8" x No.4 Phillips csk hd - dial and background cover mount
7084-361-01	Escutcheon (1)
7201-027-11	Screw (4) 1/2" x No.6 Phillips hex. hd. - escutcheon mount
7261-142-04	Washer (4) flat steel 5/16" x 5/32" - escutcheon mount
7124-472-01	Knob (5) push-buttons
7309-079-01	Screw (2) special - switch mount
7198-909-01	Screw (2) 3/16" x 1/8" Whit. special hd - switch bracket mount
7262-008-01	Washer (1) 1/8" internal shakeproof - switch bracket mount
7148-302-11	Nut (1) 1/8" Whit. hex. - switch bracket mount
7188-061-01	Connecting rod (1) switch operating
7124-285-03	Knob (1) aerial trimmer
4078-080-02	Battery lead assy (1) complete consists of :
7185-021-01	Retainer (1) battery lead entry
7031-009-01	Bush (1) lead retainer
7086-088-05	Contact eyelet (1) lead retainer
7244-064-01	Spade connector (1)
1169-051-04	Lead (19") yellow
4077-174-02	Speaker lead assy (1) 24"

REPLACEMENT OF DRIVER TRANSISTORS

The push-pull driver transistors are a matched pair - i.e. they have been selected for the similarity of their characteristics; accordingly, they must be replaced as a pair and NOT as separate items.

A matched pair of OC927 transistors is supplied as 2-OC927, Part No. 4128-280-02.

REPLACEMENT OF OUTPUT TRANSISTORS

The push-pull output transistors are a matched pair - i.e. they have been selected for the similarity of their characteristics; accordingly, they must be replaced as a pair and NOT as separate items.

A matched pair of AD149 transistors is supplied as 2-AD149, Part No. 4128-279-02.

Before fitting output transistors to heat sink, first wipe clean the transistors, the mica washers and the heat sink, then smear a thin film of silicone compound (Part No. 1036-001-09) over the interfacing surfaces.

Fasten each transistor to the heat sink as follows :

1. Insert the two bushes in the screw holes from underside of heat sink.
2. Fit mica washer and transistor.
3. From top of heat sink insert 3/8" fixing screw in screw hole nearest to lid hinges; attach nut loosely.
4. From top of heat sink insert 5/8" fixing screw in second screw hole; fit spacing washer and nut.
5. Tighten nuts.

MEASUREMENT AND ADJUSTMENT OF OUTPUT TRANSISTOR COLLECTOR CURRENT

EQUIPMENT: Current meter - 0-1 amp. d.c. with a lead and clip assembly.

Power supply - 13.0 volts d.c.

CONDITIONS: Connect speaker to receiver socket adjacent to battery lead entry point. Disconnect link between Pins D and E. Connect current meter to Pins D (positive) and E (negative). No signal to be applied to aerial socket. Connect supply leads (negative to receiver chassis).

PROCEDURE:

1. Set Volume and Tone controls to minimum.
2. Switch receiver ON.
3. Adjust bias potentiometer (Circuit No. 100) to obtain a reading of 150 mA.

Note: It should not be necessary to make further adjustment of the bias unless a component in the audio frequency stages is changed.

CONNECTION OF A FADER CONTROL FOR USE WITH FRONT AND REAR SPEAKERS

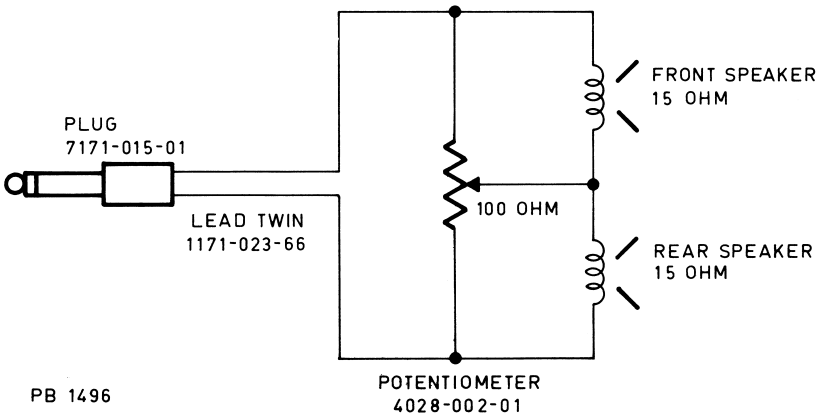

PB 1496

ALIGNMENT PROCEDURE

EQUIPMENT

Signal Generator - modulated at 400 Hz
Output Meter - 15 ohms impedance
Generator Series Capacitor - 0.1uF - Part No. 4009-008-20 - for aligning i.f. stages
I.F. Attenuator - Part No. 4121-014-01
Dummy Aerial - 65pF - Part No. 4121-009-01

Alignment Tools:

(a) Flat Metal Blade Type - Part No. 4121-001-01 - for adjusting i.f. transformers and oscillator shunt coil.

(b) Chisel Point Type - Part No. 4121-005-01 - for adjusting trimmer capacitors.

(c) Tuning Unit Iron Core Adjustor - Part No. 4121-008-01.

(d) Alignment Gauge - Part No. 4121-022-02 - for aligning tuner at 1000 kHz position.

CONDITIONS

Remove screws and hinge top lid upward.

Volume Control - maximum.

Tone Control - maximum.

Noise Filter - not selected.

Output Meter Connection - socket adjacent to battery lead entry point

Output Level - 50 milliwatts (speaker disconnected).

Supply Voltage - 12 volts d.c.

Polarity - Connect supply positive line to receiver lead. Connect supply negative line to receiver chassis.

I.F. TRANSFORMER ALIGNMENT

Turn tuning control until cores of tuner unit are out of coil windings. Insert 0.1uF capacitor in series with generator "hot" lead. Proceed as follows :

STEP	GENERATOR CONNECTION	GENERATOR FREQUENCY	INSTRUCTIONS
1	To Test Pin A (base of mixer stage); return lead to Test Pin C (negative line)	455 kHz	Adjust iron core of 4th i.f. transformer for maximum output.
2	As Step 1.	455 kHz	Adjust iron core of 3rd i.f. transformer for maximum output.
3	As Step 1.	455 kHz	Adjust iron core of 2nd i.f. transformer for maximum output.
4	As Step 1.	455 kHz	Adjust iron core of 1st i.f. transformer for maximum output.
5	Repeat Steps 3 and 4 until maximum output is obtained.		

BROADCAST ALIGNMENT

If the receiver logging is satisfactory, the signal circuits may be aligned as follows :

1. Connect attenuator to Test Pins B and C (resistor to Pin C).
2. Set signal generator frequency to 1000 kHz and connect generator output to receiver aerial socket with 65pF dummy aerial in series.
3. Tune receiver so that pointer approximately corresponds with dial reading of 1000 kHz; fine-tune receiver to obtain maximum output at signal generator frequency.
4. Adjust r.f. amplifier trimmer capacitor and both aerial trimmer capacitors for maximum output.

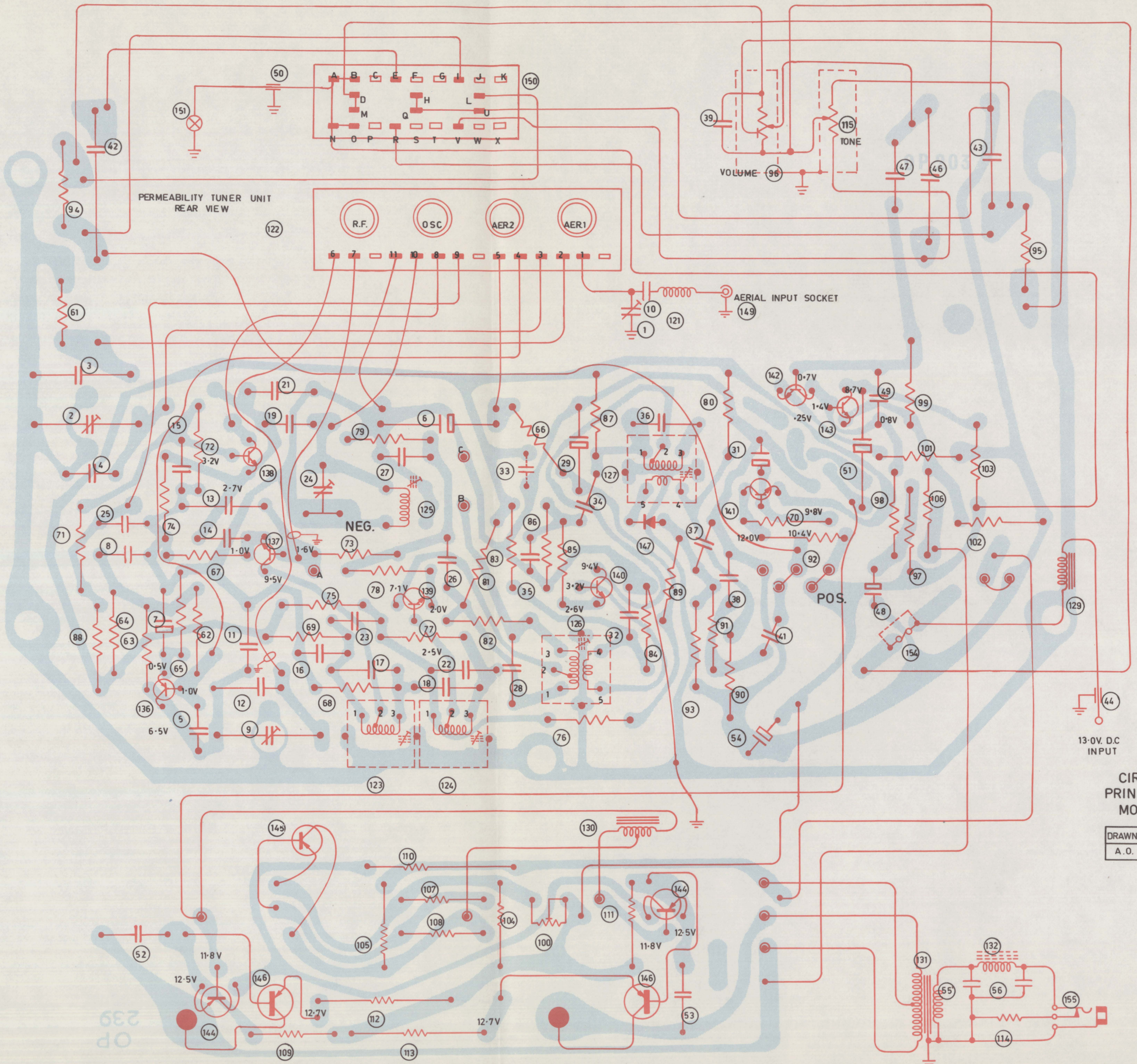

CIRCUIT BOARD
PRINTED WIRING SIDE
MODEL PN-C27AE

DRAWN	DATE	CH'KD	APP'D
A.O.	11-8-71		

USE THIS DIAGRAM
IF PRINTED BOARD
TYPE 203 FITTED

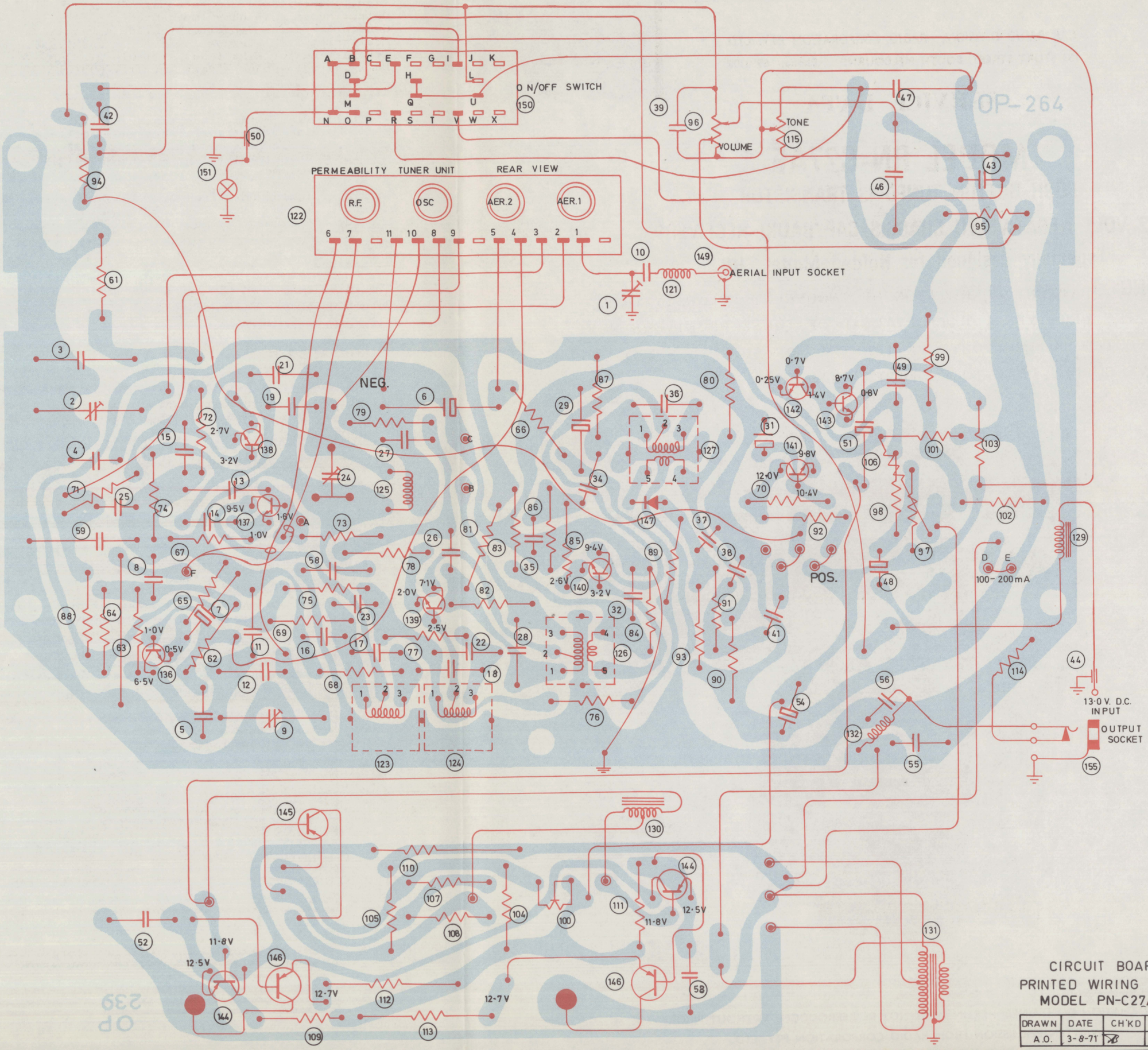

USE THIS DIAGRAM
IF PRINTED BOARD
TYPE 264 FITTED

CIRCUIT BOARD
PRINTED WIRING SIDE
MODEL PN-C27AE

DRAWN	DATE	CH'KD	APP'D
A.O.	3-8-71		

PB1716

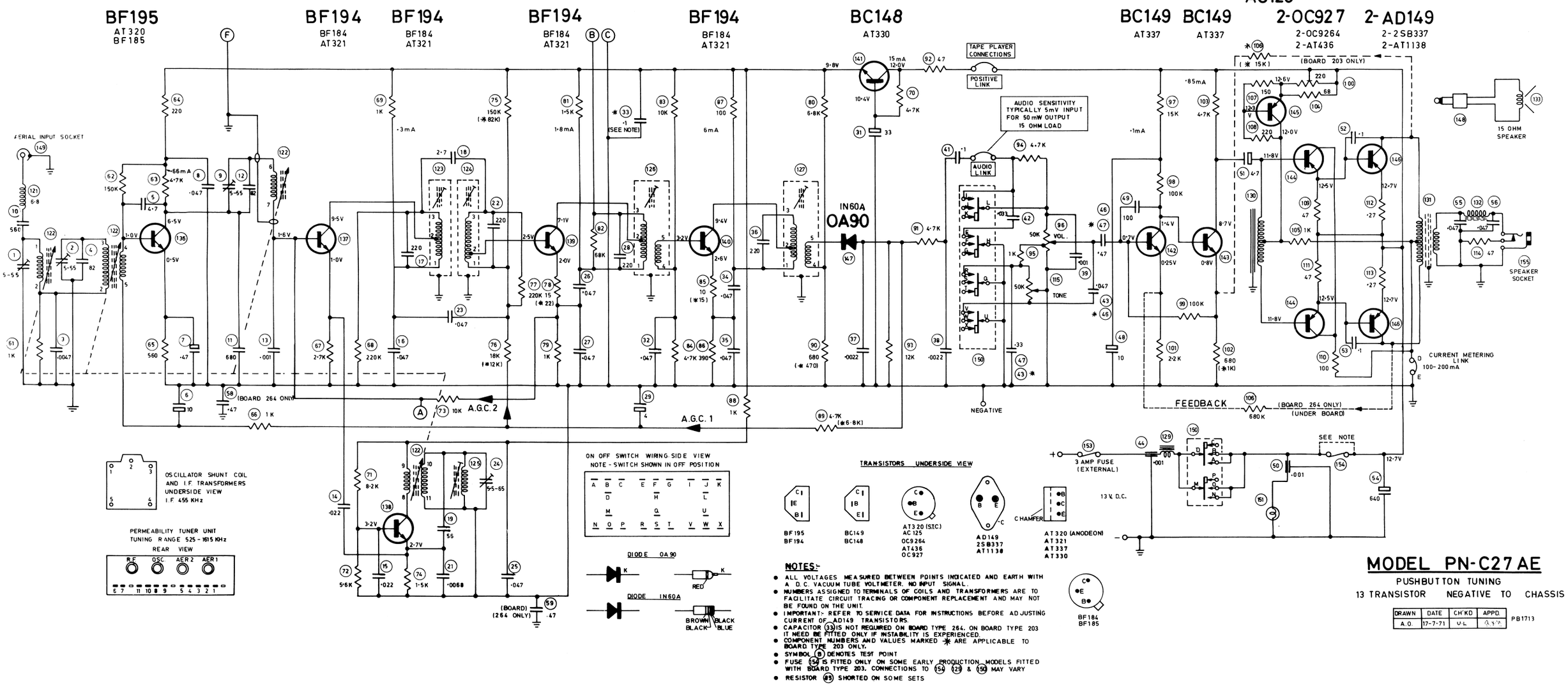

Tuning Range:	525 - 1615 kHz
Intermediate Frequency:	455 kHz
Supply Voltage:	13 volts d.c.
Current Consumption:	250 milliamps
Power Output:	8 watts
Speaker Impedance:	15 ohms

SETTING THE PUSH BUTTONS

1. Unlock the push buttons by pulling outward.
2. Tune a desired station with the manual tuning knob.
3. Press one of the push buttons fully in.
4. Repeat the above procedure to set remaining four buttons.

AIR CHIEF

CAR RADIO DIVISION, RADIO CORPORATION PTY. LTD.
153 STURT STREET, SOUTH MELBOURNE Phone: 69 0300

SERVICE DATA

MODEL PN-C27AE

PUSH BUTTON TUNED 13 TRANSISTOR

12 VOLT NEGATIVE TO CHASSIS CAR RADIO RECEIVER

Especially designed for Holden Model "HQ"

WARNING BATTERY CONNECTION OF INCORRECT POLARITY WILL DAMAGE THE RECEIVER. BATTERY LEAD OF THESE RECEIVERS MUST BE CONNECTED TO THE POSITIVE TERMINAL OF SUPPLY. CONNECT NEGATIVE SUPPLY LEAD TO RECEIVER CHASSIS.

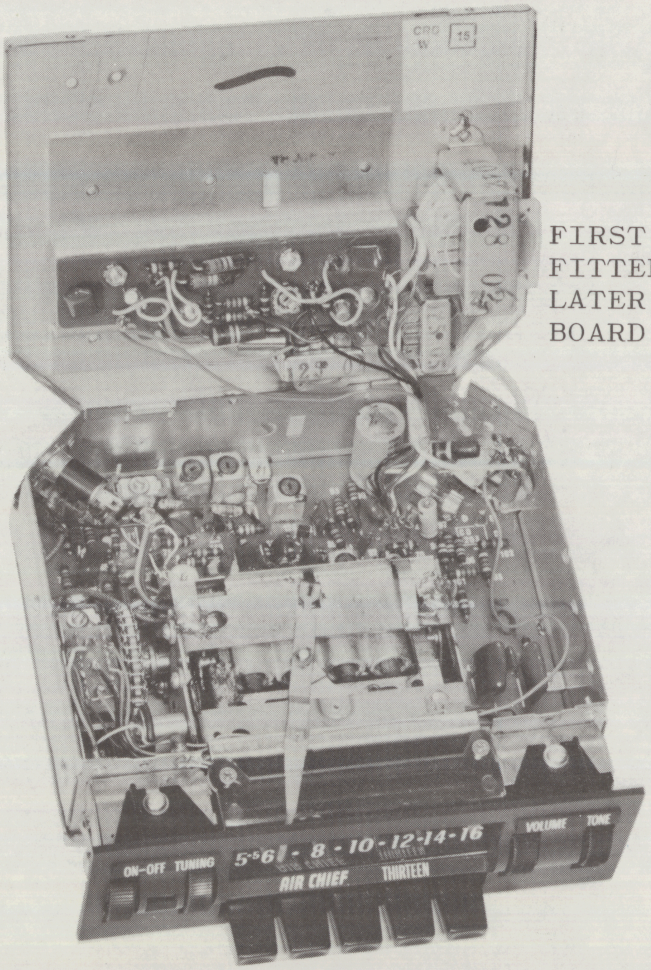

NOTE

FIRST PRODUCTION MODELS FITTED WITH BOARD TYPE 203; LATER MODELS FITTED WITH BOARD TYPE 264.