Clarion

SERVICE MANUAL

Closer Relations through "CLARION SERVICE MANUAL"

MODEL PE-822A

Fabricant: CLARION CO., LTD./Exportations: CLARION SHOJI CO., LTD.
3, Kojimachi 5-chome, Chiyoda-ku, Tokyo, 102 Japan Tel.: (265) 2931 Telex: J22908, J22152 CLARISHO
Succursales outre-mer:
CLARION SHOJI (EUROPA) G.M.B.H. 2000 Hamburg 76, Schöne Aussicht 35, West Germany Tel.: 220-7667 Telex: 41214969
CLARION SHOJI CO., LTD. (U.S.A.) 5500 Rosecrans Ave., Lawndale, Calif., 90260 U.S.A. Tel.: 213-973-1100 Telex: 66-4447
CLARION CORPORATION OF AMERICA 5500 Rosecrans Ave., Lawndale, Calif., 90260 U.S.A. Tel.: 213-973-1100 Telex: 66-4447
CLARION CORPORATION OF AMERICA, EASTERN DIVISION 421 North Midland Ave., Saddle Brook, N.J. 07662 U.S.A. Tel.: 201-791-1200 Telex: 13805
CLARION (MALAYSIA) SDN. BHD. 9 1/2 m.s. Bayan Lepas, Penang, Malaysia Tel.: 897-206, 897-334 Telex: PG 255 (Penang)
CLARION DO BRASIL INDUSTRIA E COMERCIO LTDA. Caixa Postal 5033, Sao Paulo, Brasil Tel.: 32-5161 Telex: 3821123
CLARION (HONG KONG) CO., LTD. 225 Ping Chau Gallery, Ocean Terminal, Kowloon, H.K. Tel.: 3-675785 Telex: HK4922

* SPECIFICATION

Reproduceion ction:	4 track, 2 channel, 2 program stereo cassette tape player (Monaural tape playable)
Tape speed:	4.75 cm/sec
Wow and flutter:	Better than 0.44%
S/N ratio:	More than 40 dB
Corss talk:	More than 30 dB (for adjacent channel) More than 40 dB (for adjacent track)
Reproduction frequency:	50 to 10,000Hz
Automatic change time:	With in 4 sec
F.F and REW time:	With in 90 sec (C-60)
Power output:	More than 4.0W x 2 (for 10% distortion) More than 6.0W x 2 (for max, volume)
Output impedance:	4Ω x 2
Power supply voltage:	DC 13.2V(10.8~15.6V) Negative ground
Power consumption:	Less than 1.5A (at max. output) Less than 4.5A (at plunger operated)
Weight:	1.6kg (3.5lb)
Dimensions:	Width 140 mm (5.5") Height 44 mm (1.73") Depth 150 mm (5.9")

Semiconductors: 4ICs, 4 transistors and 3 diodes

Pre-amplifier		
	051-0020-00 ~ 04 (TA-7120)	x 2
Power amplifier		
	051-0055-04 ~ 00 (TA-7205P)	x 2
Automatic change section		
	102-0373-00 (2SC373)	x 1
	102-0735-00 (2SC735)	x 1
	102-0235-00 (2SC235)	x 1
	106-0021-00 (2SH21)	x 1
	001-0112-00 (1S1588)	x 2
	001-0077-00 (10D-4)	x 1

Printed in Japan 298-1792-00 PE-822A

* COMPONENTS VIEW:

	Main unit	1
281-0419-00	Warranty card	
280-3347-00	Owner's guide	1
852-4649-00	Extension lead	1

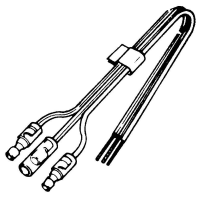

921-6245-00	Parts bag	1

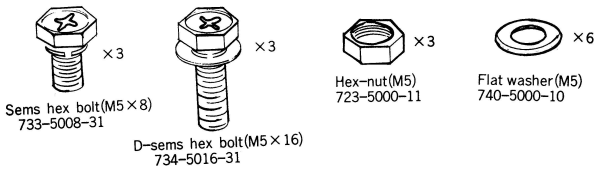

300-5074-00	Mounting bracket	1

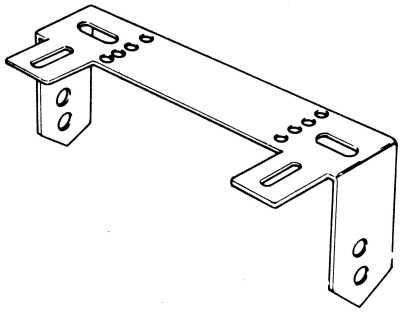

300-4976-00	Mounting bracket	1

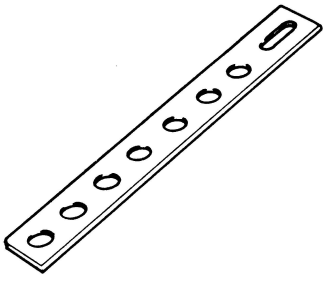

* FEATURES

○ **Ultra thin cassette stereo**
This is an auto reverse type cassette stereo having perfect function and improved operability. Moreover, since it is ultra thin, it can be mounted at any place. Corresponds to snap-in system.

○ **High grade design based on black color**
Simple and deliberate design based on black color well suited to the interior style of a car.

○ **Auto reverse circuit, tape coiling preventing device**

1. Since auto reverse system is employed, when the tape reaches its end the program is automatically switched and repeated reproduction is possible.
2. Program chan be changed during playback by depressing the PROGRAM button.

○ **Auto eject**
When the auto eject switch is ON: Automatic eject is accomplished when the tape completes one round.
When the auto eject switch is OFF: Auto reverse reproduction is accomplished.

○ **Program indicator**
Since a program indicator is provided, program being played back is indicated.

○ **Auto loudness circuit**
Since a unique auto loudness circuit is built-in, the tonal characteristic of the sound is quite close to the characteristic of human ear.
Therefore, the quality of sound is further improved.

○ **Fast forward, rewind (FF, REW) mechanism**
FF, REW mechanism is provided with lock.
A new system is used in which automatic eject is accomplished when FF, REW is completed.

⊙ ELECTRICAL SECTION

* METHOD OF ADJUSTMENT

○ **Adjustment of gain**

When there is defference between left and right outputs (levels) or difference in the outputs is felt when the program is switched, adjustment can be made by means of the gain control. (Only for L channel).

When the control is turned clockwise, the output increases moreover, when the output is exceedingly large or small, it can be adjusted by changing the gain of the R channel by shorting the pattern of the PB (099-4517-04). (Refer to Fig. 1)

The adjustment is possible in **3 steps** (Table 1). After this the gain of L channel is **adjusted by** means of the Gain control. (Adjust to 2 ~ 4V **on -15VU** tape with Master Vol. Max.)

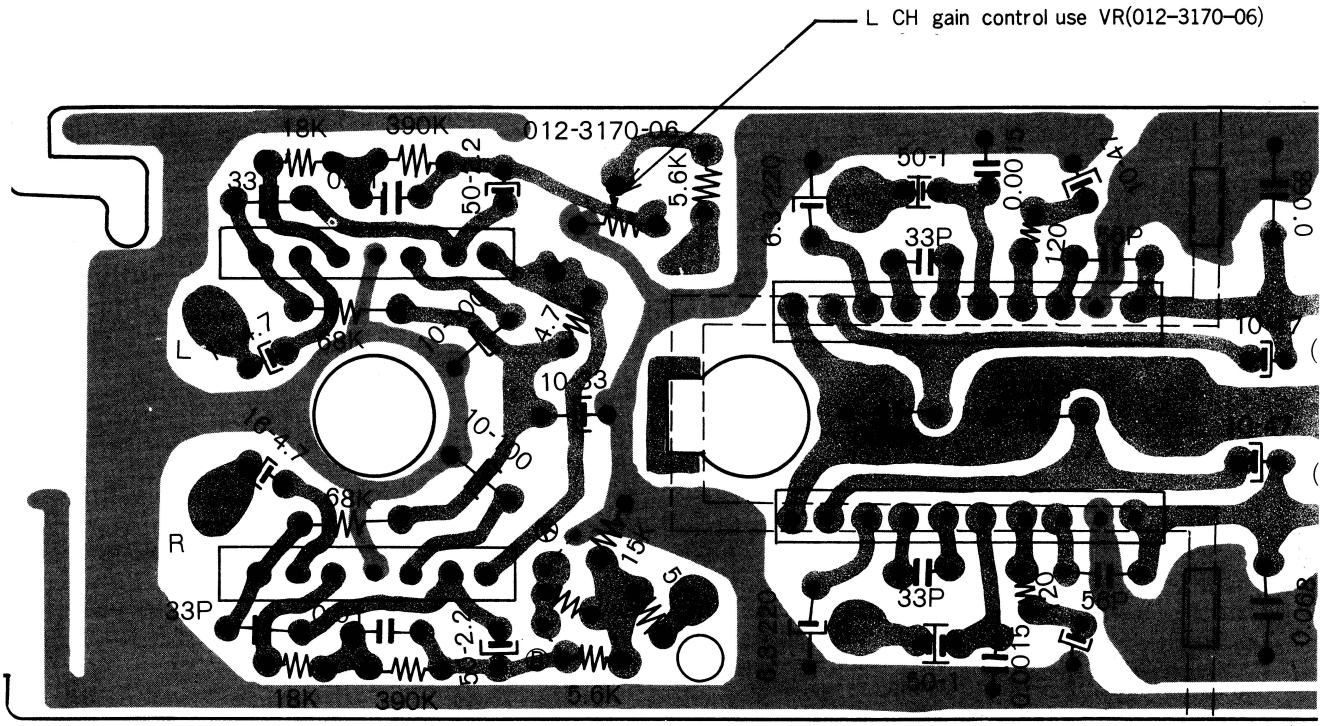

Fig. 1

(R ch adjustment method) Table 1

Pattern adjustment point / Gain	A	B
Small gain	short	(open)
Medium gain	(open)	(open)
Large gain	(open)	short

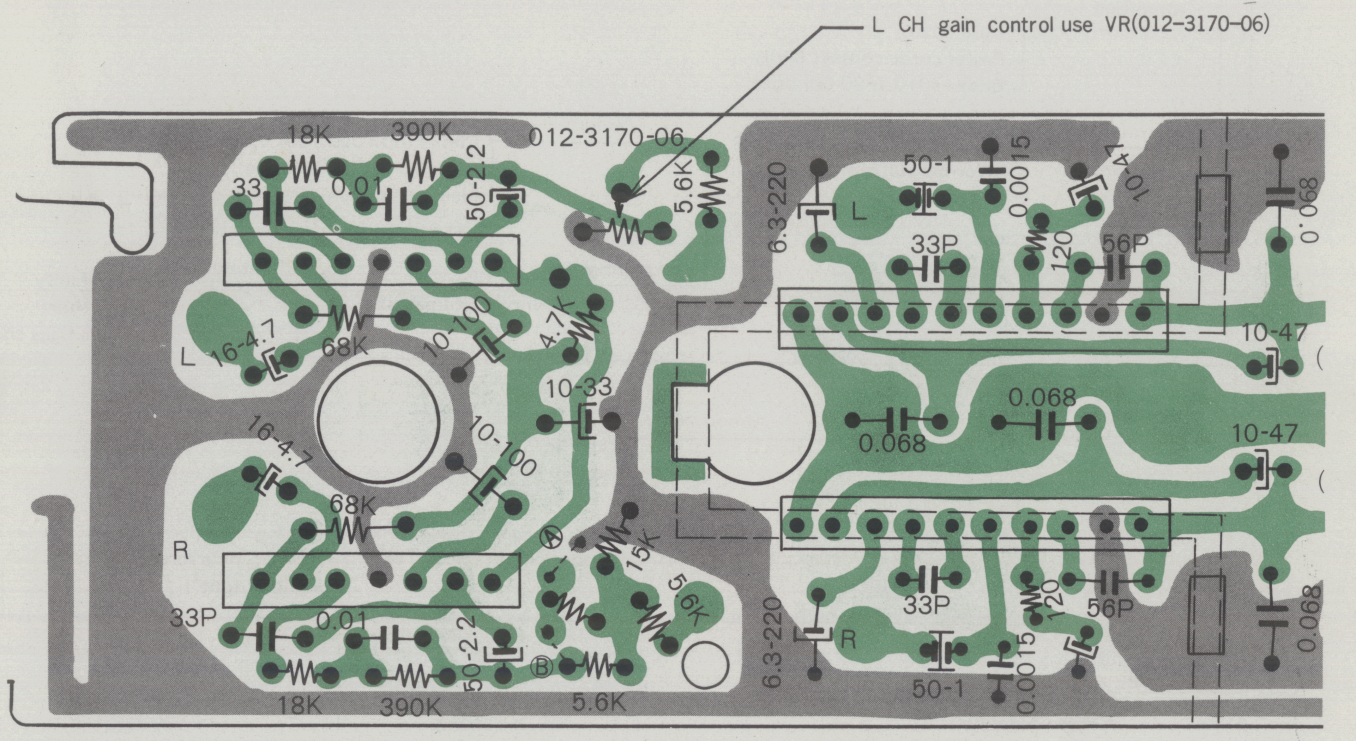
L CH gain control use VR(012-3170-06)
012-3170-06
18K
390K
33
0.01
50-2.2
5.6K
6.3-220
L
50-1
0.0015
10-4.7
0.068
33P
120
56P
16-4.7
68K
10-100
4.7K
10-33
10-47
0.068
0.068
10-47
R
15K
5.6K
33P
0.01
50-2.2
Ⓐ
Ⓑ
18K
390K
5.6K
6.3-220
R
33P
120
56P
50-1
0.0015
0.068

Fig. 1

* TROUBLESHOOTING (Refer to circuit diagram, PWB diagram)

No sound — (Power supply circuit check) ➡ Switch on power
- Abnormal ➡ Power shorted — C_{303}, C_{304}, C_{305}, C_{404} short
- Normal — Check CP_1 (Normal voltage 13.2V) ➡
  - Abnormal — Fuse open / Power corde contact faulty / Choke (010-1680-00) open
  - Normal — Check CP_2 (Normal voltage 13.2V) ➡
    - Abnormal — Choke (007-0592-00) open / SW (013-3266-00) faulty / Mechanism faulty (refer to mechanism section)
    - Normal — Check CP_3 (Normal voltage 8V) ➡
      - Abnormal — R_{33} faulty / R_{32} short / C_{301}, C_{302} short
      - Normal — Check CP_4 (Normal voltage 7V) ➡
        - Abnormal — R_{301} open / C_{301} short
        - Normal — (Output circuit check) ➡ Touch OP_6 by a screw driver, etc (Is audio output?)
          - Abnormal — VR printed board short or lead open / Preamp. faulty (refer to a different section)
          - Normal — Speaker connection
            - Speaker lead contact faulty / Speaker voice coil open
            - (IC section voltage check) ➡
              - Abnormal — IC faulty / Related components faulty

Pre-amp. section check (Disconnect the head lead from the pattern) — Touch the input with finger
- (Sound is produced) — Head faulty
- (No sound) ➡ Check voltage at various parts of the IC
  - Abnormal — IC faulty / Related components faulty
  - Normal — (Touch CP_6 by a screw driver, etc)
    - Abnormal — VR_1 soldering faulty or open

Sound volume is low

- (Power supply circuit check) ➡ CP_3 voltage check
  - Abnormal
    - R_{303} resistance high
    - R_{302} resistance high
    - C_{302} leaking due to deterioration
  - Normal ➡ CP_4 voltage check
    - Abnormal
      - R_{301} resistance high
      - C_{301} leaking due to deterioration
    - Normal
      - (Output circuit check) ➡ Interchange input Lch and Rch of the output circuit
        - Is the low volume side changed to the other?
          - Does not change
            - R_{108}, R_{208} resistance high
          - Changes
            - (Pre-amp. section check) ➡ VR_1, $RX_1 \sim_3$ adjustment check
              - Abnormal
                - VR_1, $RX_1 \sim_3$ adjustment faulty
              - Normal
                - C_{103}, C_{203} capacity down due to deterioration

Sound is distorted

- C_{111}, C_{211}, C_{112}, C_{212}, C_{117}, C_{217} deteriorated, polarity reverse
- IC faulty or deteriorated

Oscillates

- (Leads arrangement faulty)
  - Head leads arrangement
  - Ground leads arrangement
  - Grounding screws not properly tightened
- (Oscillation preventing capacitors faulty)
  - C_{113}, C_{213}, C_{115}, C_{215}, C_{116}, C_{216}, C_{102}, C_{202} open, capacitor down

Crosstalk is worse

- Grounding screws not properly tightened
- Ground leads open

Noise is large

- (Coupling capacitor faulty)
  - C_{101}, C_{201}, C_{105}, C_{205}, C_{109}, C_{209} capacity down
- (Motor circuit)
  - Motor faulty
  - C_{305} capacity down

Motor does not operate

- Check CP_6 (Normal voltage 13.2V) ➡
  - Abnormal
    - R_{305} open
    - Power supply circuit (previous section)
  - Normal
    - Refer to mechanism section

✻ Concerning autoreverse, refer to the mechanism section

⊙ MECHANISM SECTION

* METHOD OF ADJUSTING TAPE MECHANISM

1. Adjusting head azimuth (See Fig. 1)

Incorrect head azimuth with respect to the tape is one of the causes of bad quality of sound and crosstalk.

When the head azimuth is not correct, adjust according to the following procedure.

1) Play the test tape 333Hz–15VU, set the volume control to Max. and obtain balance by the Balance control.
2) Next play the test tape 6.3KHz–10VU and adjust by turning the head azimuth adjusting screw so that the output level becomes close to maximum in both forward and reverse directions.

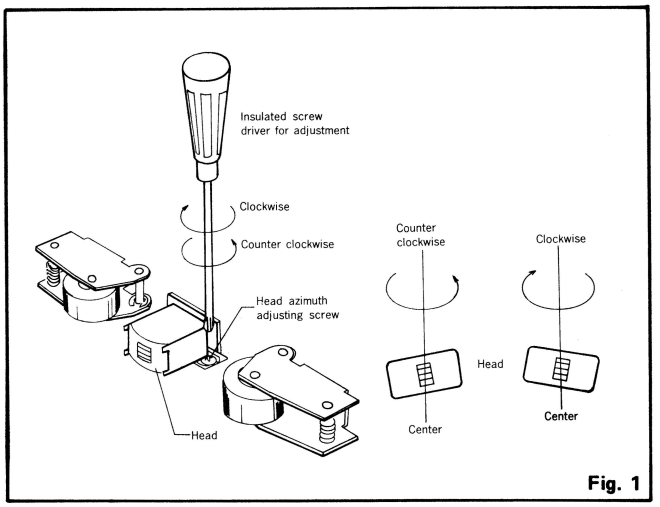

Fig. 1

2. Adjusting pinch roller pressure (See Fig.2)

1) Measuring method

With the mechanism in playback state, pull the pin attached to the pinch roller mount in the direction shown by arrow in the Fig. using a tension gauge and measure the tension when the pinch roller separates from the capstan. If the tension at this time is found to be 220g ~ 280g, it is normal.

2) Adjusting method

Adjust by bending the spring as shown in the Fig. using radio use pincers.

If adjustment is not possible, replace the springs 750-1684-00, 750-1685-00.

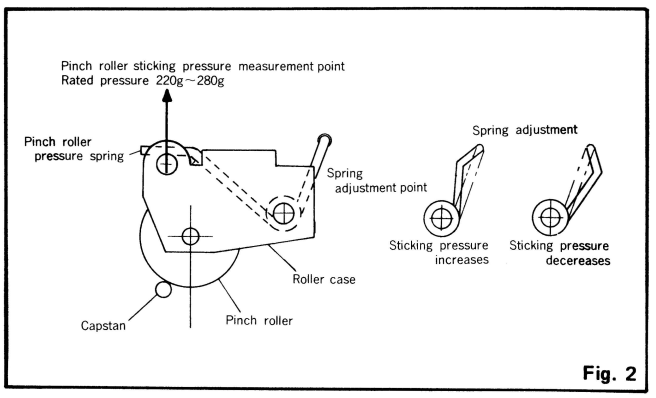

Fig. 2

3. Adjusting head selector switch 013-3066-00 (See Fig.3)

When faults like crosstalk, no sound on one channel, simultaneous lighting of (tape) running indicator lamps, etc. are found on reverse drive to be caused by faulty switch contact, adjust by loosening the fixing screws of the printed board on which the switch is mounted and shifting the printed board to the left or right.

After completing the adjustment, fix the screws by screw lock.

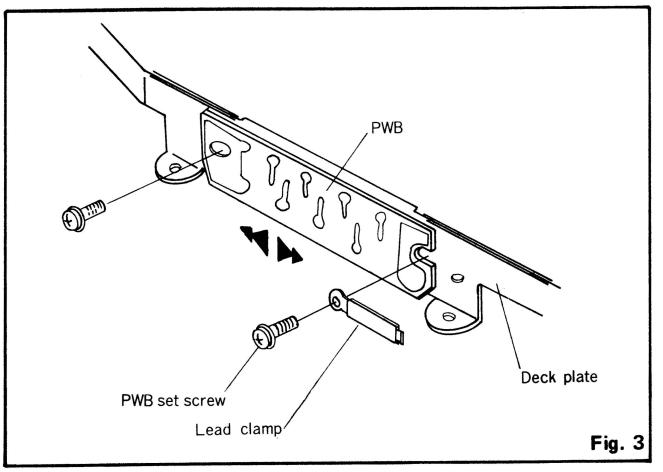

Fig. 3

4. Adjusting the plunger (See Fig.4)

When faulty switching operation is found to be caused by faulty plunger position, this can be adjusted by loosening the two screws with which the plunger is mounted and shifting the plunger forward or backward. After adjusting, check the switching operation in both forward and reverse directions and fix the screws by screw lock.

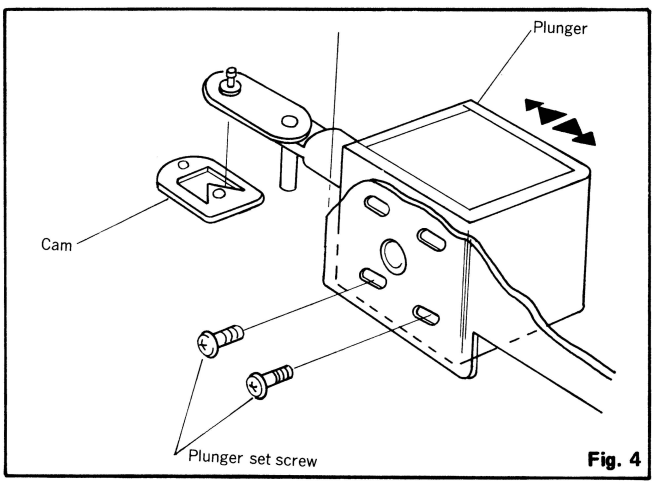

Fig. 4

5. Method of replacing motor (See Fig.5)

1) Disconnect the power cord of the motor from the printed board using a soldering iron.
2) Remove the 3 screws with which the motor is fixed.
3) Remove the fixing screw of motor pulley and take off the pulley.

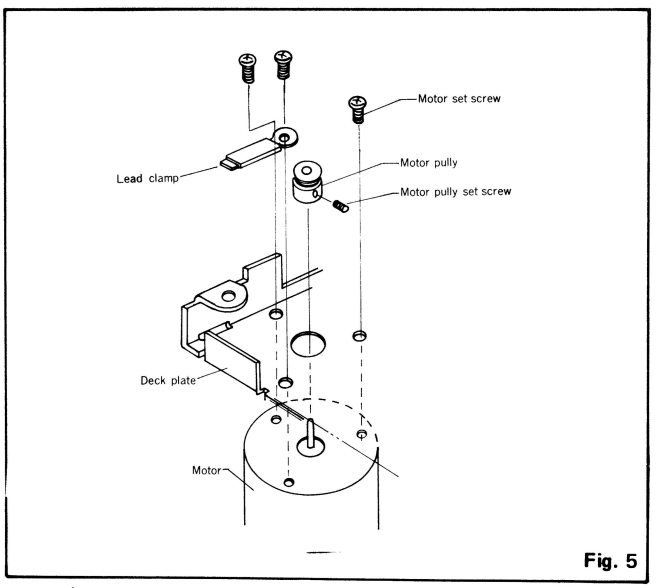

Fig. 5

NOTE) 1. After replacing the motor, fix the screws with screw lock.
2. Never use any other mounting screw excent 732-2604-11

6. Method of Removing Parts Concerning Pack Guide Ass'y

6-1 Removing side pannel Ass'y (960-2933-00)(See Fig.6)

1) Remove the spring (750-1680-00)
2) Remove the two machine screws (714-2603-81)
3) **Remove the side pannel Ass'y (960-2933-00)**

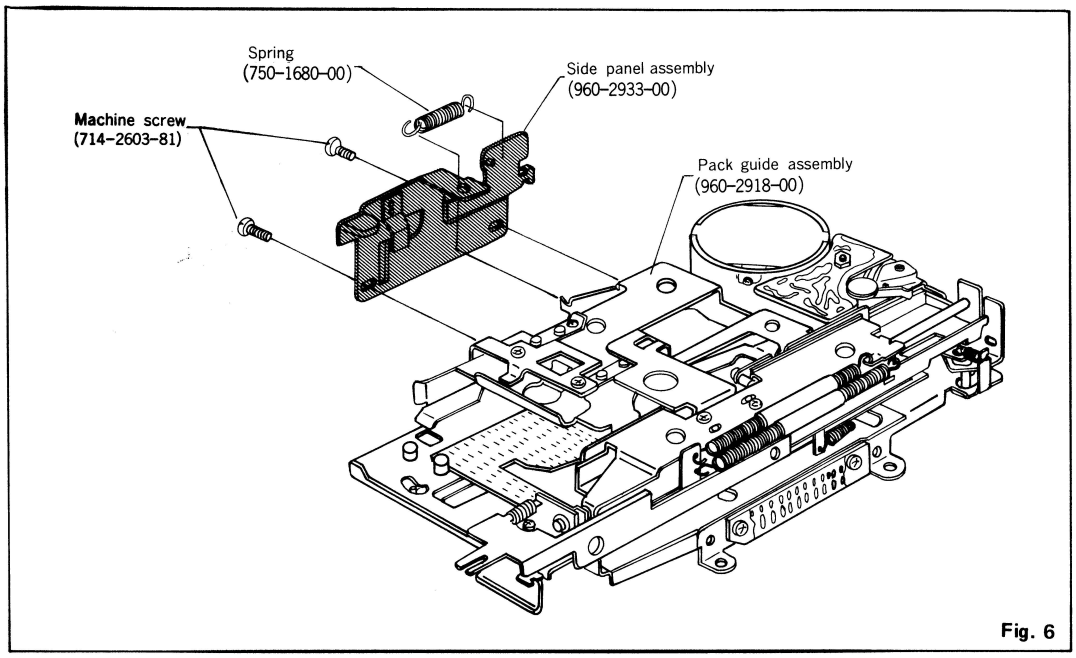

Fig. 6

6-2 Method of Removing Pack Guide Ass'y (960-2918-00) (See Fig.7, 8)

1) Turn the pack guide Ass'y (960-2918-00) at right angles (in the same horizontal) as shown in Fig. 7.
2) Next turn the pack guide Ass'y (960-2918-00) in the vertical direction and take off through the head slot of the reel bade Ass'y (960-2926-00) (See Fig.7, 8)

NOTE) At this time be careful not to scratch the front surface of the head.

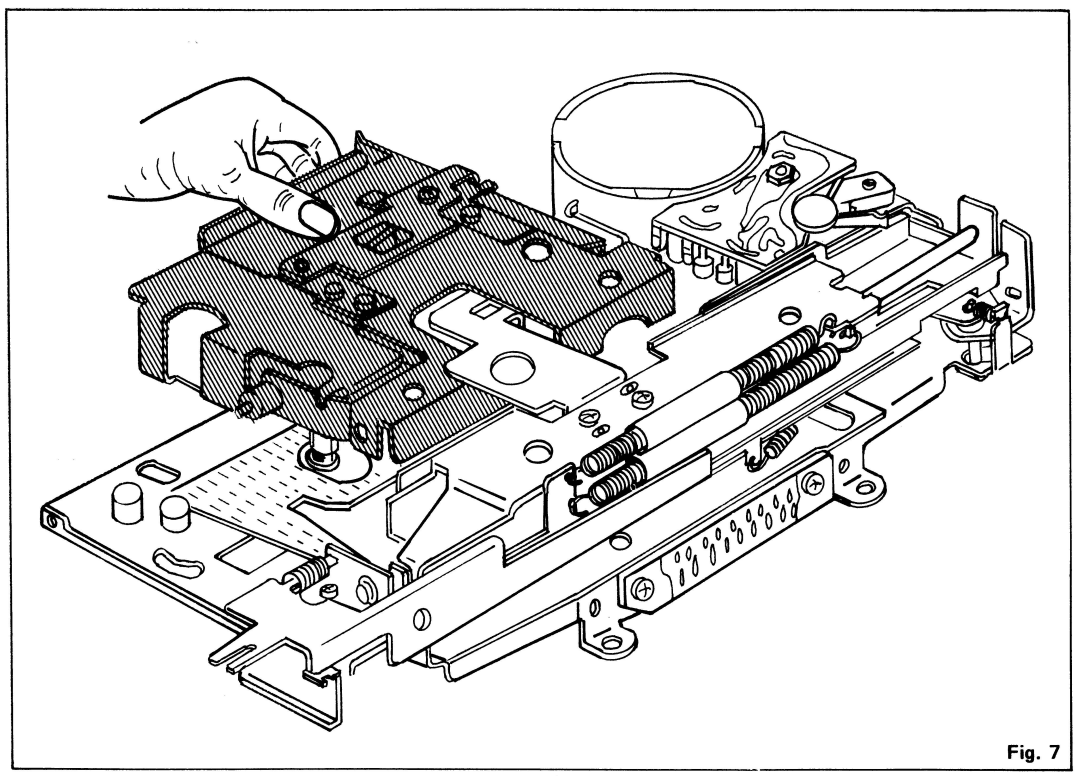

Fig. 7

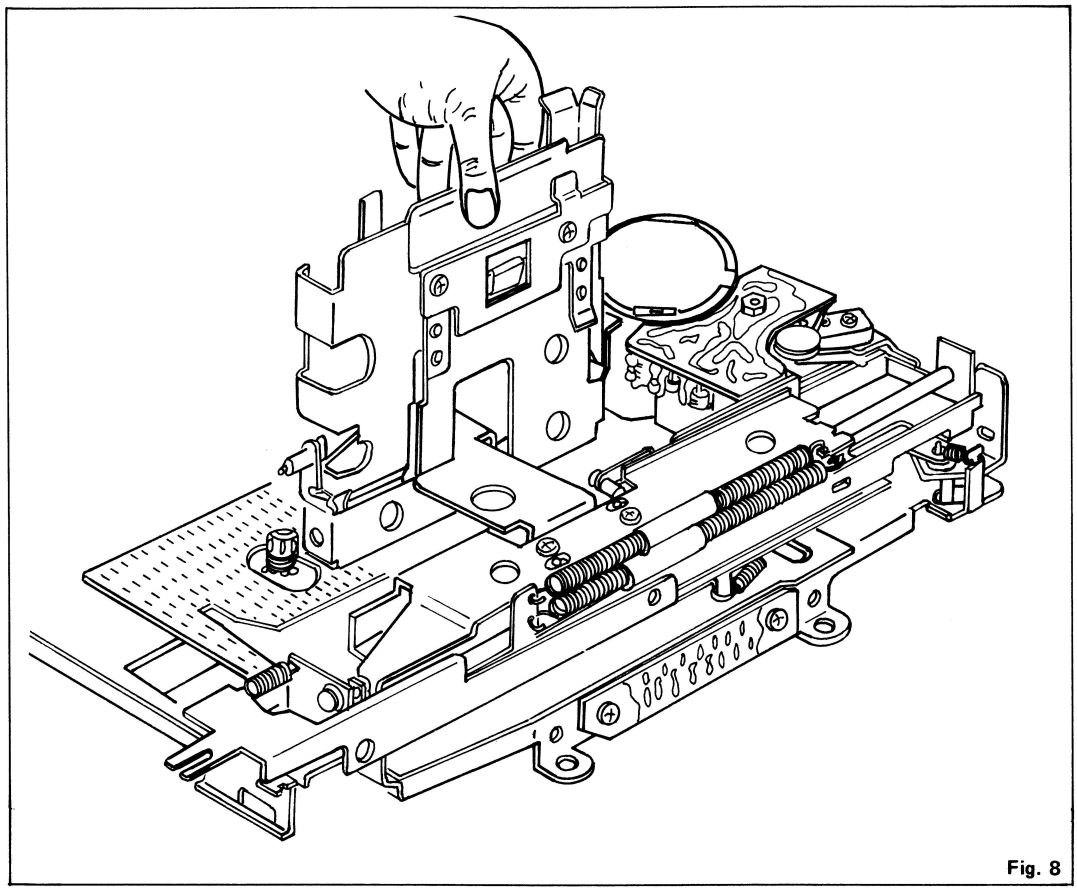

Fig. 8

6-3 Method of Removing Eject Mechanism (See Fig.9)

1) Remove the 3 machine screws (714-2605-81).
2) Lift the eject mechanism and take it off as a whole.

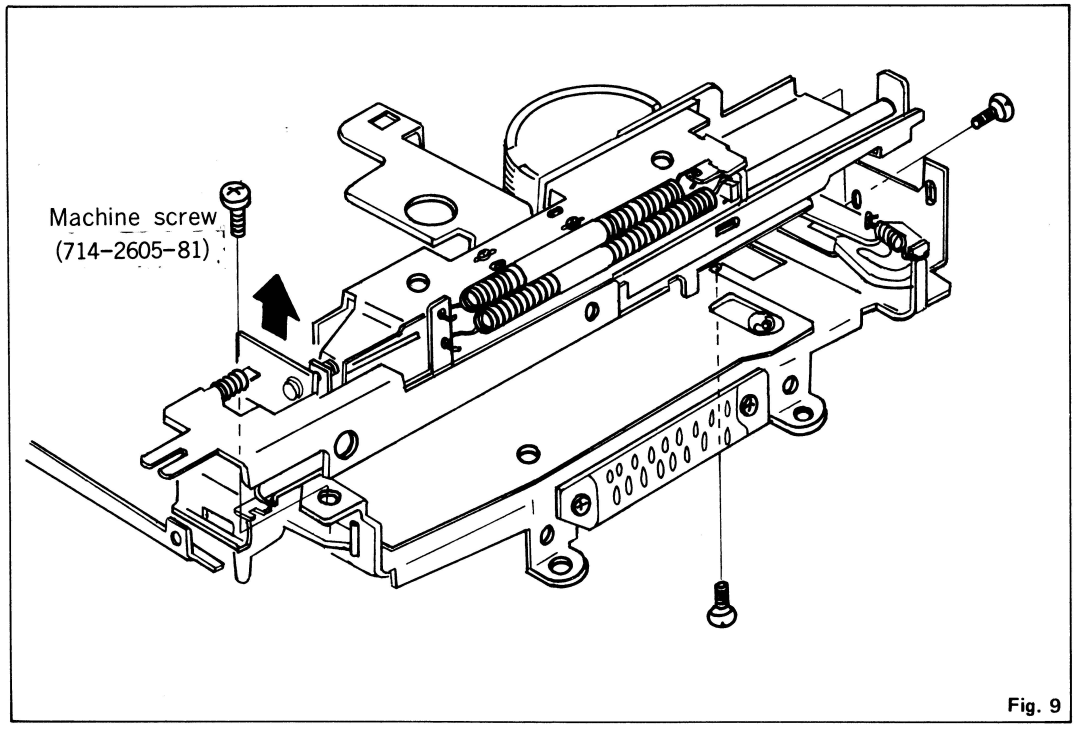

Fig. 9

7. Method of Installing Parts Concerned with Pack Guide Ass'y

7-1 Installing Eject mechanism (See Fig.10)

1) Set the head plate (960-2917-00) to OFF position.
2) Set the arm (631-0173-00) to the front side.
3) Set the change plate (630-0865-00) to the Forward side.
4) Set the eject mechanism for inserting pack.
5) Insert the protruding part of the eject mechanism into the square hole of the deck and mount the mechanism to the deck plate Ass'y (960-2912-00) with machine screw Ⓐ so that the change plate come to the front side of the protruding part of the lock plate (630-0861-00) and the select lever (630-0859-00) goes to the back side of the arm.
6) After mounting, check the relative positions of select lever and arm, and change plate and lock plate; depress the head lever with finger and set the head plate to ON position.
7) Set the eject mechanism to OFF state.

7-2 Installing pack guide

Perform the operation of 6-2 in the reverse order.

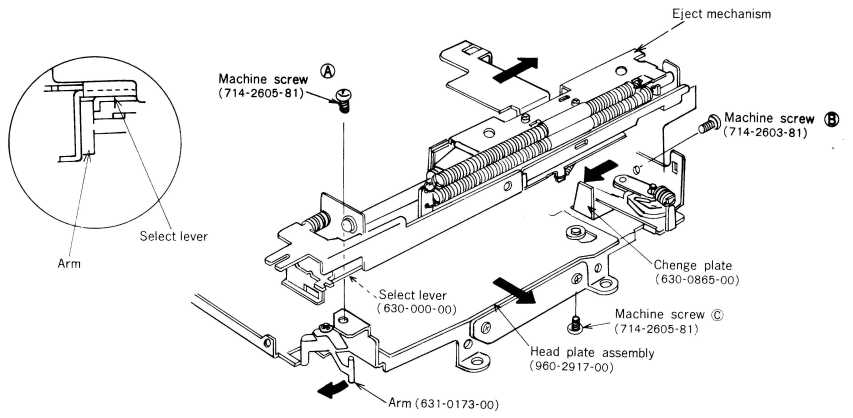

Fig. 10

7-3 Installing side pannel Ass'y (See Fig.11)

1) Raise the front side of the side pannel a little upward and insert the pin (632-0536-00) into the hole of the guide arm (960-2919-00).
2) Return the side pannel parallel to the mechanism. At this time, make sure that the curved part of the guide plate (630-0864-00) at the top of pack guide is in the square hole of the side pannel.
3) Temporarily fix the mounting screw. (CAUTION: Never use any other mounting screw except 714-2603-81)
4) Next set the eject mechanism for inserting pack, without inserting the pack.
5) Adjust by shifting the side pannel forward or backward so that the carved mark of the pack guide comes in the center of the two carved marks of the deck plate and securely tighten the screw.
6) Attach the spring (750-1680-00).
7) Insert the pack and check the eject operation.

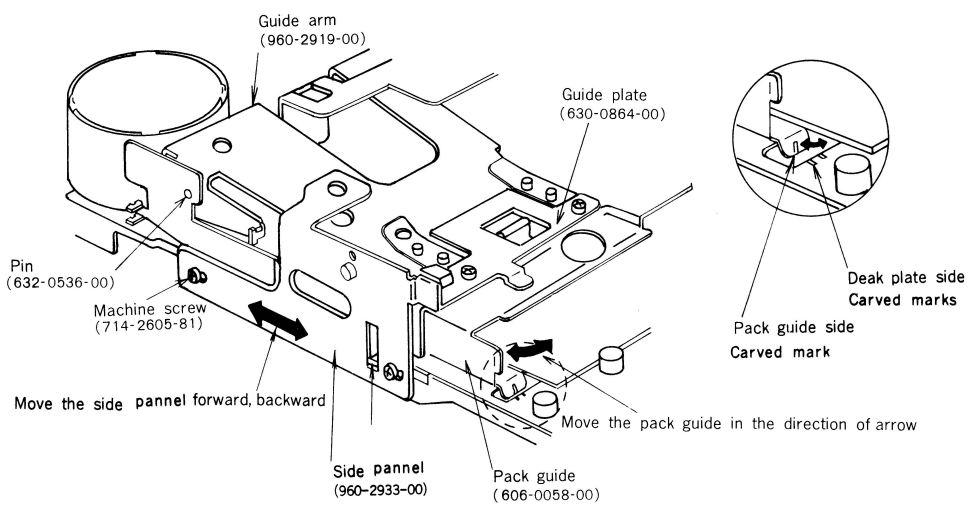

Fig. 11

8. Method of Adjusting Guide Plate (See Fig.12)

Perform this adjustment when pack insertion is bad and operation is erronous or eject operation is incomplete.

1) Insert the pack and loosen the screw with which the guide plate (630-0864-01) of the pack guide is fixed. Next drop the pack by slightly pressing it with finger, set the guide plate in the center of the play (clearance) by moving it forward and backward, and tighten the screw.

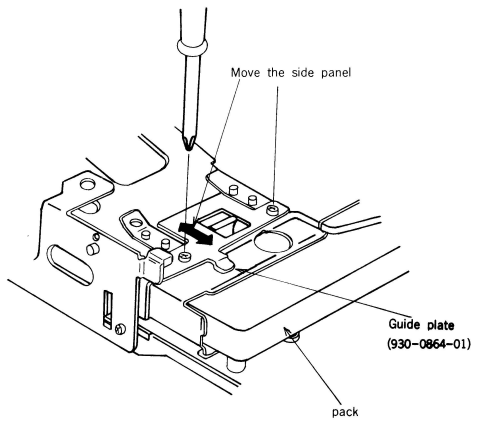

Fig. 12

9. Method of Adjusting FF plate (See Fig.13)

Perform this adjustment when due to erronous autoeject operation the pack is not ejected at FF or REW.

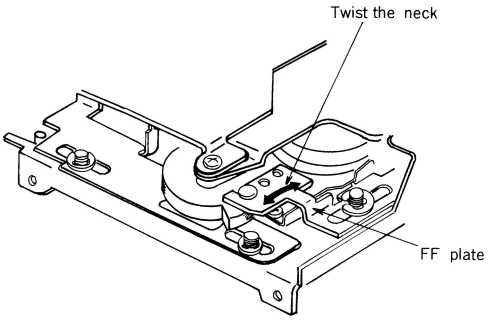

(960-2924-00) Method of bending FF plate

Forward direction when ther is eject fault during FF, bend in ↙ direction

Reverse direction when ther is eject fault during FF, bend in ↗ direction

Fig. 13

* TROUBLESHOOTING

Mechanism Section

Symptom	Place and cause of fault	Corrective action
High tones absent	1) Head azimuth adjustment faulty 2) Scratches on head 3) Head dirty	1) Adjust (see section 1) 2) Replace the head (see section 6, 7) 3) Clean (see section 11)
No sound	1) Power switch faulty 2) Motor faulty 3) Drive belt came off	1) Replace the power switch (013-3266-00) 2) Replace the motor (020-0320-01) 3) Replace the belt (602-0034-00)
Tape is not being wound (auto reverse due to tape bulging out)	1) Reel base faulty 2) Idler pressure (contact) faulty 3) Cassette tape faulty (cassette curved, tape hard wound → hub does not move)	1) Measure the take-up torque of the reel base. If less than 45g-cm, replace the real base (960-2926-00). 2) Check idler switching mechanism (check by moving the change plate in PLAY state without pack). a. Repair if the idler is stuck up. b. Clean off any oil or grease c. If the spring (750-1683-00) came off, stretch it properly. 3) If the tape is hard wound, move with a pencil, etc. so that it moves smoothly.
Speed increases during operation (more frequent in the beginning of tape take-up)	1) Pinch roller dirty 2) Pinch roller pressure (contact) faulty 3) Reel base faulty	1) Clean 2) Adjust (measure the pressure, adjust to specified pressure 220g ~ 280g) (See section 2) 3) Measure the take-up torque. If the torque is larger than 75g-cm or if there is unevenness, replace the reel (960-2926-00).
Speed is abnormally slow	1) Belt displaced 2) Tension roller faulty	1) Install at correct position 2) Replace (at this time, clean the shaft)
Speed faulty	1) Motor and motor pulley combination faulty	1) Replace the motor pulley a. When speed is fast: D rank → to B rank, replace in steps of 1 rank b. When speed is slow: D rank → E rank, replace in steps of 1 rank
Wow, flutter faulty	1) Capstan dirty (in the case of approx. 8Hz flutter) 2) Adjustment screw at the bottom of flywheel too tight (in the case of approx. 8Hz flutter) 3) Pinch roller faulty (when flutter is of the same frequency as the pinch roller) 4) Detector leaf stuck up, contact (pressure) faulty (in the case of flutter matching with the rotation of the supply reel base) 5) Reel base faulty (in the case of flutter matching with the rotation of the supply reel base) 6) Motor faulty (governor faulty) (When wow and flutter decreases when the set is tilted) 7) Belt faulty (twisted, dirty)	1) Clean 2) Adjust flywheel play to 0.2 ~ 0.3 (0.4 variation for 1 rotation) 3) Clean or replace (960-2921-00, 960-2922-00) (See section 2, 6, 7) 4) Replace the detector or correct the bend of leaf. (631-0180-00) 5) Replace (960-2921-00, 960-2922-00) 6) Replace the motor (020-0320-01) 7) Replace the belt, repair the twist, clean (602-0034-00)
Abnormal reversion during PLAY	1) Detector faulty 2) Reel base faulty 3) Detector contact faulty	1) Replace (631-0180-00) 2) Replace (960-2921-00, 960-2922-00) 3) Repair the bend of leaf (so that wow and flutter does not worsen)

Symptom	Place and cause of faulty	Corrective action
FF, REW not possible	1) U spring fatigued 2) Spring (750-1689-00) fatigued (slip between flywheel and FF idler) 3) Spring bonding faulty (slip at reel base)	1) Replace (750-1688-00) 2) Replace 3) Take off bond sticking to FF idler shaft side
Program selection not possible	1) Plunger faulty (open) (when NG when the operation is checked with manual switch) 2) Switching mechanism faulty (when only the plunger moves when checked with manual switch) (check the voltage (10V)) 3) Plunger position adjustment faulty (when operates at more than 11V)	1) Replace the plunger 2) Check related parts (spring 750-1681-00, cam plate Ass'y 960-2928-00, cam Ass'y 960-2929-00, change plate 630-0865-00, plate spring 630-0931-00) 3) Adjust (See section 4)
Auto eject operation erroneous	1) Select lever stuck up (auto eject performed at the end of tape PLAY after FF, REW) 2) Spring (750-1682-00) displaced (when auto eject performed at tape end at PLAY on forward side) 3) FF, REW mechanism adjustment faulty (auto eject not performed at tape end on FF or REW)	1) Repair select lever (sticking, bending, burr, etc.) (See section 6, 7) 2) Install at correct position 3) Adjust (See section 9)
Pack does not come out	1) Pack insertion mechanism operation faulty a). No grease at the roller shaft of guide arm b). No oil at head plate roller shaft c). No oil at slide plate's shaft roller d). No oil at the rolling contact (corss section of plate) of the rollers 2) Spring (750-1677-00) faulty (loading faulty) (1.1 Kg ± 10% at 102 mm)	1) a), b), c), d): Fill grease containing molybdenum (Nichimori LP-50C) (See section 6, 7) 2) Replace with a correct-loading spring
Pack does not drop completely	1) Side panel's mounting position adjustment faulty 2) Pack guide's guide plate adjustment faulty 3) No oil at the sliding part of side panel, guide plate 4) Plate (630-0863-00) position adjustment faulty	1) Adjust (See section 7-3) 2) Adjust (See section 8) 3) Apply LP-50C 4) Adjust (See section 10)
Indicator lamps (tape-running) light at the same time. Crosstalk produced.	1) Switch position adjustment faulty 2) Switch faulty 3) Change plate faulty (only when pack inserted again when ejected on reverse)	1) Adjust (See section 3) 2) Replace (013-3066-00) 3) Replace (630-0865-00)
Pack can not be inserted (comes out when inserted)	1) Change plate faulty 2) Lock plate operation faulty 3) Rubber part (345-2651-00) detached	1) Replace (630-0865-00) 2) Replace or apply grease (LP-50C) to pin after cleaning 3) Insert in correct position

Mechanism Section (Electrical)

Symptom	Place and cause of fault	Corrective action
Program automatic switching time abnormal (normal: 2 ~ 4 sec)	1) Too long (more than 4 sec) a). 33μF capacitor's capacity increased b). 27KΩ resistor's resistance increase c). 2.2μF capacitor's leakage current increased d). 2SH21, 2SC373 deteriorated 2) Too short (less than 2 sec) a. 2.2μF, 33μF capacitor's capacity down b. 27KΩ, 22KΩ resistors deteriorated c. 39KΩ, 18KΩ resistor's resistance increased d. 2SC373, 2SH21 deteriorated	1), 2) replace
Program automatic switching is erroneous (automatic reversion during tape PLAY)	1) Detector (inside reel base) faulty 2) 39K, 22K, 18K, 0.01μF, 2.2μF, D1 faulty 3) 2SC373 faulty 4) Switch (013-3066-00) contact faulty, lead soldering faulty	1) Replace 2) Replace 3) Replace 4) Position adjustment, or replace (See 3-3)
Plunger does not operate	Normal values 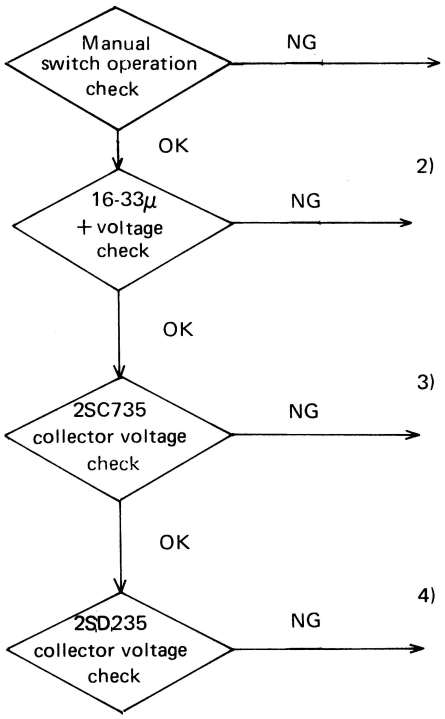 	1) a. Plunger faulty b. 10D4 short 2) a. 2SC373 faulty b. 2SH21 faulty c. 1S1555 open d. 12K, 27K, 330Ω open e. 16 - 33μF short 3) a. 33Ω open b. 2SC735 faulty 4) a. 1K short b. 2SD235 taulty 1) - 4) replace
	NOTE: This mechanism has 2 reel base rotation detecting terminals because of tape coiling prevention. Switching is performed so that detection is made by the take-up reel according to the channel direction. Therefore, when set in PLAY state without inserting cassette pack, automatic reversion is not performed.	
Plunger pull-in time is abnormal (Normal: 0.2 ±0.05 sec)	1) Too long a. 12K resistor's resistance increased b. 33μF capacitor's capacity increased 2) Too short a. 1S1588 short b. 12K resistor deteriorated	

* EXPLODED VIEW: ⊙Main section

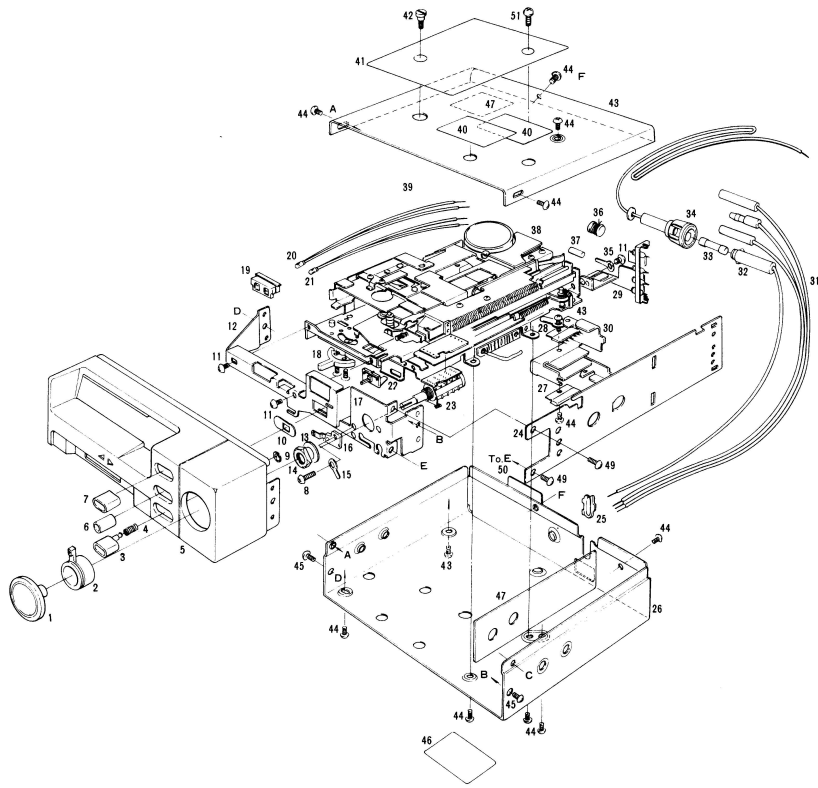

* PARTS LIST: ⊙Main section

REF.NO	PART NO	DESCRIPTION	PC.S
1	380-3557-00	Knob	1
2	380-3558-00	Knob	1
3	380-3559-00	Knob	1
4	750-1712-00	Spring	1
5	940-0022A	Escucheon assembly	1
6	380-3556-00	Knob	1
7	380-3555-00	Knob	1
8	714-3008-81	Machine screw (M3 x 8)	1
9	743-2000-00	E-ring	1
10	353-0081-00	Shade	1
11	714-2604-00	Machine screw (M3 x 8)	2
12	309-0273-00	Front plate	1
13	722-0231-00	Special nut	1
14	745-0430-01	Special washer	1
15	073-0439-00	Terminal	1
16	335-0802-00	Molded part	1
17	714-2604-41	Machine screw (M2.6 x 4)	2
18	380-3534-00	Knob	1
19	345-2662-00	Rubber part	1
20	017-0314-08	Pilotlamp	1
21	017-0314-07	Pilotlamp	1
22	335-0803-00	Molded part	1
23	012-0007A	Variable resistor assembly	1
24	099-4517-02	PWB	1
25	335-0580-00	Molded part	1

REF.NO	PART NO	DESCRIPTION	PC.S
26	311-0887-00	Lower case	1
27	051-0055-00	IC	2
28	051-0020-04	IC	2
29	330-1570-00	Pressed part	1
30	944-0454-00	Filter assembly	1
31	313-0931-00	Heat sink	1
32	851-2057-01	Speaker lead	1
33	850-1822-00	A-lead	1
34	120-0050-00	Fuse (5A)	1
35	850-1844-01	A-lead	1
36	330-4896-00	Pressed part	1
37	010-1686-00	Coil	1
38	820-4020-02	Vinyl tube	1
39	930-0432-00	Tape mechanism	1
40	290-2574-00	Label	2
41	285-0653-01	Guide	1
42	716-0288-00	Special nut	1
43	310-0855-01	Upper case	1
44	714-3004-81	Machine screw (M3 x 4)	12
45	714-3006-81	Machine screw (M3 x 6)	4
46	286-3678-00	Set plate	1
47	347-0316-00	Paper part	1
48	347-0566-00	Paper part	1
49	714-3005-81	Machine screw	2
50	285-0620-00	Guide label	1
51	716-0295-00	Special screw	1

* EXPLODED VIEW:
⊙Electrical section

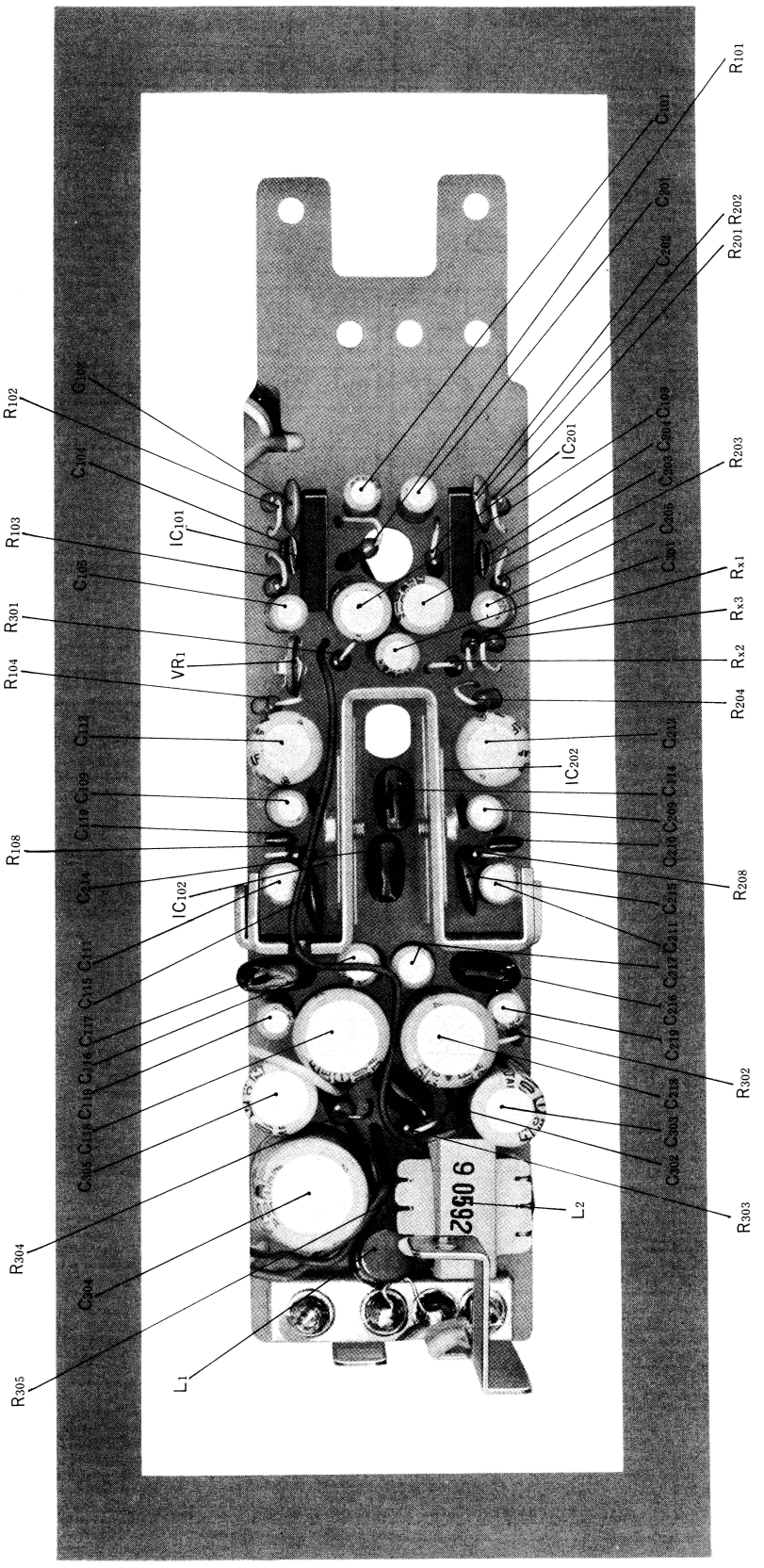

PARTS LIST:

⊙Electrical section

REF.NO	PART NO	DESCRIPTION	PC.S
IC_{201},	051-0020-00 ~ 04	IC	2
$IC_{101,201}$	051-0055-04 ~ 00	IC	2
L_1	010-1686-0.1	Coil	1
L_2	009-0592-00	Choke	1
VR_1	012-3170-06	Variable resistor	1
$C_{101,201}$	180-4754-32	Electrolytic capacitor (16V4.7μF)	2
$C^{102,113}_{202,213}$	153-3302-13	Ceramic capacitor (33PF CH)	4
$C_{103,203}$	180-1074-22	Electrolytic capacitor (10V 100μF)	2
$C_{104,204}$	141-1032-12	Polyester capacitor (50V 0.01μF)	2
$C_{105,205}$	180-2254-62	Electrolytic capacitor (50V 2.2μF)	2
$C^{109,119}_{209,219}$	180-1054-62	Electrolytic capacitor (50V 1μF)	4
$C_{110,210}$	141-1522-12	Polyester capacitor (50V 0.0015μF)	2
$C_{111,211}$	180-4764-22	Electrolytic capacitor (10V 47μF)	2
$C_{112,212}$	180-2274-12	Electrolytic capacitor (6.3V 220μF)	2
$C^{114,116}_{214,216}$	141-6832-15	Polyester capacitor (50V 0.068μF)	4
$C_{115,215}$	153-5602-13	Ceramic capcitor (56PF CH)	2

REF.NO	PART NO	DESCRIPTION	PC.S
C_{118}	042-0153-00	Special capacitor (10V 1000μF)	1
C_{301}	180-3364-22	Electrolytic capacitor (10V 33μF)	1
C_{302}	180-3374-32	Electrolytic capacitor (16V 330μF)	1
C_{303}	141-1043-15	Polyester capacitor (50V 0.1μF)	1
C_{304}	042-0178-00	Special capacitor (16V 1000μF)	1
$R_{101,201}$	111-6831-32	Film resistor (¼W 68KΩ±5%)	2
$R_{102,202}$	111-1831-32	Film resistor (¼W 18KΩ±5%)	2
$R_{103,203}$	111-3941-32	Film resistor (¼W 390KΩ±5%)	2
$R_{104,204}$	111-5621-32	Film resistor (¼W 5.6KΩ±5%)	2
$R_{108,208}$	111-1211-32	Film resistor (¼W 120Ω±5%)	2
R_{301}	111-4721-32	Film resistor (¼W 4.7KΩ±5%)	1
R_{302}	111-2221-32	Film resistor (¼W 2.2KΩ±5%)	1
R_{303}	111-9111-32	Film resistor (¼W 910Ω±5%)	1
R_{304}	115-1511-51	Film resistor (1W 150Ω±5%)	1
R_{305}	115-2291-52	Film resistor (1W 2.2Ω±5%)	1

⊙Auto reverse curicuit

REF.NO	PART NO	DESCRIPTION	P.C.S
Q_1	102-0373-00	Transistor(2SC373)	1
Q_2	106-0021-99	Transistor(2SH21)	1
Q_3	102-0735-21	Transistor(2C735Y)	1
Q_4	103-0235-85	Transistor(2SD235LBY)	1
$D_{1,2}$	001-0112-00	Diode	2
C_{403}	181-3363-32	Electrolytic capacitor (16V 33μF)	1
C_{404}	180-1064-32	Electrolytic capacitor (16V 10μF)	1
C_{402}	181-2253-62	Electrolytic capacitor (50V2.2μF)	1
C_{401}	141-1033-12	Polyester capacitor (50V0.01μF)	1
R_{407}	114-3302-51	Film resistor (1W33Ω±10%)	1
R_{405}	111-2731-32	Film resistor (¼W27KΩ±5%)	1
R_{401}	111-2232-32	Film resistor (22K)	1
R_{403}	111-3932-32	Film resistor (¼W39KΩ±10%)	1
R_{404}	111-1232-32	Film resistor (¼W12KΩ±10%)	1
R_{402}	111-1832-32	Film resistor (18K)	1
R_{408}	111-1022-32	Film resistor (¼W1KΩ±10%)	1
R_{406}	111-3312-32	Film resistor (¼W330Ω±10%)	1

⊙Variably resistor PWB

REF.	PART NO	DESCRIPTION	P.C.S
$C_{106,206}$	141-6832-15	Polyester capacitor (50V0.068μF)	2
$C_{107,207}$	141-1022-11	Polyester capacitor (50V0.001μF)	2
$C_{108,208}$	141-3932-14	Polyester capacitor (50V0.039μF)	2
$R_{105,205}$	111-1031-32	Film resistor (¼W10KΩ±5%)	2
$R^{106,107}_{206,207}$	111-2231-32	Film resistor (¼W22KΩ±5%)	4

* EXPLODED VIEW:

⊙Mechanism section

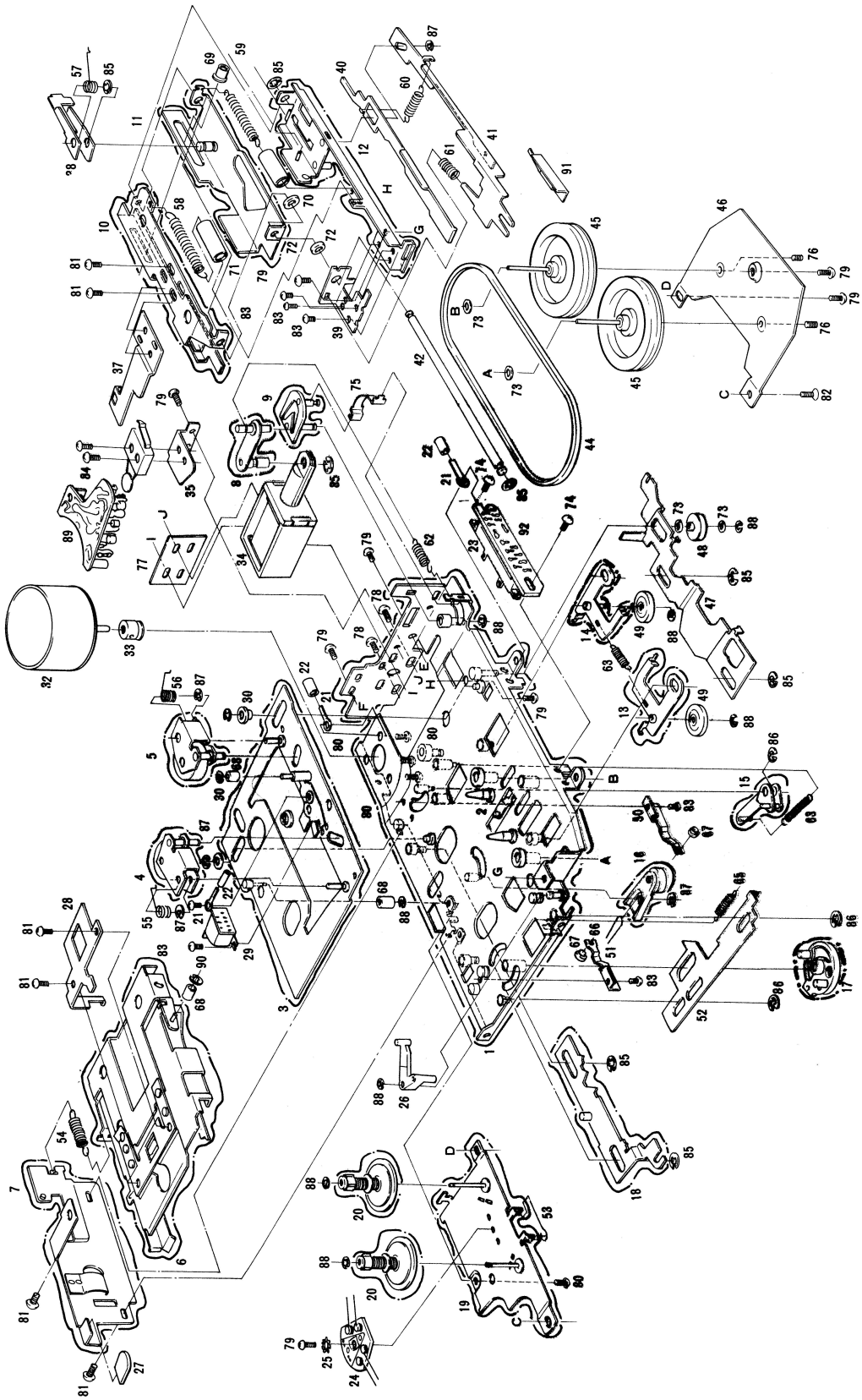

* PARTS LIST: ⊙Mechanism section

REF.NO	PART NO	DESCRIPTION	PC.S
1	960-2912-00	Deck plate assembly	1
2	960-2913-00	Stopper assembly	1
3	960-2913-00	Head plate assembly	1
4	960-2921-00	Roller A assembly	1
5	960-2922-00	Roller B assembly	1
6	606-0003A	Pack guid assembly	1
7	960-2933-00	Side panel assembly	1
8	960-2928-00	Cam plate assembly	1
9	960-2929-00	Cam assembly	1
10	960-2914-00	Slide plate assembly	1
11	960-2961-00	Slide plate B assembly	1
12	960-2916-00	Frame assembly	1
13	960-2931-00	Idler plate A assembly	1
14	960-2932-00	Idler plate B assembly	1
15	960-2927-00	Rink assembly	1
16	960-2925-01	F.F arm assembly	1
17	960-2923-00	F.F knob assembly	1
18	960-2924-00	F.F plate assembly	1
19	960-2930-00	Bottom plate assembly	1
20	960-2926-00	Reel base assembly	2
21	330-4896-00	Pressed part	3
22	820-4020-02	Vinyl-tube	3
23	013-3066-00	Switch	1
24	631-0180-00	Decetor	1
25	742-2600-20	Toothed washer	1
26	631-0173-00	Arm	1
27	345-2647-00	Rubber part	1
28	630-0864-01	Guide label	1
29	011-0238-01	Head	1
30	610-0067-00	Roller	2
31	610-0065-00	Roller	1
32	020-0320-01	DC motor	1
33	603-0043-00	Motor pulley	1
34	015-0206-00	Plunger	1
35	630-0862-00	Switch plate	1
36	013-3266-00	Switch	1
37	630-0863-01	Pressed part	1
38	630-0861-00	Lock plate	1
39	630-0873-00	Plate	1
40	630-0859-00	Seleckt lever	1
41	630-0860-00	Eject lever	1
42	612-0140-00	Shaft	1
43	741-2600-21	Spring washer	5
44	602-0034-00	Belt	1
45	611-0041-00	Flywheel	2
46	630-0866-00	Flywheel plate	1

REF.NO	PART NO	DESCRIPTION	PC.S
47	630-0865-00	Change plate	1
48	632-0561-00	Tension roller	1
49	632-0558-01	Idler	2
50	630-0868-00	Brake B	1
51	630-0867-00	Brake A	1
52	630-0879-00	Slide plate	1
53	750-1689-00	Spring	1
54	750-1680-00	Spring	1
55	750-1685-00	Spring	1
56	750-1684-00	Spring	1
57	750-1686-00	Spring	1
58	750-1676-00	Spring	1
59	750-1677-00	Spring	1
60	750-1682-00	Spring	1
61	750-1687-00	Spring	1
62	750-1681-00	Spring	1
62	750-1683-00	Spring	1
64	750-1679-00	Spring	1
65	750-1678-00	Spring	1
66	750-1688-00	Spring	1
67	345-2441-00	Rubber part	2
68	610-0066-00	Roller	3
69	610-0068-00	Roller	1
70	820-3020-05	Vinyl tube	1
71	820-4020-04	Vinyl tube	1
72	345-2651-00	Rubber part	2
73	746-0624-00	Special washer	4
74	732-2605-11	Sems screw	2
75	630-0931-00	Plate spring	1
76	716-0281-00	Special screw	2
77	347-0437-00	Paper part	1
78	714-3004-81	Machine screw (M3 x 4)	2
79	714-2605-81	Machine screw (M2.6 x 5)	9
80	732-2604-11	Sems screw(M2.6×4)	3
81	714-2603-81	Machine screw (M2.6 x 3)	6
82	714-2605-41	Machine screw (M2.6 x 5)	1
83	714-2004-81	Machine screw (M2 x 4)	6
84	714-2308-81	Machine screw (M2.3 x 8)	2
85	743-3000-00	E-ring (M3)	9
86	743-2500-00	E-ring (M2.5)	2
87	743-2000-00	E-ring (M2)	6
88	743-1500-00	E-ring (M1.5)	10
89	990-0216-00	PWB assembly	1
90	716-0286-00	Special screw (M2 x 0.25 x 4)	1
91	630-0930-01	Plate spring	1
92	099-4476-00	PWB	1

* PRINTED WIRING BOARD:

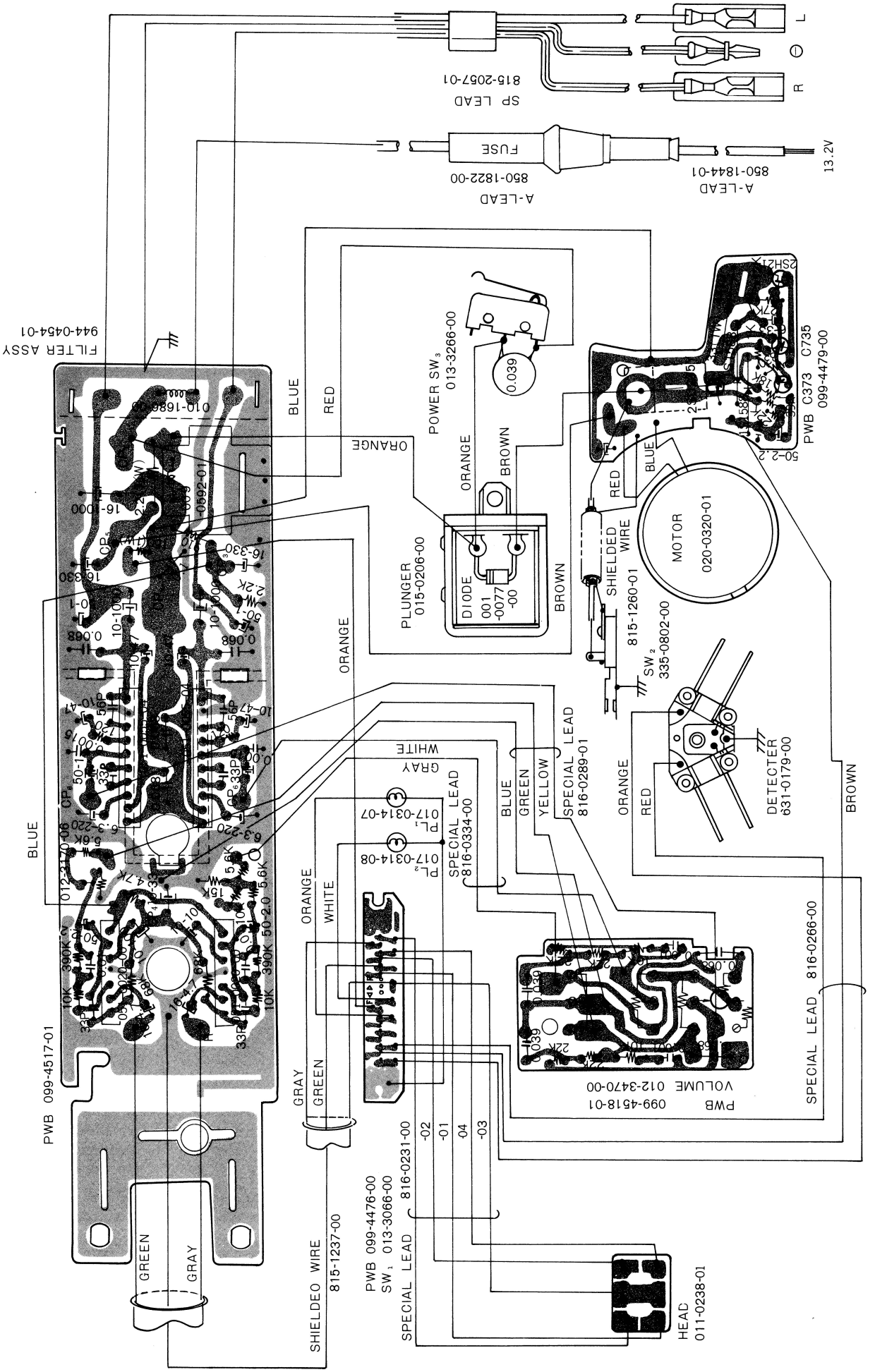

* CIRCUIT DIAGRAM:

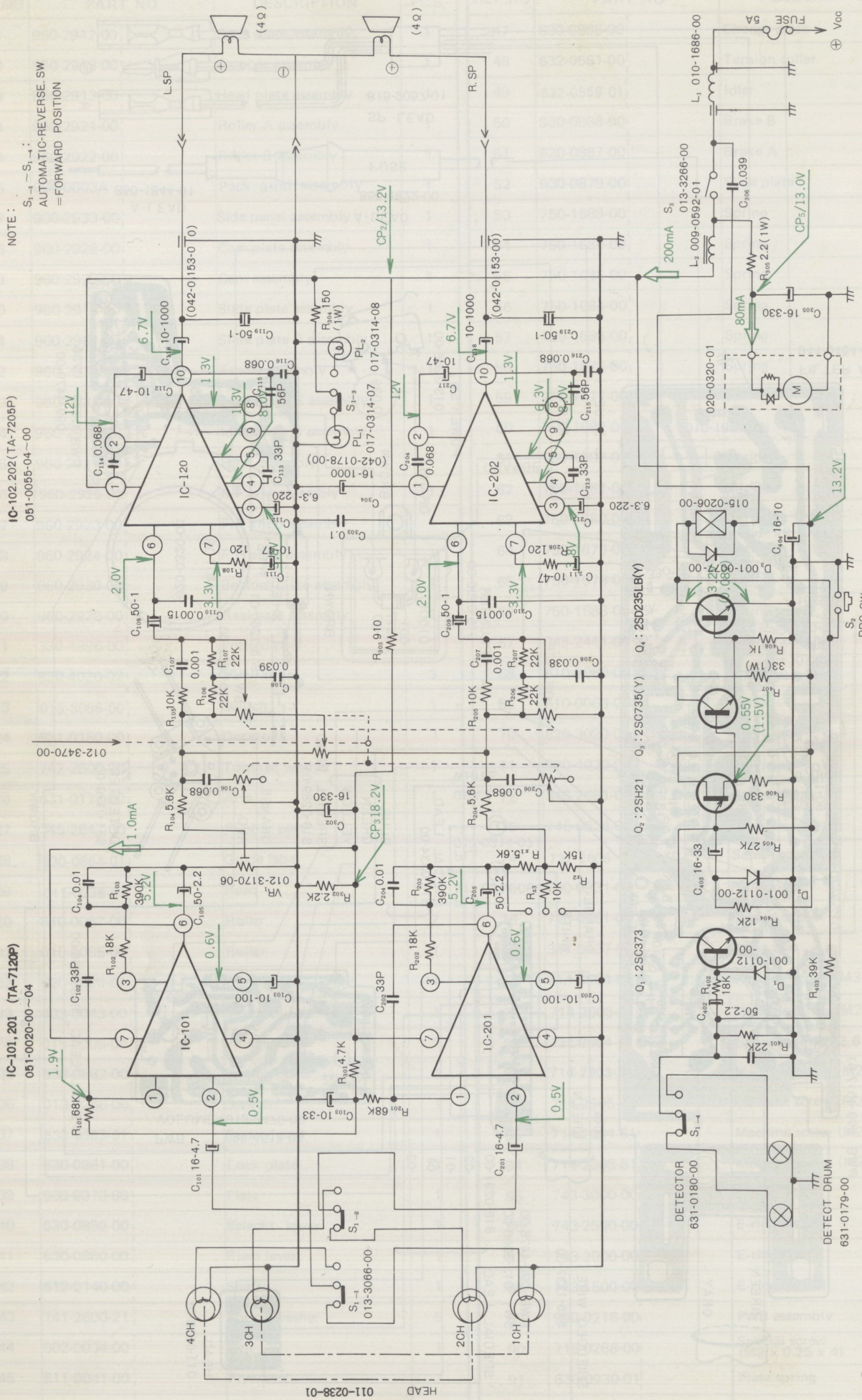

＊CIRCUIT DIAGRAM: