PHILIPS Service notes

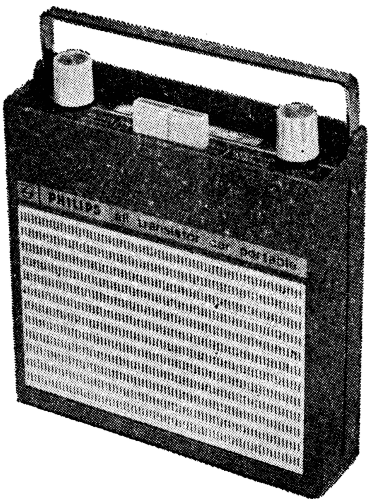

MODEL PA4

SPECIFICATIONS

Tuning range	525-1615 kc/s.
Intermediate frequency	455 kc/s.
Power supply—portable	9V battery type 2362
—car	12V only.
Battery consumption	see table below.
Fuse	750 mA.
Dial lamp	14V, 0.75W (3113.104.90030)
Aerial input capacitance	60 pF.

CASE OPENING FOR SERVICE

Remove battery hatch cover. Remove battery and unclip leads. Remove two case fastening screws and lift off top cover. Lift off bottom of case and lay over to the extent of the speaker leads. All components are now accessible for service.

To check audio module, unscrew heat sink securing screw and release board from plastic securing clips. The R.F. module can be lifted from its mounting base after first unsoldering C208 from the tuning gang.

Reassembly is a reversal of the above with care to position the dial scale in front of the ridge of the bottom portion of the case.

Cradle wiring components are accessible after removing four screws and lifting off the metal cover at the rear of the cradle.

OUTPUT TRANSISTOR ADJUSTMENT

Quiescent current adjustment should be done under 9 volt operation. Adjustment is made under no signal conditions by means of R108. Metering points are provided for insertion of a meter. Adjustment should be in accordance with the following temperature/current table. This table also shows quiescent current at 14.4V and total current at 9V and 14.4V for guidance purposes.

Amb. Temp. °F.	50	60	75	90	100	110
Q. Current, mA (9V)	1.5-2.5	2-3	3.0±20%	3.0-4.5	3.5-5.0	4.5-6.0
Q. Current, mA (14.4V)		25-40	20-28	18-22	15-20	14-17
Total Current, 9V		5.5-7.0	6.5-8.0	7.0-8.5	7.5-9.0	8.0-9.5
Total Current, 14.4V		33-48	29-37	28-32	25-30	25-28

ALIGNMENT

The various trimming points used in alignment are shown in the interconnection drawing.

I.F. Alignment

Fuly open tuning capacitor. Apply signal generator through normal I.F. dummy to base of TR1. Detune secondaries of 1st and 2nd I.F.T.'s by screwing out cores about one turn. Peak cores in the following order and at the quoted frequencies.

3rd I.F.T.	455 kc/s.
2nd I.F.T. primary	454 kc/s.
1st I.F.T. primary	454 kc/s.
2nd I.F.T. secondary	456 kc/s.
1st I.F.T. secondary	456 kc/s.
Repeak 3rd I.F.T. at	455 kc/s.

R.F. Alignment (portable)

Position switch for portable use. Apply the signal generator via a coupling turn around the rod aerial assembly.

Fully open the tuning capacitor and at 1620 kc/s peak trim oscillator trimmer C207.

Fully close the tuning capacitor and at 520 kc/s peak trim the oscillator coil core.

Repeat the above two operations.

Tune to 1500 kc/s signal and peak trim portable aerial trimmer C203.

Tune to 600 kc/s signal and peak position rod aerial coil L205-6.

Repeat the above two operations.

R.F. Alignment (Car)

Position switch for car use. Apply signal generator to the aerial socket through a dummy consisting of a capacitor of 60 pF across the socket and another of 15 pF in series with the generator lead.

Tune to 1500 kc/s signal and peak trim car aerial trimmer C204.

Tune to 600 kc/s signal and peak trim core of aerial coil L202-3.

Repeat the above two operations.

March, 1967

Published by PHILIPS ELECTRICAL PTY. LTD., AUSTRALIA
Branches in all States

PA4

MECHANICAL PARTS LIST

DESCRIPTION	CODE No.
Aerial socket	CZ.369.951 C/F 733-23-7
Battery hatch cover, red	3113.104.00130
Battery hatch cover, grey	3113.104.00910
Battery connector assy. (to portable battery)	CR.106.203
Battery socket (mounted in cradle)	3113.100.20020
Carrying handle	3113.108.03040
Case—bottom, red	3113.108.00190
Case—bottom, grey	3113.108.01890
Case—top, red	3113.108.00180
Case—top, grey	3113.108.01900
Clip—speaker mounting, 4x	3113.101.00280
Dial cord spring	3113.101.00070
Dial drive cord, 20½" required	K.299.ZZ/938
Dial drive drum	CS.360.404
Dial pointer assy.	3113.108.03600
Dial scale	CS.412.040

DESCRIPTION	CODE No.
Fuse holder assy.	CZ.371.116 MSP 36546
Handle—carrying	3113.108.03040
Knob—tuning and volume	3113.108.00200
Knob—push button, 2x	3113.108.00210
Lampholder assy.	MK.957.84
Socket—aerial	CZ.369.951 C/F 733-23-7
Socket—battery (mounted in cradle)	3113.100.20020
Socket—dial lamp	MK.957.84
Speaker mounting clip, 4x	3113.101.00280
Speaker plug	C762/106
Speaker socket	C762/004
Spindle—tuning	3113.101.20190
Spring—between knob and dial scale, 2x	MK.730.50
Spring—dial cord	3113.101.00070
Switch—changeover/tone	3113.108.40010
Tuning spindle	3113.101.20190

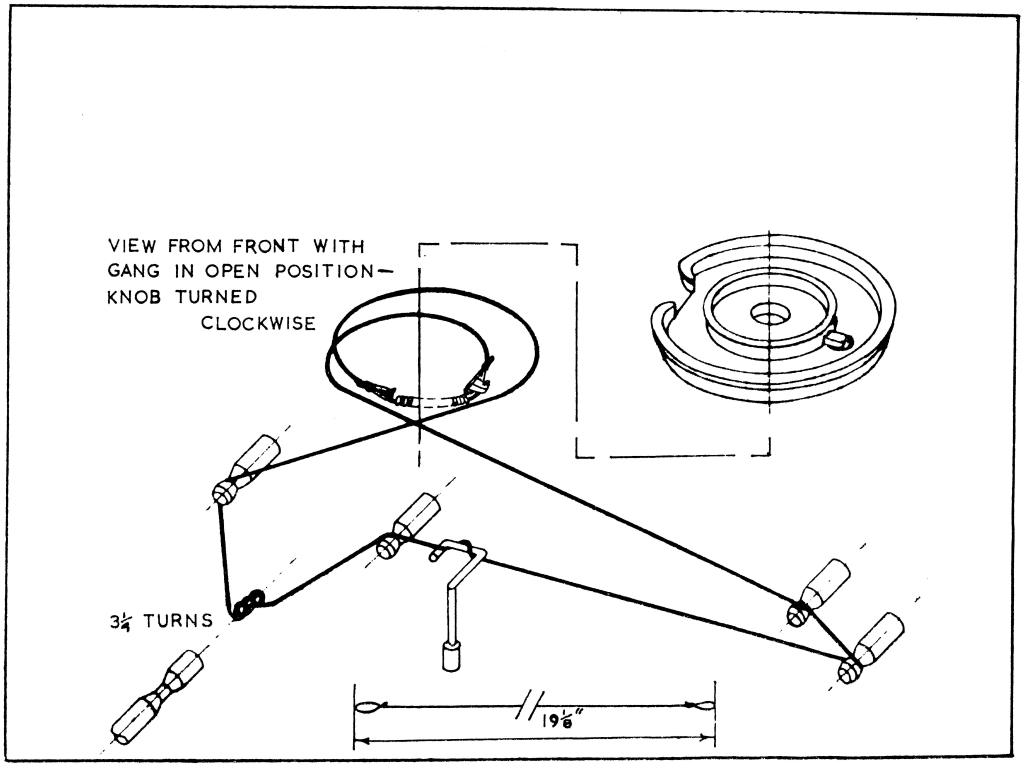

		204	201																			
L	208, 202, 205, 206, 203																				207	L
R															202	203	201		108			R
C	211, 209, 210, 201, 202			214	203	204	205	208, 206	207						212		215	213				C
TR										2	3.1	4, D1						101, 102		103, 104		TR

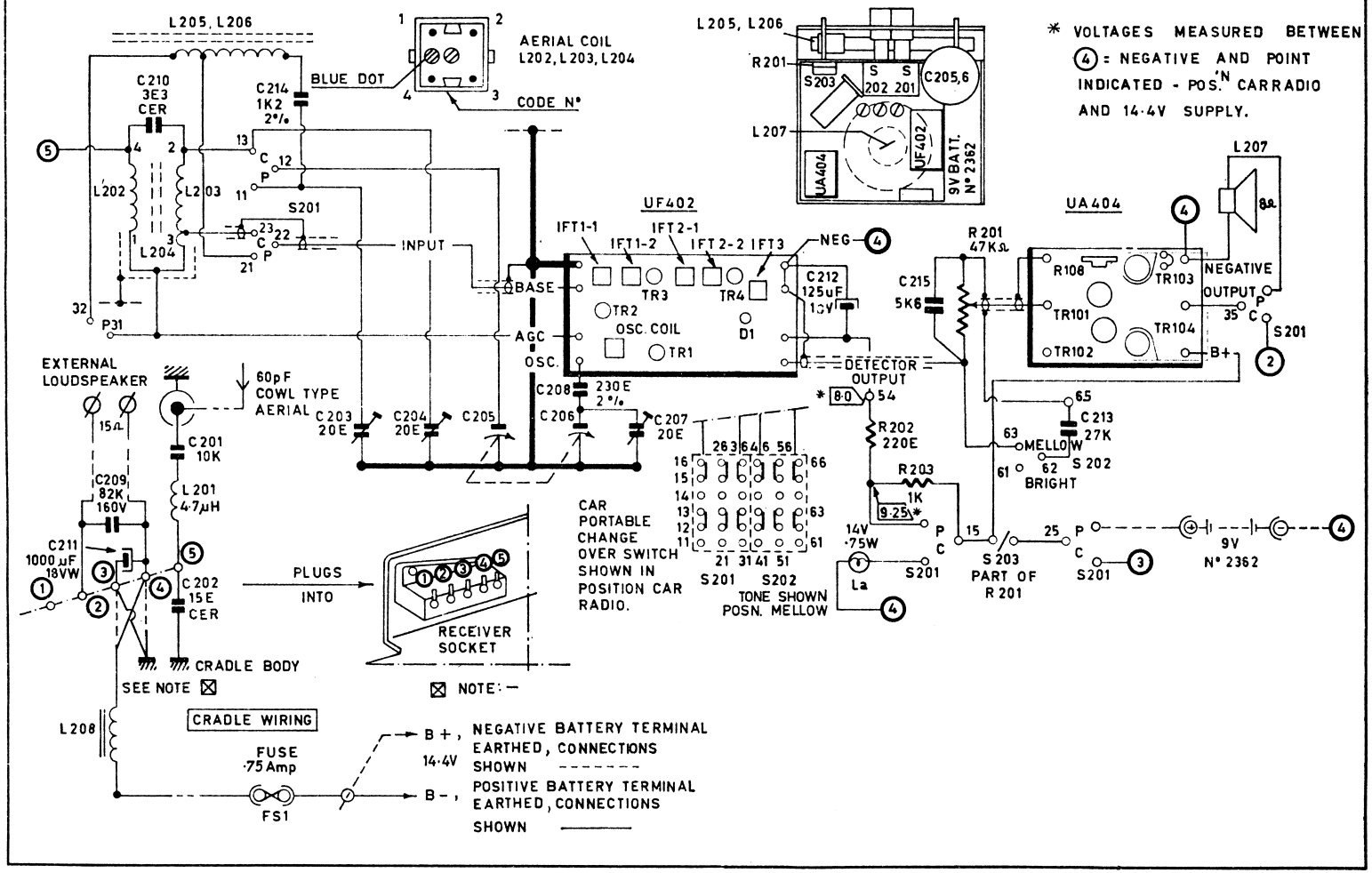

PA4

PA4

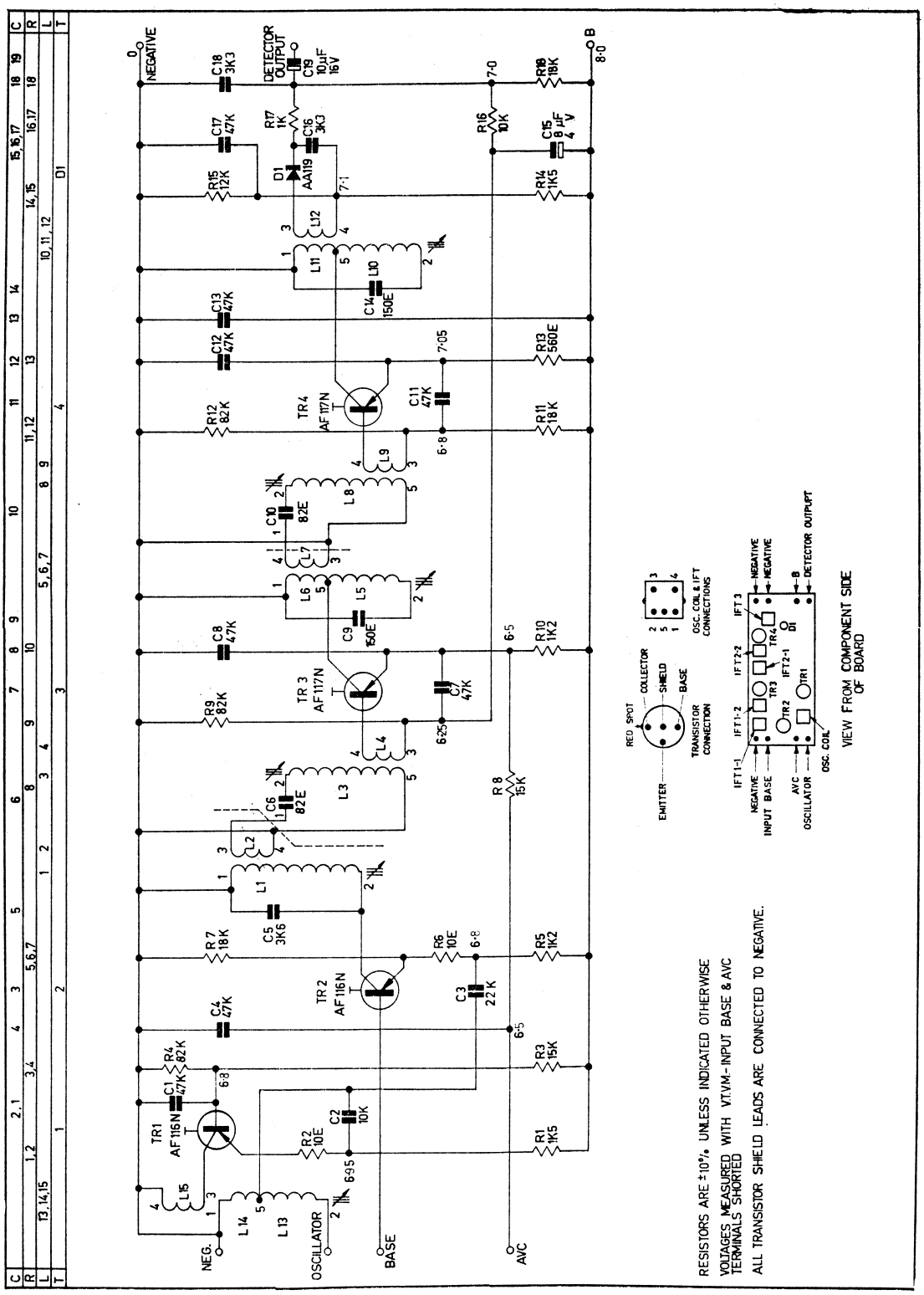
NEGATIVE
DETECTOR OUTPUT
B
C18 3K3
C19 10µF 16V
R19 18K
C17 47K
R17 1K
C16 3K3
R16 10K
C15 8 µF 4 V
R15 12K
D1 AA119
R14 1K5
L12
L11
L10
C14 150E
C13 47K
C12 47K
R13 560E
R12 82K
TR4 AF117N
C11 47K
R11 18K
L9
L8
C10 82E
L7
L6
L5
C9 150E
C8 47K
R10 1K2
TR 3 AF117N
C7 47K
R9 82K
L4
L3
C6 82E
L2
L1
C5 3K6
R8 15K
R7 18K
R6 10E
R5 1K2
TR 2 AF116N
C3 22K
C4 47K
R4 82K
R3 15K
C1 47K
TR1 AF116N
C2 10K
R2 10E
R1 1K5
L15
L14
L13
NEG.
OSCILLATOR
BASE
AVC
RED SPOT
COLLECTOR
SHIELD
BASE
EMITTER
TRANSISTOR CONNECTION
OSC. COIL & IFT CONNECTIONS
IFT1-1
IFT1-2
IFT2-2
IFT2-1
IFT3
TR1
TR2
TR3
TR4
NEGATIVE
INPUT BASE
AVC
OSCILLATOR
OSC. COIL
DETECTOR OUTPUT
VIEW FROM COMPONENT SIDE OF BOARD
RESISTORS ARE ±10% UNLESS INDICATED OTHERWISE
VOLTAGES MEASURED WITH V.T.V.M.- INPUT BASE & AVC TERMINALS SHORTED
ALL TRANSISTOR SHIELD LEADS ARE CONNECTED TO NEGATIVE.

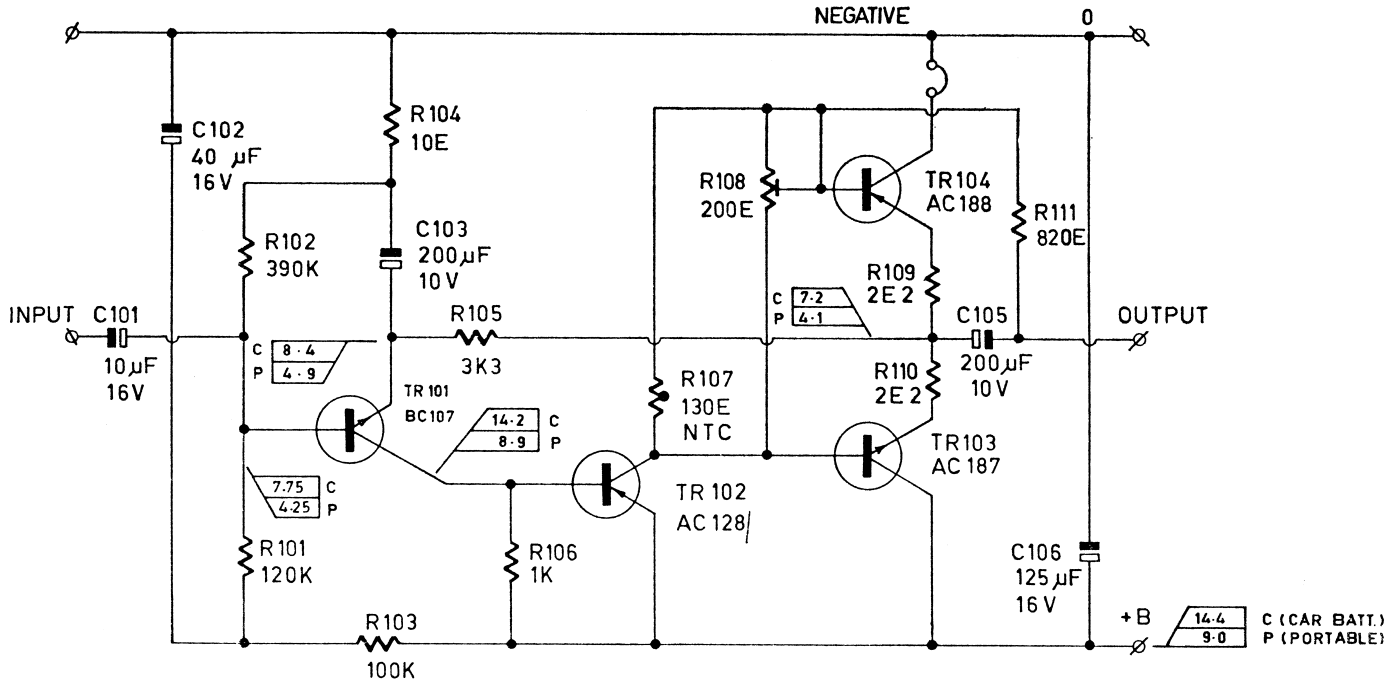

NOTE ON CONDENSERS:
WHOLE NUMBERS – pF UNLESS INDICATED OTHERWISE
TOLERANCE POLYESTERS: ± 10%
TOLERANCE ELECTROLYTICS: – 10 + 50%

VOLTAGES MEASURED WITH VTVM
15 OHM LOAD CONNECTED

ZERO SIGNAL COLLECTOR CURRENT TR103 / TR104
IS SET BY MEANS OF R108 TO 3·0 mA AT 75° F AT 9V

COLLECTOR PNP: RED SPOT
COLLECTOR NPN: BLUE SPOT

RESISTORS ARE ± 10% UNLESS INDICATED OTHERWISE

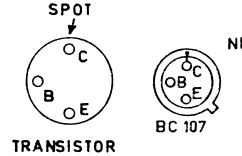

TRANSISTOR CONNECTIONS

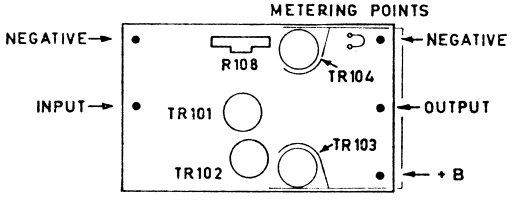

VIEW FROM COMPONENT SIDE OF BOARD

PA4

ELECTRICAL PARTS LIST

CAPACITORS

C. No.	DESCRIPTION	V.W.	TOL. ±%	TYPE OR CODE No.
1	47K ceramic	25	+80—20	Ducon CDR
2	10K ceramic	25	+80—20	Ducon CDR
3	22K ceramic	25	+80—20	Ducon CDR
4	47K ceramic	25	+80—20	Ducon CDR
5	3K6 Styroflex	100	5	C.285.AA/B3K6
6	Part of 1st I.F.T.			
7	47K ceramic	25	+80—20	Ducon CDR
8	47K ceramic	25	+80—20	Ducon CDR
9	Part of 2nd I.F.T.			
10	Part of 2nd I.F.T.			
11	47K ceramic	25	+80—20	Ducon CDR
12	47K ceramic	25	+80—20	Ducon CDR
13	47K flat foil	40	20	C.280.AA/P47K
14	Part of 3rd I.F.T.			
15	8M electrolytic	4	—	C.426.AS/B8
16	3K3 ceramic, pin up	500	+50—20	C.322.BA/H3K3
17	47K ceramic	25	+80—20	Ducon CDR
18	3K3 ceramic, pin up	500	+50—20	C.322.BA/H3K3
19	10M electrolytic	16	—	C.426.AR/E10
101	1M electrolytic	40	—	C.426.AS/G1
102	10M electrolytic	16	—	C.426.AR/E10
103	200M electrolytic	10	—	C.426.AR/D200
105	200M electrolytic	10	—	C.426.AR/D200
106	125M electrolytic	16	—	C.426.AR/E125
201	10K Polyester	160	10	C.296.AA/A10K
202	15E ceramic, NPO	500	10	C.304.GB/A15E
203	20E film trimmer	—	—	C.010.EA/20E
204	20E film trimmer	—	—	C.010.EA/20E
205, 206	Tuning capacitor	—	—	CZ.107.103
207	20E film trimmer	—	—	C.010.EA/20E
208	230E Styroseal	100	2	Ducon DFB
209	82K Polyester	160	10	C.296.AA/A82K
210	3E3 ceramic, NPO	500	0.5pF	C.304.GB/L3E3
211	1000M electrolytic	18	—	MK.185.52
212	125M electrolytic	10	—	C.426.AR/D125
213	27K Polyester	160	10	C.296.AA/A27K
214	1K2 Styroseal	50	2.5	Ducon DFB
215	5K6 Polyester	400	10	C.296.AC/A5K6

RESISTORS

R. No.	DESCRIPTION	W.	TOL. ±%	TYPE OR CODE No.
1	1K5 cracked carbon	1/8	10	B8.031.04NB/A1K5
2	10E cracked carbon	1/8	10	B8.031.04NB/A10E
3	15K cracked carbon	1/8	10	B8.031.04NB/A15K
4	82K cracked carbon	1/8	10	B8.031.04NB/A82K
5	1K2 cracked carbon	1/8	10	B8.031.04NB/A1K2
6	10E cracked carbon	1/8	10	B8.031.04NB/A10E
7	18K cracked carbon	1/8	10	B8.031.04NB/A18K
8	15K cracked carbon	1/8	10	B8.031.04NB/A15K
9	82K cracked carbon	1/8	10	B8.031.04NB/A82K
10	1K2 cracked carbon	1/8	10	B8.031.04NB/A1K2
11	18K cracked carbon	1/8	10	B8.031.04NB/A18K
12	82K cracked carbon	1/8	10	B8.031.04NB/A82K
13	560E cracked carbon	1/8	10	B8.031.04NB/A560E
14	1K5 cracked carbon	1/8	10	B8.031.04NB/A1K5
15	12K cracked carbon	1/8	10	B8.031.04NB/A12K
16	10K cracked carbon	1/8	10	B8.031.04NB/A10K
17	1K cracked carbon	1/8	10	B8.031.04NB/A1K
18	18K cracked carbon	1/8	10	B8.031.04NB/A18K
101	220K cracked carbon	1/8	10	B8.031.04NB/A220K
102	390K cracked carbon	1/8	10	B8.031.04NB/A390K
103	10K cracked carbon	1/8	10	B8.031.04NB/A10K
104	10E metal oxide	1/4	10	E.017.BC/A10E
105	3K3 cracked carbon	1/8	10	B8.031.04NB/A3K3
106	1K cracked carbon	1/8	10	B8.031.04NB/A1K
107	130E NTC disc	1	10	E.201.BC/A130E
108	220E carbon potentiometer, pre-set (bias adj.)			E.086.AC/220E
109	2E2 metal oxide	1/4	10	E.017.BC/A2E2
110	2E2 metal oxide	1/4	10	E.017.BC/A2E2
111	820E cracked carbon	1/8	10	B8.031.04NB/A820E
201	47K carbon potentiometer, taper C (volume) with SPST switch (on/off)			CZ.034.141 Type E.088
202	220E carbon	1/2	10	IRC BTS
203	1K carbon	1/2	10	IRC BTS
204	1K carbon	1/2	10	IRC BTS

INDUCTORS

L. No.	DESCRIPTION	CODE No.
1, 2	Primary and coupling, 1st I.F.T.	CZ.651.000
3, 4	Secondary and coupling, 1st I.F.T.	CZ.651.001
5, 6, 7	Primary and coupling, 2nd I.F.T.	CZ.651.002
8, 9	Secondary and coupling, 2nd I.F.T.	CZ.651.001
10, 11, 12	3rd I.F. transformer	CZ.651.005
13, 14, 15	Oscillator coil	CZ.652.003
201	Aerial loading coil	A3.115.77
202, 203, 204	Aerial coil	CZ.323.104
205, 206	Rod aerial assy.	CZ.323.103
	Ferrocube rod for above	CS.152.428 cut to 5"
207	Internal speaker, 8Ω	940/AD2309SYD or CZ.161.030
208	Supply filter choke	3113.108.20470
209	External speaker	
	MSP 52866W-6.4LCC/15	CZ.162.552
	or Rola C64G/15	CZ.162.550