eurovox

SERVICE MANUAL

COMPUTERISED FULLY PROGRAMMABLE RADIO/CASSETTE
AM Stereo/FM Stereo long range High power 4-channel Dual 7-band electronic equalizer Dolby B/C NR and dbx Surround sound and Digital input

MCC-8280E

Printed in Japan Feb. '88 Modification Reserved

LOCATION OF CONTROLS

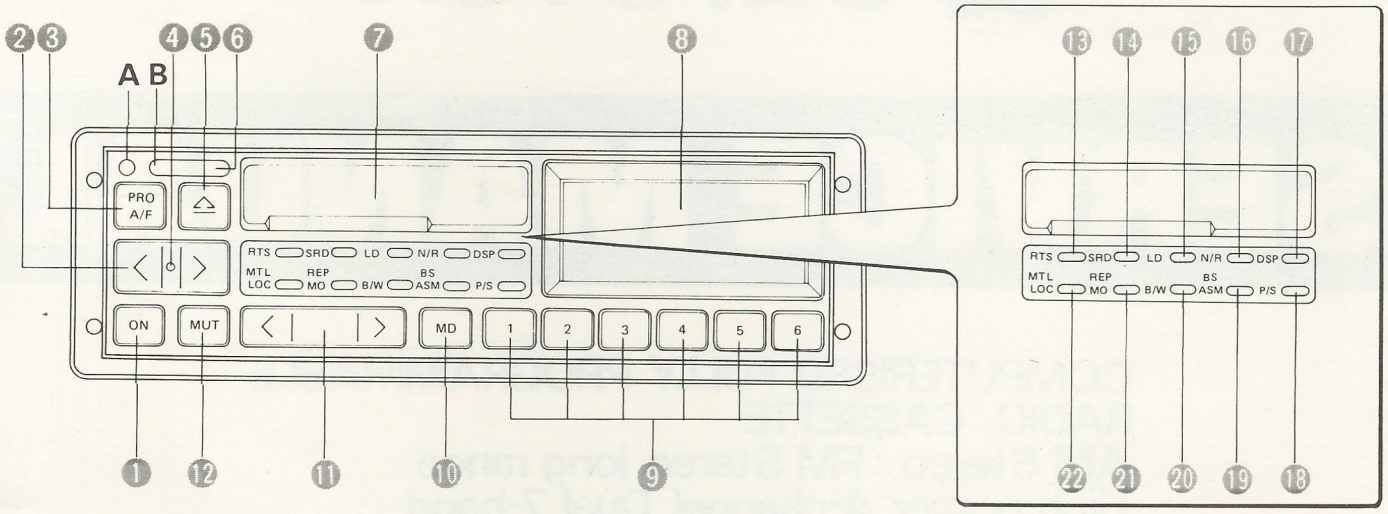

Note: A single button is used for two and sometimes more functions with switchover to different modes.

Ref. No.	Audio or for common use	Equalizer mode	Radio mode	Tape mode
1	Power On/Off Switch	Power On/Off Switch	Power On/Off Switch	Power On/Off Switch
2	Fader/Balance Selector	Fader/Balance Selector	Fader /Balance Selector	Fader/Balance Selector
	–	Equalizer Position Selector	Manual Turning Switch	Fast Forward/Fast Rewind Switch
	–	–	Automatic Seek Tuning Switch	Automatic Program Selection Switch (APS)
3	–	–	AM/FM Waveband Selector Switch	Program Selector Switch
				Fast Forward/Rewind Cancel Switch
4	–	–	Automatic Seek Tuning Indicator	Automatic Program Selection Indicator
5	–	–	–	Cassette Load/Eject Switch
6	Security Code Indicator	Security Code Indicator	Security Code Indicator	Security Code Indicator
7	–	–	–	Cassette Door
8	Multi-Matrix Window Display	Multi-Matrix Window Display	Multi-Matrix Window Display	Multi-Martix Window Display
9	Volume Memory Presets	Volume Memory Presets	Volume Memory Presets	Volume Memory Presets
	Fader-Balance Memory Presets	Fader-Balance Memory Presets	Fader-Balance Memory Presets	Fader-Balance Memory Presets
	–	Equalizer Curve Memory Presets	Station Memory Presets	APS Number Switch
	–	–	Automatic Stored Station Presets	–
10	Mode Selector	Mode Selector	Mode Selector	Mode Selector
11	Volume Up/Down	Volume Up/Down	Volume Up/Down	Volume Up/Down
	Fader Control (Front to Rear)	Fader Control (Front to Rear)	Fader Control (Front to Rear)	Fader Control (Front to Rear)
	Balance Control (Left to Right)	Balance Control (Left to Right)	Balance Control (Left to Right)	Balance Control (Left to Right)
	–	Front/Rear Mode Select Switch	–	–
	–	Equalizer Level Control Switch	–	–
12	Mute Switch	Mute Switch	Mute Switch	Mute Switch
13	–	–	Radio Tune/Seek Mode Selector	Tape Fast Forward/Rewind-APS Selector
14	Surround Effect Switch	–	Surround Effect Switch	Surround Effect Switch
15	Loudness Contour Switch		Loudness Contour Switch	Loudness Contour Switch
16	–	–	–	Noise Reduction Select Switch
17	Display Mode Priority Switch	Display Mode Priority Switch	Display Mode Priority Switch	Display Mode Priority Switch
18	–	–	Preset Station Scan	–
19	–	–	Automatic Station Store/ Address Selector	Program Blank Skip Switch
20	–	–	Band Width Selector Switch	–
21	–	–	Stereo/Mono Selector Switch	Program Repeat Playback Selector
22	–	–	Station Seek Sensitivity Selector	Metal Tape Selector

A ... LCD Visibility adjustor – Visibility Adjustment may be accomplished by your Eurovox dealer.
B ... Automatic Dimmer Sensor

Dolby-B/C NR – Noise Reduction manufactured under license from Dolby Laboratories Licensing Corporation. "Dolby" and the double-D symbol are trademarks of Dolby Laboratories Licensing Corporation. dbx – Is a trademark of dbx Incorporated. dbx noise reduction system manufactured under license from dbx Incorporated.

GENERAL INFORMATION

SEMICONDUCTORS: 32 ICs, 3 FETs, 75 Transistors, 69 Diodes, 24 LEDs, 2 Photo sensors

DESCRIPTION	REF. NO.	Q'TY	EQUIVALENT
(AM Radio)			
AM IC LA1135	IC801	1	
AM stereo decoder IC MC13020P	IC851	1	
IF amplifier transistor 2SC2458L (BL)	Q302, 308	2	2SC1815 (BL), 2SC2784 (K) or (E), 2SC2458 (BL)
Switching transistor DTA124ES	Q303	1	
Switching transistor 2SB822 (R) or (Q)	Q311	1	2SA881 (Q) or (R)
RF AGC transistor 2SC2814 (F4)	Q801, 803	2	2SC2716 (O), 2SC2619 (B)
Radio frequency amplifier FET 2SK163 (M)	Q802	1	2SK523 (M)
Switching transistor (W/M.N) 2SA1342	Q804	1	
IF amplifier transistor 2SC2814 (F4)	Q805	1	2SC2716 (O), 2SC2619 (B)
Phase inverter 2SC2458L (BL)	Q851	1	2SC1815 (BL), 2SC2784 (K) or (E), 2SC2458 (BL)
Switching transistor DTC144ES	Q852, 857	2	
Audio buffer transistor 2SC2603 (F) or (E)	Q853, 856	2	2SC2785 (E) or (F), 2SC536 (F) or (G), 2SC1740 (Q) or (R)
Switching transistor (MO/ST) 2SA1115 (E) or (F)	Q854	1	2SA1175 (E) or (F), 2SA933 (Q) or (R)
Buffer transistor 2SC2603 (F) or (E)	Q855	1	2SC2785 (E) or (F), 2SC536 (E) or (G)
Varactor diode SVC321SP	D801, 802, 803	3	1SV149
Switching diode 1SS110	D804, 805, 806, 807	4	1SS133, 1S1555
Voltage shift diode 1SS110	D808	1	1SS133, 1S1555
(FM Radio)			
IF IC LA1140	IC601	1	
NB.MPX IC STK3400A	IC602	1	
Switching transistor DTC144ES	Q301, 604	2	
Switching transistor 2SB822 (Q) or (R)	Q310	1	2SA881 (Q) or (R)
Radio frequency amplifier FET 3SK101 (GR)	Q501	1	3SK74
Mixer transistor 2SC2719	Q502	1	2SC2620
Oscillator transistor 2SC2714 (R)	Q503	1	2SC2714 (O) or (Y)
Oscillator buffer FET 3SK302	Q504	1	3SK360
Switching transistor DTC124ES	Q601	1	
IF amplifier transistor 2SC930 (D)	Q602, 603	2	2SC2787 (K) or (L)
Multipath interference detector 2SC2458L (BL)	Q605	1	
Varactor diode 1SV103	D501, 502, 503	3	SVC211
Protector diode 1SS133	D601	1	1S1588, 1S2076, MA165, GMA-01
Switching diode 1SS133	D602, 604, 606, 607	4	1S1588, 1S2076, MA165, GMA-01
Voltage shift diode TLR211	D603	1	
Voltage shift diode 1SS133	D605	1	1S1588, 1S2076, MA165, GMA-01
(Audio)			
Analogue switch IC HD14052BP	IC101, 404	2	HFE4052, TC4052, μPD4052
Electronic volume control IC LC7537	IC102	1	
Buffer amplifier IC LA6462S	IC103	1	
Power amplifier IC AN7171K	IC105, 106	2	
Dolby B/C IC HA12088ANT	IC401	1	
dbx IC AN6291	IC402	1	
Buffer amplifier IC M5218L	IC403	1	
Pre amplifier IC M51522L	IC651	1	
APS IC M51143AL	IC652	1	
Electronic volume (Equalizer) IC LC7523	IC701, 702	2	
Equalizer IC M5229P	IC703, 704, 705, 706	4	

DESCRIPTION	REF. NO.	Q'TY	EQUIVALENT
Auto high cut transistor 2SC2458L (BL)	Q101, 201	2	2SC1815 (BL), 2SC2784 (K) or (E), 2SC2458 (BL)
Phase shift transistor 2SC2458L (BL)	Q102, 202	2	2SC1815 (BL), 2SC2784 (K) or (E), 2SC2458 (BL)
Buffer amplifier transistor 2SC2458L (BL)	Q103, 104, 105, 106, 107, 108, 203, 204, 205, 206, 207, 208, 401, 451	14	2SC1815 (BL), 2SC2784 (K) or (E), 2SC2458 (BL)
AM/FM signal level buffer transistor 2SC2458L(BL)	Q151	1	2SC1815 (BL), 2SC2784 (K) or (E), 2SC2458 (BL)
Switching transistor (SAL control) DTC144ES	Q152, 153, 154	3	
Switching transistor (Metal) DTC124ES	Q651, 671	2	
Switching diode (Audio signal) 1SS133	D101, 102, 201, 202, 651, 671	6	1S1588, 1S2076, MA165, GMA-01
Detector diode (Level meter) MC931	D103, 203	2	
Switching diode 1SS133	D153, 156	2	1S1588, 1S2076, MA165, GMA-01
(PLL control)			
PLL IC LM7000	IC302	1	
Reset IC MN1280M	IC306	1	
Low pass filter 2SC2458L (BL)	Q305, 306	2	2SC1815 (BL), 2SC2784 (K) or (E)
(Regulator, others)			
Regulator μPD78L05	IC104, 303	2	
1 chip micro computer μPD75108	IC301	1	
Driver array M54530P	IC304	1	
BIP ROM TBP24SA10	IC305	1	
Regulator AN6540	IC307	1	
Switching transistor DTA144ES	Q156	1	
Switching transistor DTC144ES	Q157, 158, 159, 314	4	
Switching transistor 2SA1115 (E)	Q304, 315	2	2SA1175 (E) or (F), 2SA933 (Q) or (R)
Switching transistor 2SC2603 (F)	Q307, 313	2	2SC2785 (E) or (F), 2SC536 (F) or (G)
Switching transistor DTA124ES	Q309, 316, 317	3	
Switching transistor 2SC1846 (R)	Q312	1	
Switching transistor 2SB822 (R)	Q318	1	2SA881 (Q) or (R)
Switching transistor UN4210	Q319, 320, 652	3	
Switching transistor 2SB1099 (L)	Q321	1	
Switching transistor DTC124ES	Q322, 323	2	
Switching transistor 2SC2458L (BL)	Q324	1	2SC1815 (BL), 2SC2784 (K) or (E), 2SC2458 (BL)
Switching diode 1SS133	D151, 301, 302, 303, 305, 307, 309, 310 313, 314, 315, 317, 318, 320, 321, 322, 323, 325, 326, 327	20	1S1588, 1S2076, MA165, GMA-01
Zener diode HZ6 (A3)	D152	1	HZ6 (C3), EQA02-06 (AB), MA306 (A)
Voltage shift diode 1SS133	D154, 308	2	1S1588, 1S2076, MA165, GMA-01
Zener diode RD4.3E (B2)	D155, 311, 319, 403	4	
Switching diode MC921	D304	1	
Zener diode EQA02-09 (SA)	D312	1	MZ309, RD10E (B1), HZ9 (C2)
Protector diode GP30B	D316	1	
Switching diode GP30B	D324	1	
Switching diode MC911	D328, 329	2	
Protector diode MC921	D401	1	

DESCRIPTION	REF. NO.	Q'TY	EQUIVALENT
Protector diode MC911	D402	1	
(Mechanism control)			
FG servo IC M51971FP	IC51	1	
Motor drive transistor 2SC1846 (R)	Q51	1	
Switching transistor DTA124ES	Q52	1	
Photo sensor (Tape end sensor)	PT51, 52	2	
(LCD display)			
LCD drive IC μPD7228AG	IC1,2	2	
Temperature compensation transistor 2SA812 (M6)	Q1	1	2SA1115 (E) or (F), 2SA1175 (E) or (F)
Switching transistor 2SC1623 (L6)	Q2	1	2SC2603 (E) or (F), 2SC536 (F) or (G)
Switching diode RLS73	D1, 2, 3, 4, 5, 6, 7	7	
Auto/Manual LED BR1102W	LED1	1	
Anti theft LED BR4524K	LED2	1	
Back lighting LED (Orange and Green) AABG1201W	LED3, 4, 5, 6, 7, 8, 9, 10, 11, 12, 13, 14, 15, 16, 17, 18, 19, 20, 21, 22	20	
LCD back lighting LED BU1Z16	LED23	1	

INPUT AND OUTPUT

Indication	For Connection of:	Sensitivity	Impedance	Type of Socket	Connections
Antenna receptacle	Car radio aerial	1μV-3V	75 ohm		Aerial
7P DIN socket	Power amplifier unit or graphic equalizer	1. 2V 2. 0V 3. 2V 4. 2V 5. 2V 6. 0V 7. 14V DC	1. 600 ohm 2. – 3. 600 ohm 4. 600 ohm 5. 600 ohm 6. – 7. –		1. Left front 2. Ground 3. Left rear 4. Right front 5. Right rear 6. Ground 7. Power switching voltage output (+)
4P socket	Compact disc	1. 14V DC 2. 14V DC 3. 14V DC 4. 14/0V DC 5. 0V	1. – 2. – 3. – 4. – 5. –		1. Backlight +14V (Output)/Orange 2. Backlight +14V (Output)/Orange 3. +14V (Output)/Red 4. On/Off control (Output)/Brown 5. Ground/Black
	Night illumination	1. 14V DC 2. 14V DC 3. 14V DC	1. – 2. – 3. –		1. Green backlight (Input)/Green 2. Orange backlight (Input)/Orange 3. Backlight +14V (Output)/Orange
RCA socket	Compack disc	1. 300-2000mV 2. 300-2000mV	1. 10k ohm 2. 10k ohm		1. Right channel (Input)/Red 2. Left channel (Input)/White
13P plug	Output speaker Left CH and Right CH	20W	4 ohm		1. Front right (+)/White 2. Front left (+)/Green 5. Rear right (+)/Yellow 6. Rear left (+)/Blue 7. Front right (–)/White (Black) 8. Front left (–)/Green (Black) 12. Rear right (–)/Yellow (Black) 13. Rear left (–)/Blue (Black)
	+14V Car accessory fuse box	3. 14V DC	3. –		3. Acc. +14V DC (Input)/Red
	Small light switch	4. 14V DC	4. –		4. +14V DC (Input)/Orange
	+14V Car battery	9. 14V DC	9. –		9. Back up +14V (Input)/Pink
	Electric antenna	10. 14V DC (Max. 500mA)	10. –		10. 14V (Output)/Grey
	Ground (car chassis)	11. –	11. –		11. Ground/Black

WIRING LAYOUT

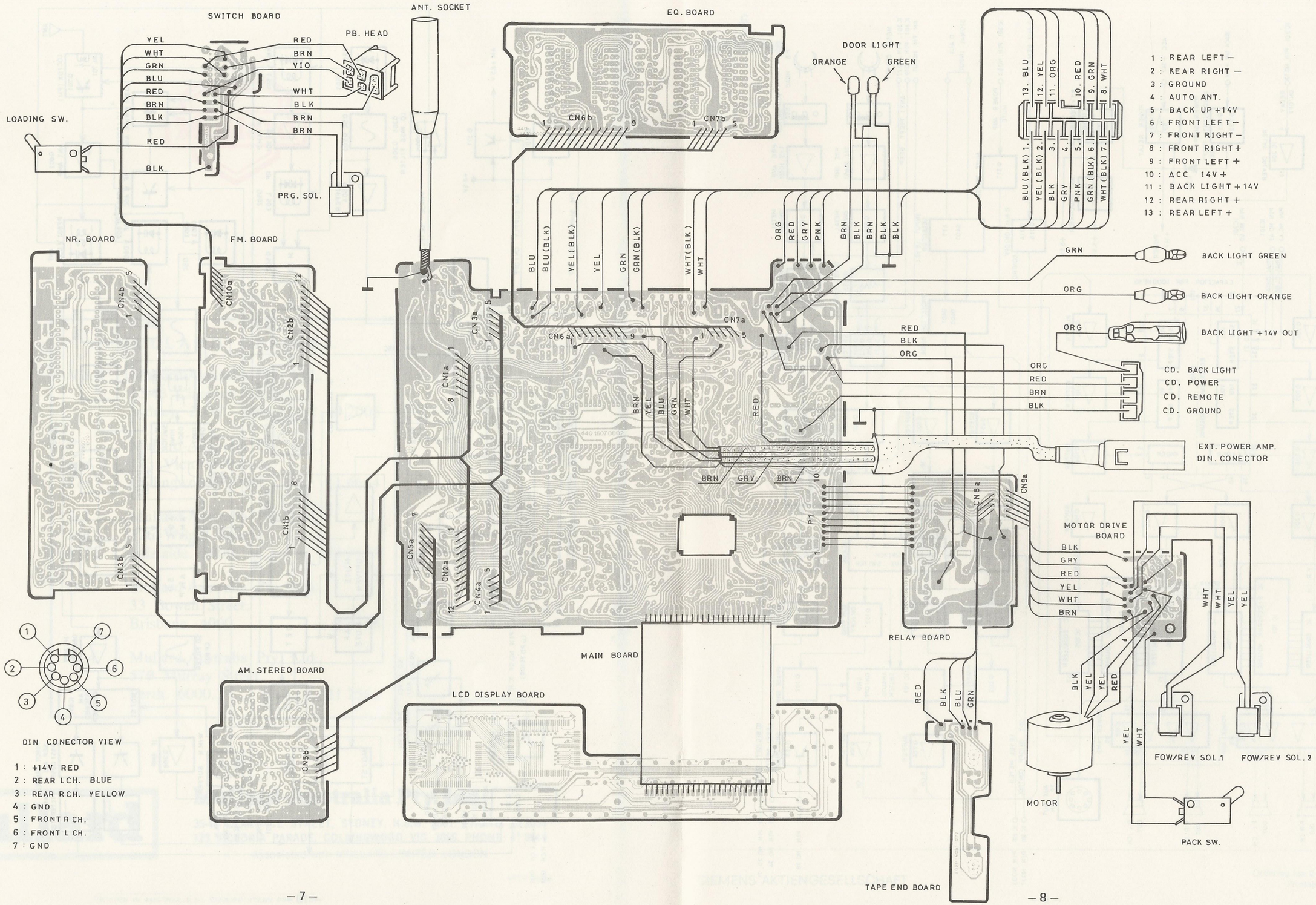

CIRCUIT FUNCTION DIAGRAM (AUDIO)

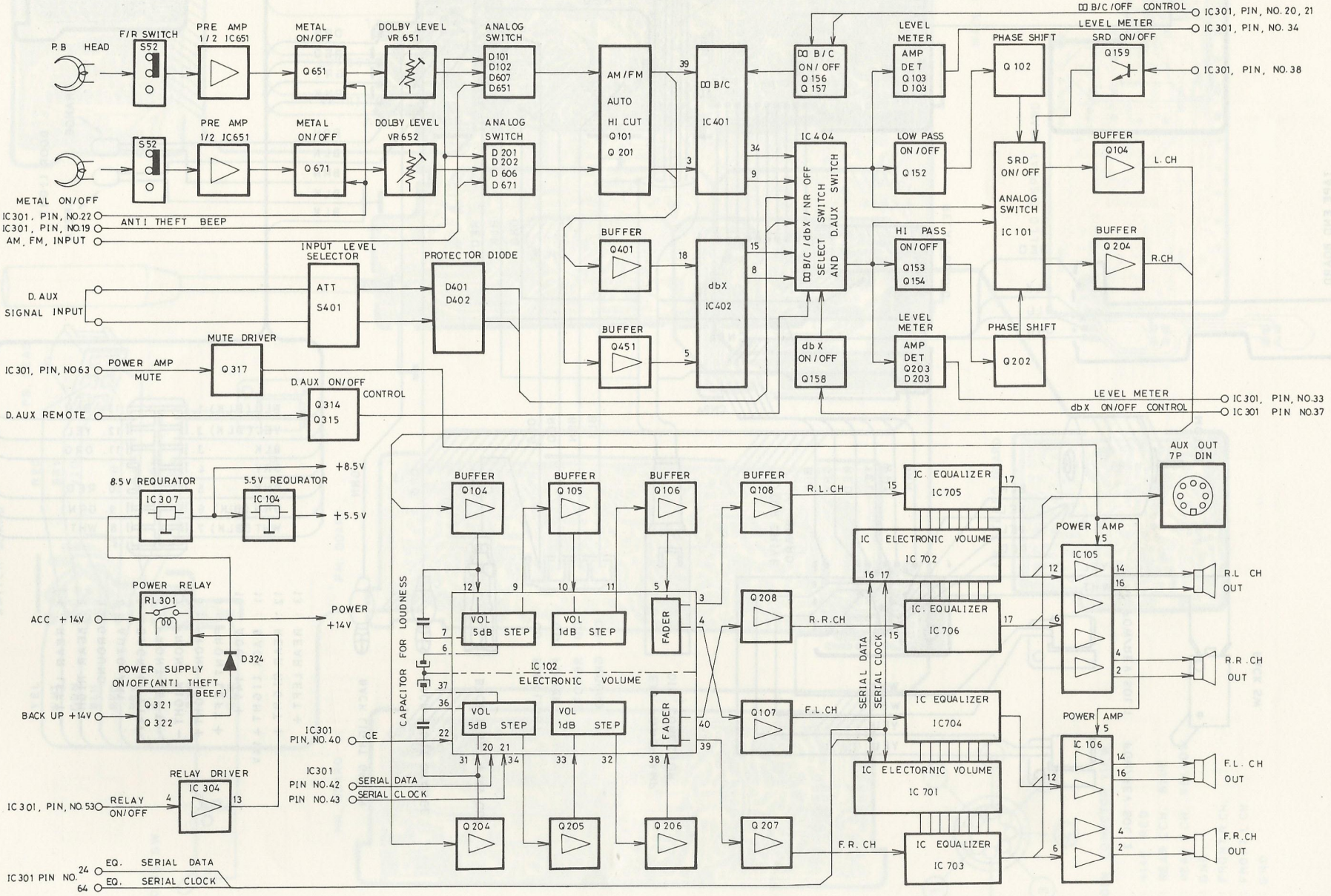

CIRCUIT FUNCTION DIAGRAM (AM/FM RADIO)

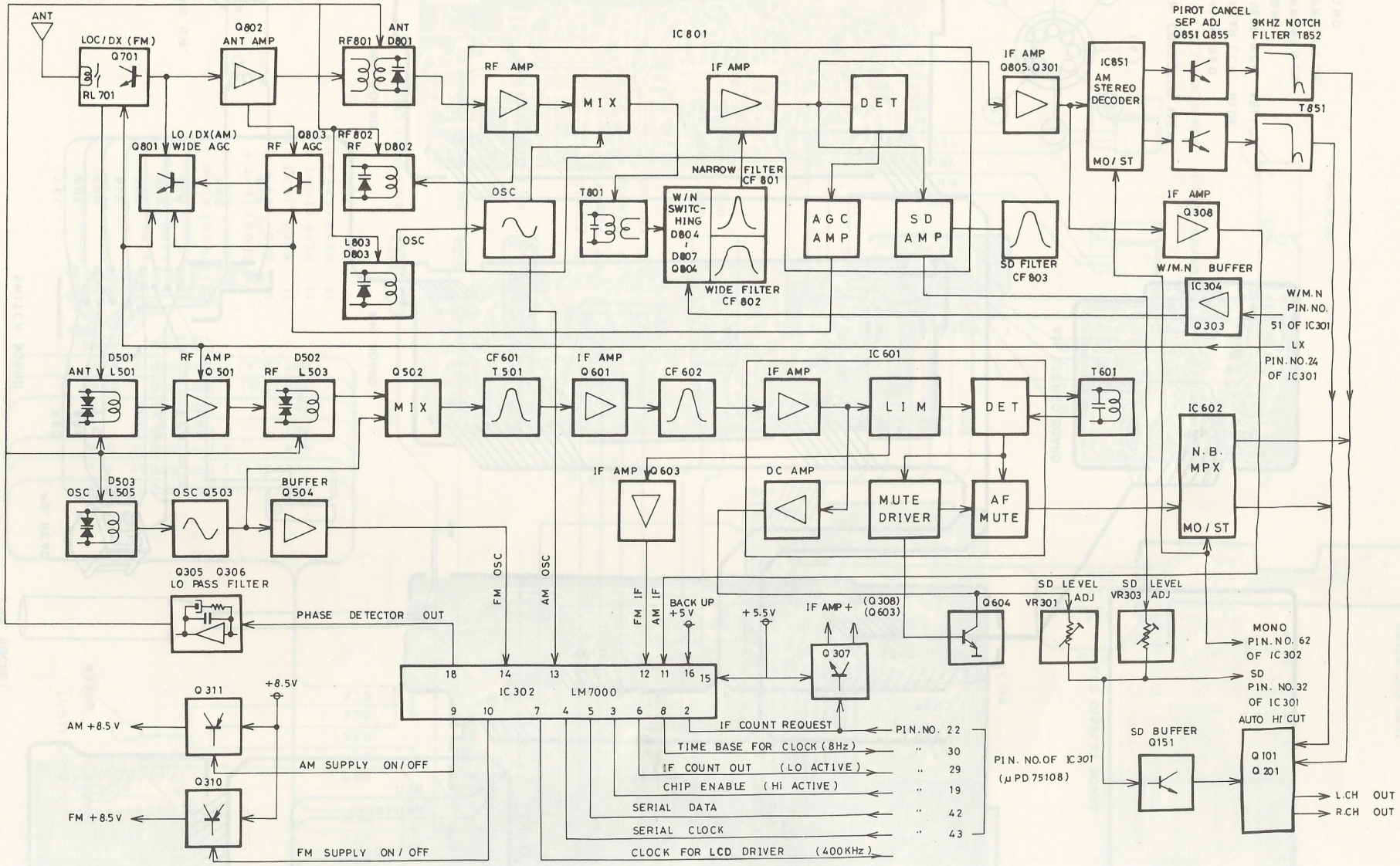

CIRCUIT FUNCTION DIAGRAM (LCD DRIVE & MECHANISM CONTROL)

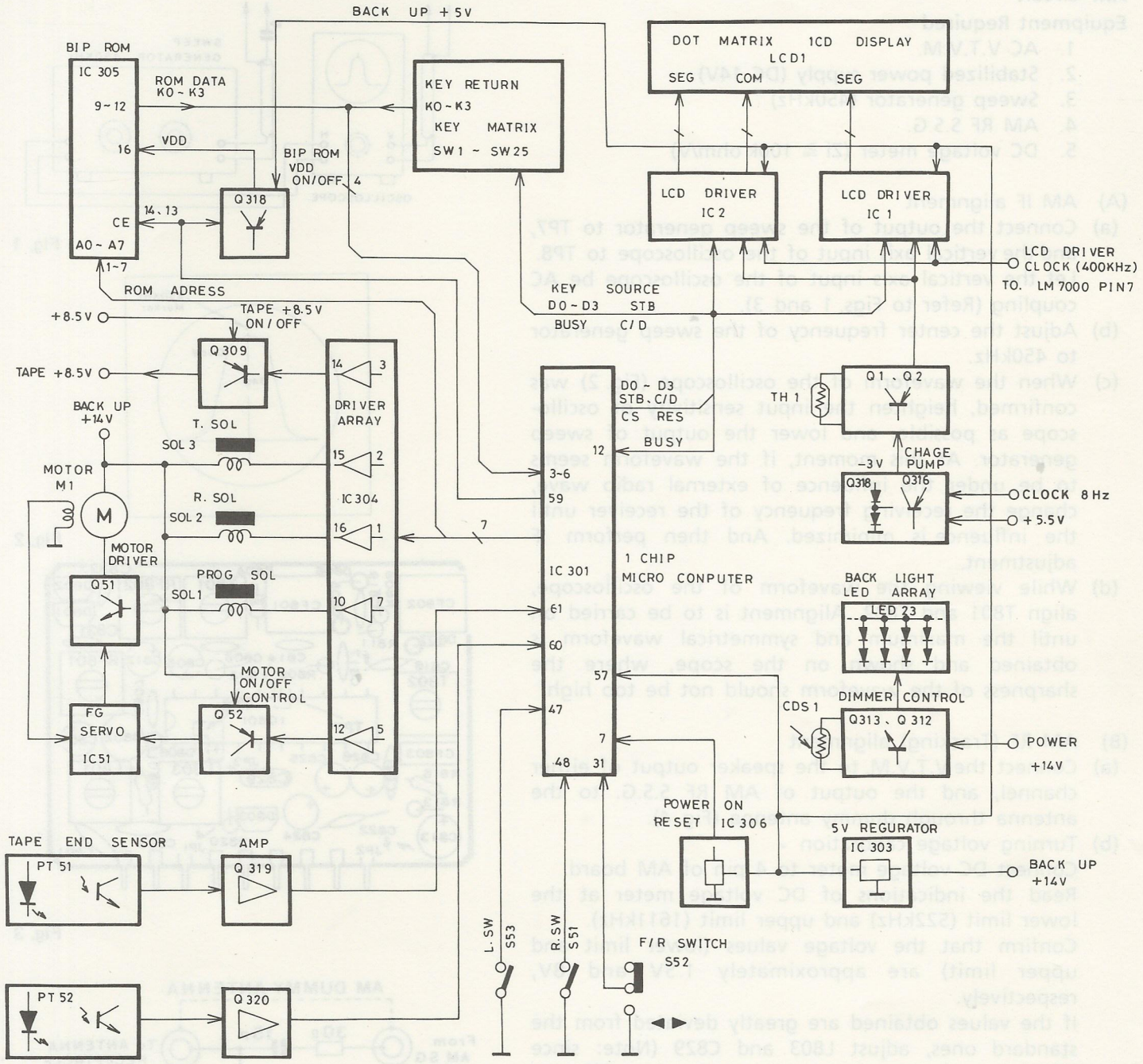

SERVICE ALIGNMENT PROCEDURE

RADIO SECTION

AM Circuit

Equipment Required

1. AC V.T.V.M.
2. Stabilized power supply (DC 14V)
3. Sweep generator (450kHz)
4. AM RF S.S.G.
5. DC voltage meter (Zi ≧ 100k ohm/V)

(A) AM IF alignment

(a) Connect the output of the sweep generator to TP7, and the vertical axis input of the oscilloscope to TP8. Let the vertical axis input of the oscilloscope be AC coupling (Refer to Figs. 1 and 3).

(b) Adjust the center frequency of the sweep generator to 450kHz.

(c) When the waveform of the oscilloscope (Fig. 2) was confirmed, heighten the input sensitivity of oscilloscope as possible, and lower the output of sweep generator. At this moment, if the waveform seems to be under the influence of external radio wave, change the receiving frequency of the receiver until the influence is minimized. And then perform IF adjustment.

(d) While viewing the waveform of the oscilloscope, align T801 and T802. Alignment is to be carried on until the maximum and symmetrical waveform is obtained and shown on the scope, where the sharpness of the waveform should not be too high.

(B) AM RF (Tracking) alignment

(a) Connect the V.T.V.M. to the speaker output of either channel, and the output of AM RF S.S.G. to the antenna through dummy antenna (Fig. 4).

(b) Turning voltage calibration
Connect DC voltage meter to 4 pin of AM board.
Read the indications of DC voltage meter at the lower limit (522kHz) and upper limit (1611kHz).
Confirm that the voltage values (lower limit and upper limit) are approximately 1.5V and 8V, respectively.
If the values obtained are greatly deviated from the standard ones, adjust L803 and C829 (Note: since C829 is a fixed capacitor, replacing a different capacity of capacitor is necessary).

(c) Set the frequency of S.G. to 603kHz exactly. Let the output level be the level of AGC being not working (less than 30μV). Set the tuning of the receiver to 603kHz. Place BX switch of the receiver in the OFF position, and let VOL be near the maximum.

(d) Align RF801 (ANT coil) and RF802 (RF coil) to obtain the maximum output. At this moment, the core positions of RF801 and RF802 should be memorized.

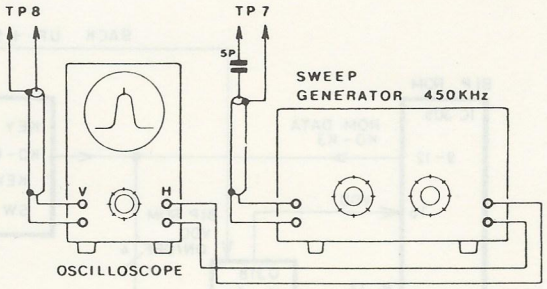

Fig. 1

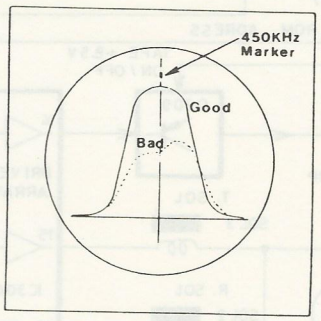

Fig. 2

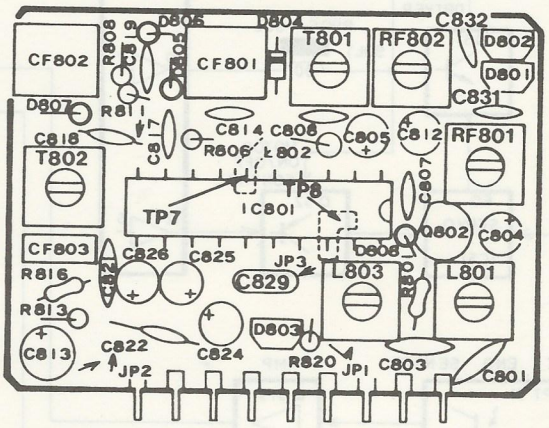

Fig. 3

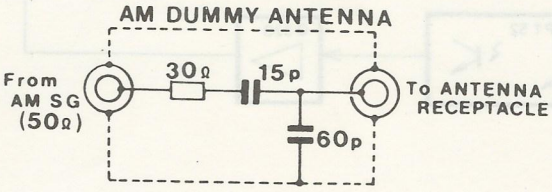

Fig. 4

(e) Set the frequency of S.G. to 1404kHz, and the tuning of the receiver to 1404kHz also. Move RF801 and RF802 to observe the direction in which the output becomes great.
If the output becomes great in the direction of the cores of RF801 and RF802 being come off, replace C831 and C832 with capacitors having smaller capacity, and then return to procedure (c). To the contrary, if the cores move to the opposite direction, replace C831 and C832 with capacitors having greater capacity.

(f) Repeat the above mentioned procedure several times. (Ensure that Quieting Sensitivity is within the specification).

Note:

1. If RF801 and RF802 are shifted slightly, align L803 to obtain the maximum sensitivity. And at this moment, ensure that the upper limit and lower limit of tuning voltage should be in the range of 1V – 8.5V.
2. Since D801, D802 and D803 are used as a single set, these three components should be replaced at the same time even if only one of the three is defective.
3. At the beginning, when power supply is provided, the pre-set address 1, 4, and 6 on the microprocessor of PLL used in this machine will be automatically pre-set to 1404kHz, 999kHz and 603kHz respectively.

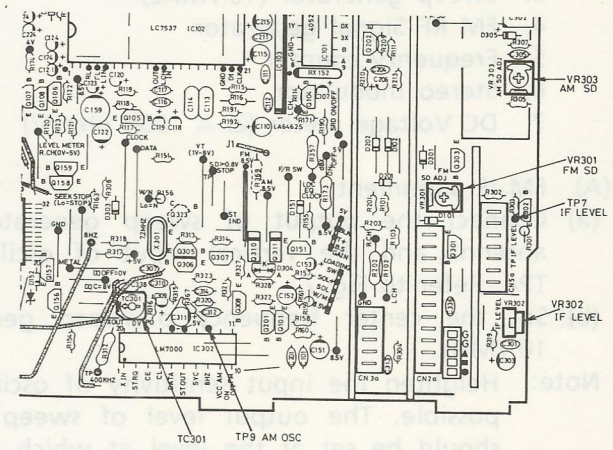

Fig. 5

AM Stereo Circuit

(C) AM IF alignment

(a) Set the frequency of S.G. to 999kHz and set the output level to 5mV (no modulation).

(b) Tuning of the receiver to 999kHz and set the AC V.T.V.M. to the TP7.
Adjust VR302 for AM IF level adjustment in order to obtain 220mV of reading on the V.T.V.M.
Refer to Fig. 5.

(D) Separation alignment

(a) Set the output level of AM stereo RF signal generator to 1mV and set the modulator to 60% modulation (4% for pilot signal and 30% + 30% for 1kHz main signal L + R).

(b) Tune the mode selector of stereo modulator to only R channel. Align trimmer resistor VR852 to obtain maximum separation.

(c) Tune the mode selector of stereo modulator to only L channel. Align trimmer resistor VR851 to obtain maximum separation.

(E) Pilot cancel alignment
Tune the mode selector of stereo modulator to only pilot signal. Align trimmer resistor VR853 to obtain the minimum indication of leak component at 25Hz on the AC V.T.V.M. Refer to Fig. 6.

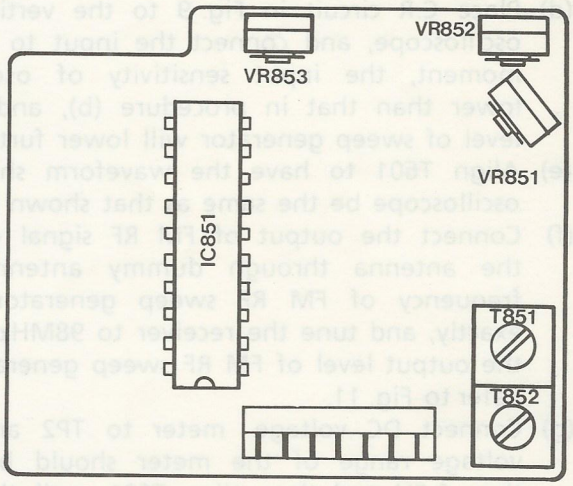

Fig. 6

FM Circuit

Equipment Required

1. AC V.T.V.M.
2. Stabilized power supply (DC 14V)
3. Sweep generator (10.7MHz)
4. FM RF Signal generator
5. Frequency counter
6. Stereo modulator
7. DC Voltage meter (Zi ≧ 100k ohm/V)

(A) FM IF alignment

(a) Connect the output of sweep generator to the antenna, and the vertical input of oscilloscope to TP4. Refer to Fig. 7.

(b) Set the center frequency of sweep generator to 10.7MHz.

Note: Heighten the input sensitivity of oscilloscope as possible. The output level of sweep generator should be set at the level at which the limiter of IF amplifier can not be working.

(c) Align T501 in order that the waveform of the oscilloscope may be the same as that shown in Fig. 8. The amplitude of the waveform should be maximum and symmetrical with respect to the vertical axis, and the end portion should be round shaped.

(d) Place C.R circuit in Fig. 9 to the vertical input of oscilloscope, and connect the input to TP5. At this moment, the input sensitivity of oscilloscope is lower than that in procedure (b), and the output level of sweep generator will lower further.

(e) Align T601 to have the waveform shown on the oscilloscope be the same as that shown in Fig. 10.

(f) Connect the output of FM RF signal generator to the antenna through dummy antenna. Set the frequency of FM RF sweep generator to 98MHz exactly, and tune the receiver to 98MHz as well. Let the output level of FM RF sweep generator be 1mV. Refer to Fig. 11.

(g) Connect DC voltage meter to TP2 and TP3. The voltage range of the meter should be set lower than 0.5V and then align T601 until the indication of voltage meter is at 0V.

(B) FM RF board alignment

(a) Connect FM RF S.G. to the antenna of the receiver through dummy antenna, and AC V.T.V.M. to the speaker output of either channel.

(b) Set the output level of FM RF signal generator to 3μV, and modulation to 1kHz deviation (30%). Adjust VOL of the receiver to the adequate position in accordance with indication of AC V.T.V.M.

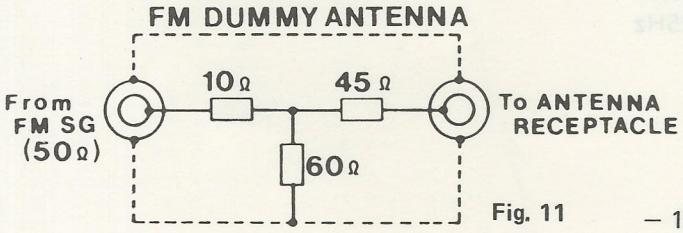

Fig. 11

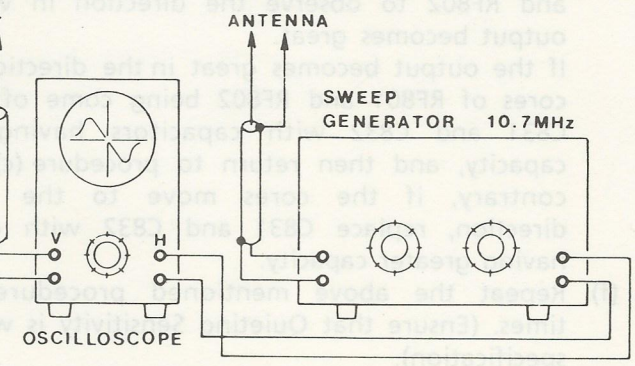

Fig. 7

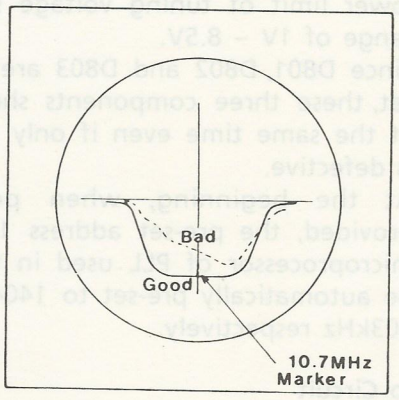

Fig. 8

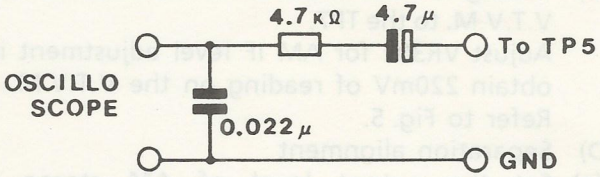

Fig. 9

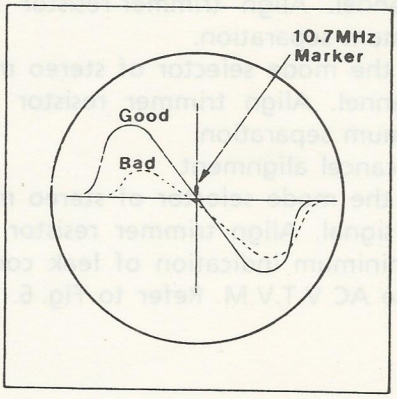

Fig. 10

(c) Tuning voltage calibration
Connect DC voltage meter to terminal No. F4 of FM RF. Set the tuning of the receiver to 87.9MHz. Record the reading of DC voltage meter, then change the tuning of the receiver to 107.9MHz and in turn record the reading of DC voltage meter. Confirm that the two voltage values are to be approximately 1.5V and 7V, respectively. If the values indicated are greatly deviated from the standard ones, adjust L505 and C513. Refer to Fig. 12.

Note: Since 1.2V and 9V are the allowably extreme values, re-confirmation must be made should L505 or C513 be moved for further alignment.

(d) Tune the frequency of FM RF signal generator to 90MHz exactly, and the tuning of the receiver to 90MHz as well. Align L501 (antenna coil) and L503 (RF coil) to obtain the maximum indication of the V.T.V.M.

(e) Tune the frequency of FM RF signal generator to 106MHz, and the tuning of the receiver to 106MHz as well. Move L501 and L503 to observe the reading of the V.T.V.M. If the indication of the V.T.V.M. increases when the density of coils winding decreases (becomes coarse), replace C503 and C505 with other capacitors having smaller capacity, and then perform the alignment of procedure (d). To the contrary, when the density of coils winding increase (becomes dense), replace C503 and C505 with other capacitors having larger capacity.
Refer to Fig. 12.

(f) Repeat the alignment of procedure (d) and (e) to obtain the maximum indication of the V.T.V.M.

Note: Since C503, C505 and C513 are chip capacitors, soldering iron used in soldering prases should be of less than 30W, and the temperature of the iron tip should be less than 280°C. Do not touch ceramic part directly with iron tip when performing processing.

Note:
1. If the change of indication of the V.T.V.M. is only a bit when moving L501 and L503 for adjustment, adjust L505 at 90MHz to obtain maximum sensitivity.
2. The characteristics of D501, D502 and D503 are similar so that the three components should be replaced at the same time even if only one of the three is defective or damaged. Otherwise, the specified performance may not be obtained even the above mentioned adjustments are performed repeatedly.
3. At the beginning, when power supply is provided, the pre-set address buttons 1, 4 and 6 on the microprocessor of PLL used in this machine will be automatically pre-set to 106MHz, 98MHz and 90MHz respectively.

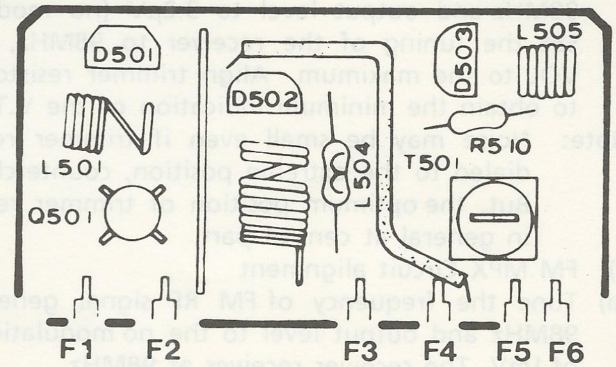

Fig. 12

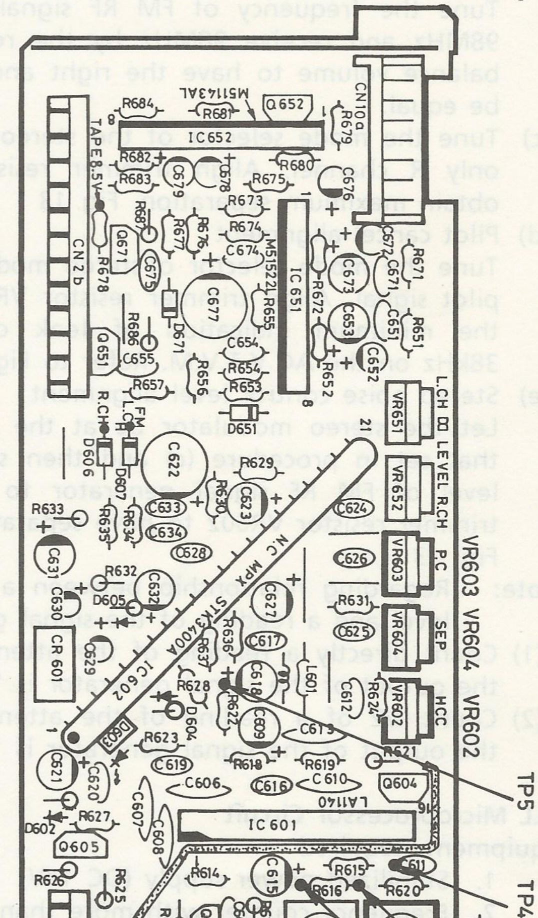

Fig. 13

(g) Gain adjustment
Tune the frequency of FM RF signal generator to 98MHz and output level to 3.2μV (no modulation). Set the tuning of the receiver to 98MHz, and set VOL to the maximum. Align trimmer resistor VR601 to obtain the minimum indication of the V.T.V.M.

Note: Noise may be small even if trimmer resistor is dialed to the extreme position, counterclockwise. But, the optimum position of trimmer resistor is, in general at central part.

(C) FM MPX Circuit alignment

(a) Tune the frequency of FM RF signal generator to 98MHz and output level to the no modulation value of 1mV. The receiver receives at 98MHz.

(b) MPX separation alignment
Set the output level of FM RF signal generator to 1mV, and set the modulator to 75kHz deviation (10% for pilot signal and 90% for 1kHz main signal L+R). Tune the frequency of FM RF signal generator to 98MHz and receive 98MHz by the receiver. Adjust balance volume to have the right and left volumes be equal.

(c) Tune the mode selector of the stereo modulator to only R channel. Align trimmer resistor VR604 to obtain maximum separation. Fig. 13

(d) Pilot cancel alignment
Tune the mode selector of stereo modulator to only pilot signal. Align trimmer resistor VR603 to obtain the minimum indication of leak component at 38kHz on the AC V.T.V.M. Refer to Fig. 5.

(e) Stereo noise control level alignment
Let the stereo modulator be at the same state as that set in procedure (c) and then set the output level of FM RF signal generator to 316μV. Align trimmer resistor VR602 to have separation of 20dB. Fig. 13

Note: Regarding relationship between a signal output level and a reading of the signal generator.

(1) Count directly a reading of the attenuator. In case the output of the signal generator is "Load type".

(2) Count 1/2 of a reading of the attenuator, in case the output of the signal generator is "Open type".

PLL Microprocessor Circuit

Equipment Required

1. Stabilized power supply (DC 14V)
2. Frequency counter with more than 7 digits

Adjustment in crystal oscillator frequency

(a) Connect the input of frequency counter to TP9. Place the band changeover switch of the receiver in AM position and set receiving frequency to 1404kHz. Refer to Fig. 5

(b) Align trimmer capacitor TC301 to have the indication of frequency counter be of 1854000Hz. Refer to Fig. 14

Note: If receiving frequency of the receiver is not 1404kHz, let the receiving frequency be added by 450kHz, by performing the alignment of TC301 (trimmer capacitor). Correctly perform the alignment; otherwise radio will be affected.

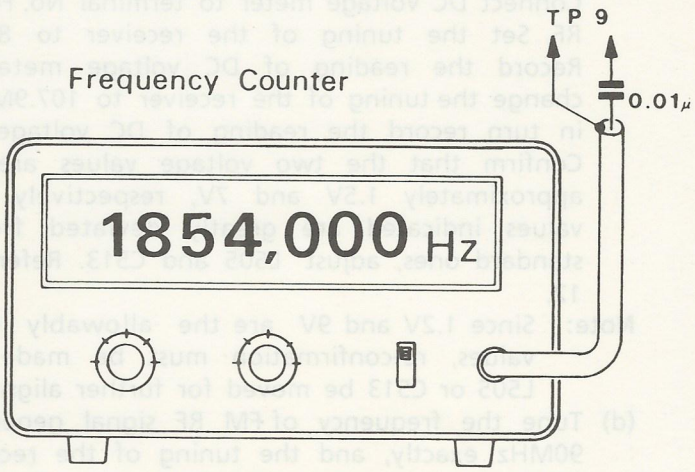

Fig. 14

AM/FM stop signal circuit alignment

Equipment Required

1. AM RF signal generator
2. FM RF signal generator
3. Stabilized power supply (DC 14V)
4. DC voltage meter

AM Circuit

Note: This adjustment is to be executed after completion of the adjustment of AM IF, RF and PLL circuit.

(a) Adjustment AM search stop sensitivity
Connect the DC voltage meter to pin No. 32 of IC301 (the voltage range of DC voltage meter is 2V range). And set the frequency of AM signal generator to 999kHz and set the output to 40μV.
While observing DC meter, align trimmer resistor VR303. The alignment is made until the indication of DC voltage 1.3V~1.5V. Refer to Fig. 5

FM Circuit

Note: This adjustment is to be executed after completion of the adjustment of FM IF RF and PLL circuit.

(a) Confirmation of search stop band
Connect the output of FM RF signal generator to the antenna, and DC voltage meter to pin No. 32 of IC301 (The voltage range of DC voltage meter is set at 5V). Let the output level of FM RF signal generator be of 1mV and set the frequency to 98MHz. Set the tuning of the receiver to 98MHz to confirm receiving condition.

(b) While observing the DC voltage meter, change the frequency of FM RF signal generator from the set frequency to higher frequency and to lower frequency. Record or memorize the frequencies at which the reading of DC voltage meter starts dropping.
Confirm that the differential of the two frequencies recorded or memorized is to be about 40~60kHz.
If these two frequencies are unbalanced, execute procedure (f) and (g) of (A) FM IF alignment again.

(c) Adjustment of FM search stop sensitivity
Set the frequency of FM RF signal generator to 98MHz and set the output to 14μV. While observing DC voltage meter, align trimmer resistor VR301. The alignment is made until the indication of DC voltage is of 0.7~0.9V. Refer to Fig. 5.

Dolby NR Circuit

Equipment Required

1. Audio frequency generator
2. Stabilized power supply (DC 14V)
3. AC V.T.V.M.
4. Dolby level calibration tape (TEAC MTT-5 or equivalent)
5. FM RF cassette tape
6. Stereo modulator

(A) Dolby tape level adjustment

(a) Playback Dolby level calibration tape.

(b) Set Dolby NR switch S14 to "IN" position and adjust the trimmer resistor VR651 (L ch) and VR652 (R ch) for tape level adjustment in order to obtain 300mV of reading on V.T.V.M. at the test point of TP201 (L ch) and TR301 (R ch).

(c) The difference of the level between Forward and Reverse directions of the tape transport/reproduction should be ± 1dB.

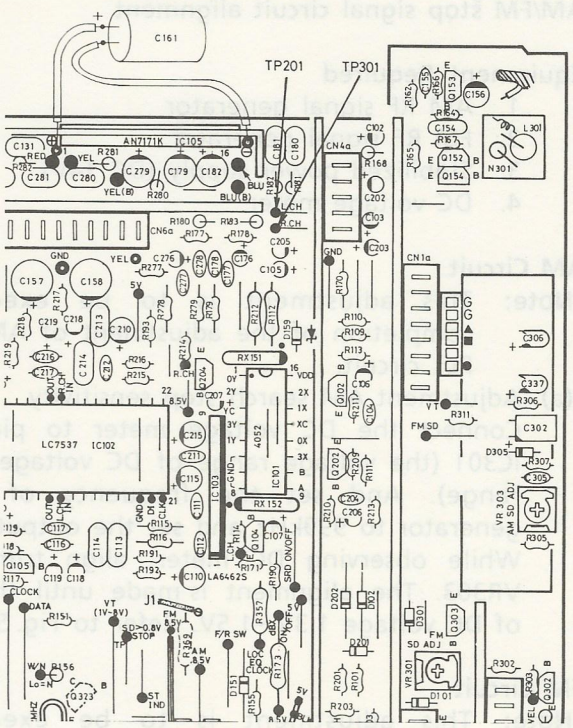

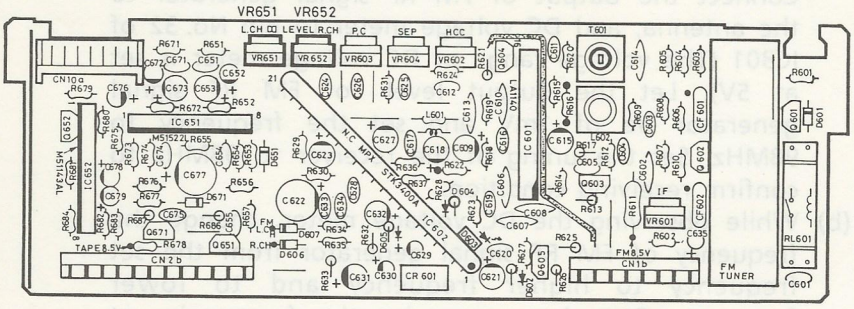

PIN CONNECTION IC301

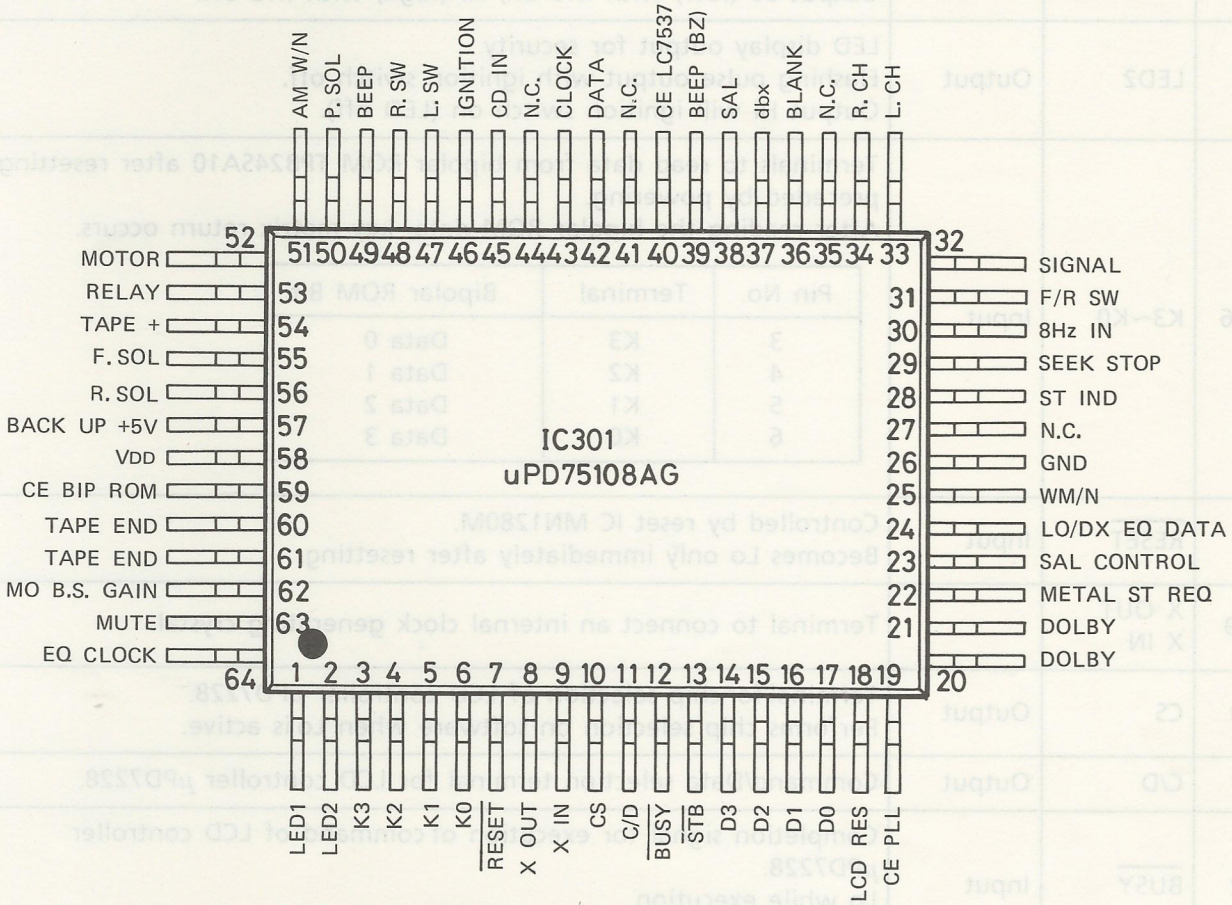

FUNCTION TABLE IC301

Pin No.	Terminal Name	Input/ Output	Function
1	LED1	Output	LED display output corresponding to RTS (Radio/Tape Seek). Output reversed by pushing RTS switch. Output Lo (low) with RTS on, Hi (high) with RTS off.
2	LED2	Output	LED display output for security. Flashing pulse output with ignition switch off. Output Hi will ignition switch on (LED off).
3~6	K3~K0	Input	Terminals to read data from bipolar ROM TPB24SA10 after resetting preceded by powering. After reading the bipolar ROM data, key matrix return occurs. Pin No. / Terminal / Bipolar ROM Bit 3 / K3 / Data 0 4 / K2 / Data 1 5 / K1 / Data 2 6 / K0 / Data 3
7	$\overline{\text{RESET}}$	Input	Controlled by reset IC MN1280M. Becomes Lo only immediately after resetting.
8, 9	X OUT X IN		Terminal to connect an internal clock generating crystal.
10	CS	Output	Terminal for chip selection of LCD controller μPD7228. Performs chip selection on software when Lo is active.
11	C/D	Output	Command/Data selection terminal for LCD controller μPD7228.
12	$\overline{\text{BUSY}}$	Input	Completion signal for execution of command of LCD controller μPD7228. Lo while execution. Pulses appear on BUSY terminal when LCD display changes.
13	$\overline{\text{STB}}$	Output	Strobe terminal to send command and data to LCD controller μPD7228 when Lo is active.
14~17	D3~D0	Output	Bus line to send command code and data to LCD controller μPD7228. Transmits data to LCD controller selected by CS by making STB terminal Lo after setting code to D0~D3.
18	LCD RES	Output	Terminal to reset LCD controller μPD7228. Transmits Hi after resetting preceded by powering. Transmits Lo while normal operation.
19	CE PLL	Output	Chip select control terminal for PLL IC LM7000.

Pin No.	Terminal Name	Input/ Output	Function
20 21	DOLBY	Output	DOLBY B/C OFF control terminal. Pin 20 / Pin 21 / Pin 37 / Pin 45 / Function Hi / Lo / Lo / Hi / DD B Lo / Lo / Lo / Hi / DD C Hi / Lo / Hi / Hi / dbx X / X / X / Lo / CD (DIGITAL Aux.) Hi / Hi / Lo / Hi / NR OFF X ; don't care
22	METAL ST REQ	Output	Metal tape on/off control terminal in tape mode operation; metal off at Lo, metal on at Hi. Search stop request control terminal in radio mode operation; request rejected at Lo, accepted at Hi.
23	SAL CONTROL	Output	Surround control terminal (controls high pass and low pass filters); Lo in tape mode, and Hi in radio mode.
24	LO/DX EQ DATA	Output	LO/DX: Lo while receiving in radio mode, and Hi while searching with RTS active. Lo in tape mode. EQ DATA: Data output terminal to transmit serial data to equalizer IC.
25	WM/N	Output	Output terminal for band width selection in radio mode. Transmits Lo level for narrow band for both AM and FM.
26	GND		Ground (0V).
27	N.C.		
28	ST IND	Input	Stereo indicator signal input terminal in radio mode; stereo at Lo, mono at Hi.
29	SEEK STOP	Input	Input terminal for IF counting signal of PLL IC LM7000 during SEEK operation in radio mode. Receive Lo when IF counting is locked during SEEK, ASM operation.
30	8Hz IN	Input	Signal source for clock. Receives 8Hz from LM7000.
31	F/R SW	Input	Input terminal for tape running direction signal, effective in tape mode.
32	SIGNAL	Input	Signal strength input terminal for SEEK and ASM in radio mode.
33	L.CH	Input	Audio level input terminal for L channel.
34	R.CH	Input	Audio level input terminal for R channel.
35	N.C.		
36	BLANK	Input	Input terminal for scanning blank space between songs in tape mode; Lo: song, Hi: blank.

Pin No.	Terminal Name	Input/ Output	Function
37	dbx	Output	dbx control terminal in tape mode. Refer to pin 20 and 21 for operation mode.
38	SAL	Output	Surround control terminal A push of SRD switch allows changeover of ON/OFF; surround is on at Lo, off at Hi.
39	BEEP (BZ)	Output	Terminal to issue beep sound when operation is changed by key input.
40	CE LC7537	Output	Chip select terminal for electronic volume control IC LC7537, Hi active.
41	N.C.		
42	DATA	Output	Data output terminal to transmit serial data to PLL IC LM7000 and volume control IC LC7537.
43	CLOCK	Output	Clock output terminal to transmit serial data to PLL IC LM7000 and volume control IC LC7537.
44	N.C.		
45	CD IN	Input	Lo is received when auxiliary input terminal is active. Refer to pin 20 and 21 for operation mode.
46	IGNITION	Input	Ignition switch test input. Hi with the switch on, Lo with the switch off. Used for 12 sec. pack hold in tape mode and switching into security mode.
47	L.SW	Input	Cassette pack presence/absence test input.
48	R.SW	Input	Cassette pack loading switch.
49	BEEP	Output	Output terminal to issue beep sound to audio circuit by fixing the fader and balance at center for 40 sec. with switch matrix on while executing security mode with ignition key off. Resetting the fader, balance and electronic volume to the previous value and stopping the beep sound are available by pushing the ignition key within 40 sec.
50	P.SOL	Output	Mechanical, program solenoid control output terminal. Program solenoid is on at Hi.
51	AM W/N	Output	Band width control terminal in AM mode. Wide : Lo level Mid : Hi level Narrow: Hi level
52	MOTOR	Output	Motor control output terminal. Motor stop at Lo.
53	RELAY	Output	Control terminal for power control relay. Relay is on at Hi.
54	TAPE +	Output	Tape/Radio power supply select terminal. Power supplied for Tape at Hi, for Radio at Lo.

Pin No.	Terminal Name	Input/ Output	Function
55 56	F-SOL R-SOL	Output Output	Mechanical, fast forward and rewind solenoid control terminal. Solenoid is on at Hi in tape mode.
57	BACK UP +5V	Input	Back up power testing terminal. Back up connected at Hi.
58	V_{DD}		+5V power source.
59	CE BIP ROM	Output	Chip select control terminal for bipolar ROM TPB24SA10. Transmits Lo level only immediately after resetting preceded by powering.
60 61	TAPE END TAPE END	Input Input	Tape end detection input terminal.
62	MO B.S. GAIN	Output	Mono control terminal in radio mode: stereo at Hi, mono at Lo: invariably Lo in AM Narrow mode. Blank skip gain select terminal in tape mode: gain down at Hi (in fast forward and rewind mode) and gain up at Lo (in play mode).
63	MUTE	Output	Mute control terminal for power amplifier; mute is off at Hi, mute is on at Lo.
64	EQ CLOCK	Output	Output terminal of a clock to transmit serial data to equalizer IC.

LM7000

PLL AND IF COUNT

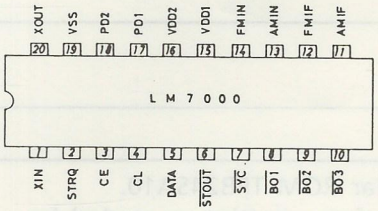

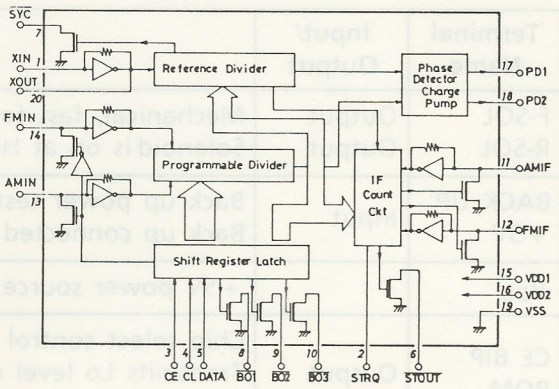

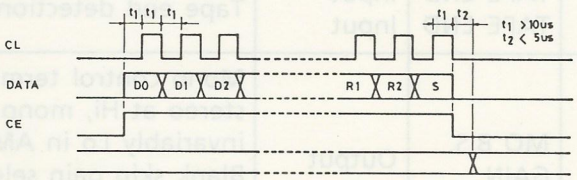

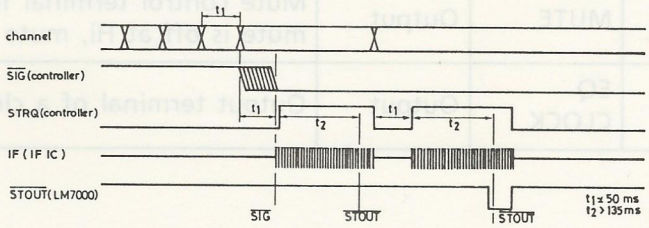

AN6291

dbx NR IC

Block Diagram

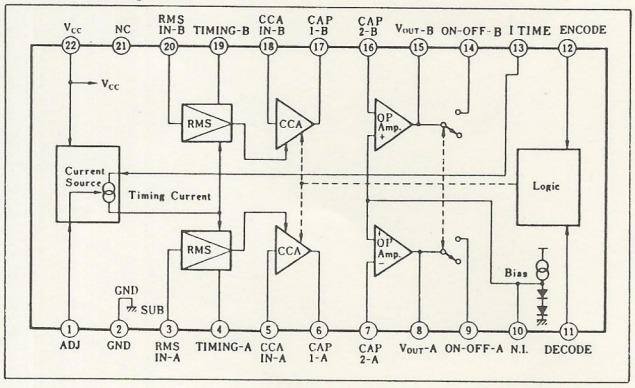

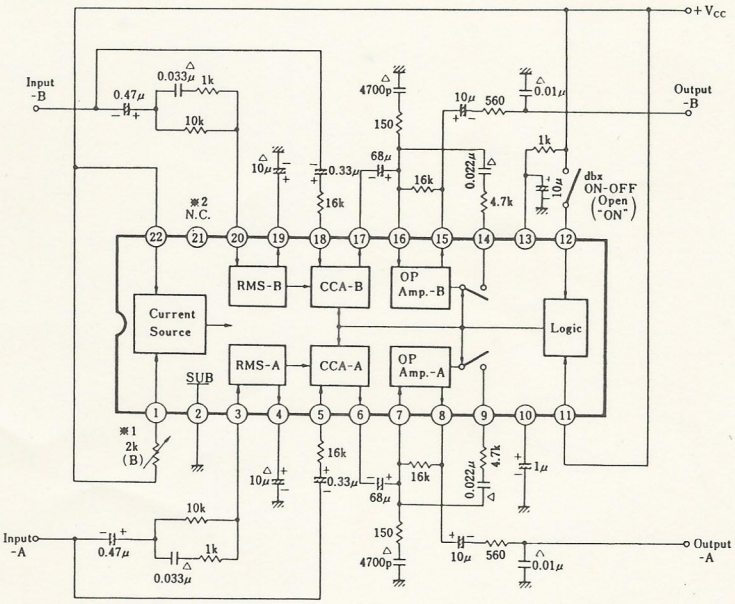

Resistance : Ω
Capacitance : F

LC7537N

ELECTRONIC VOLUME (VOL, BAL, FAD)

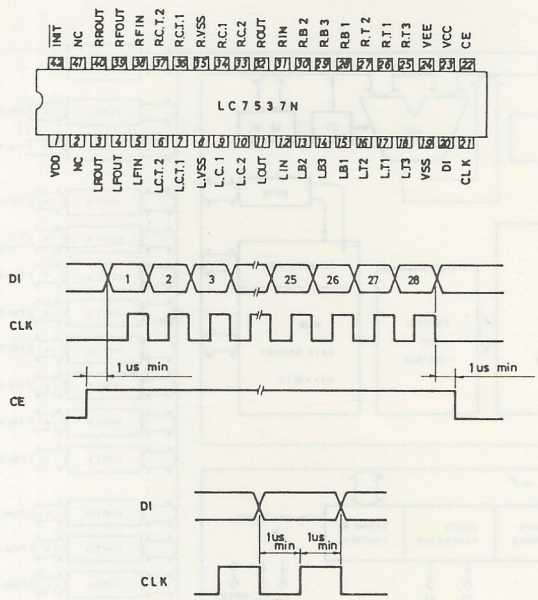

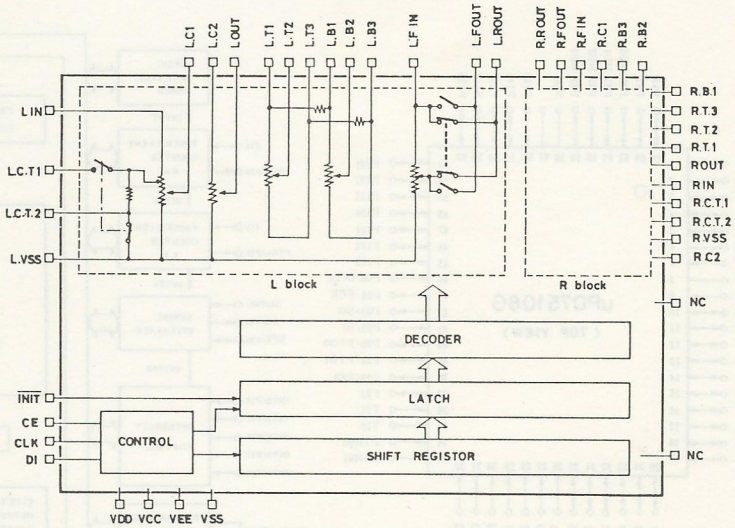

LA1140

FM IF AMP / DETECTOR

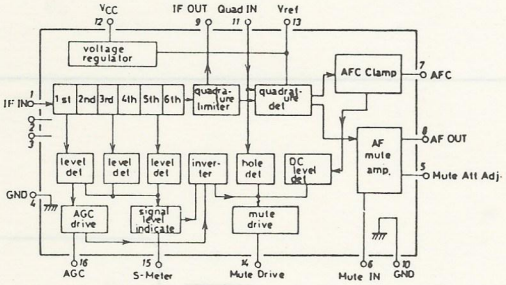

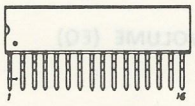

LA1135

AM TUNER IC

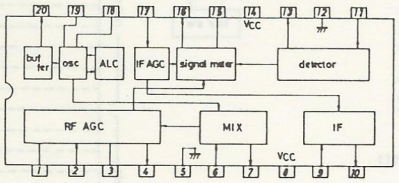

LA6462S

OPERATIONAL AMP

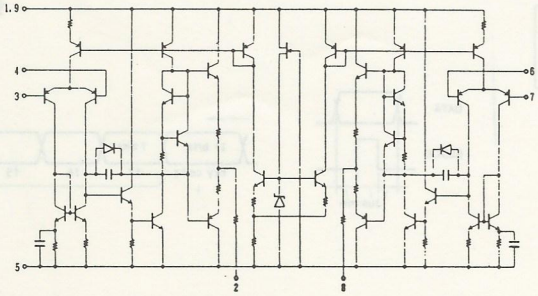

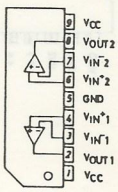

μPD75108G

1 CHIP MICRO COMPUTER

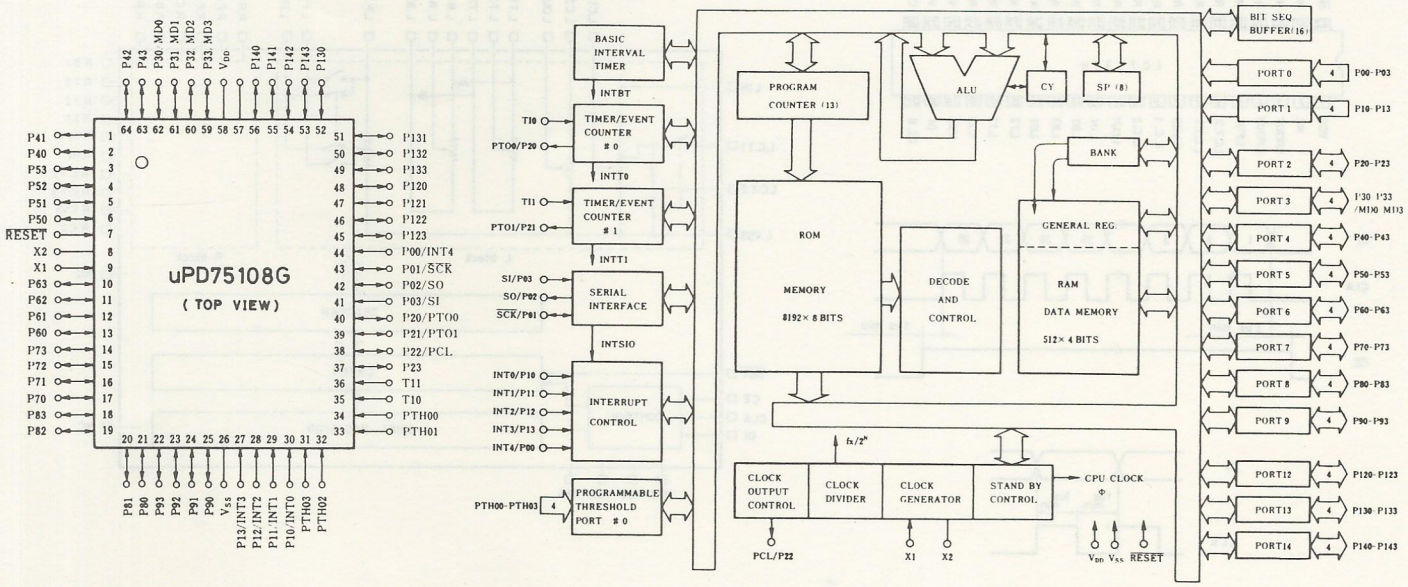

LC7523

ELECTRONIC VOLUME (EQ)

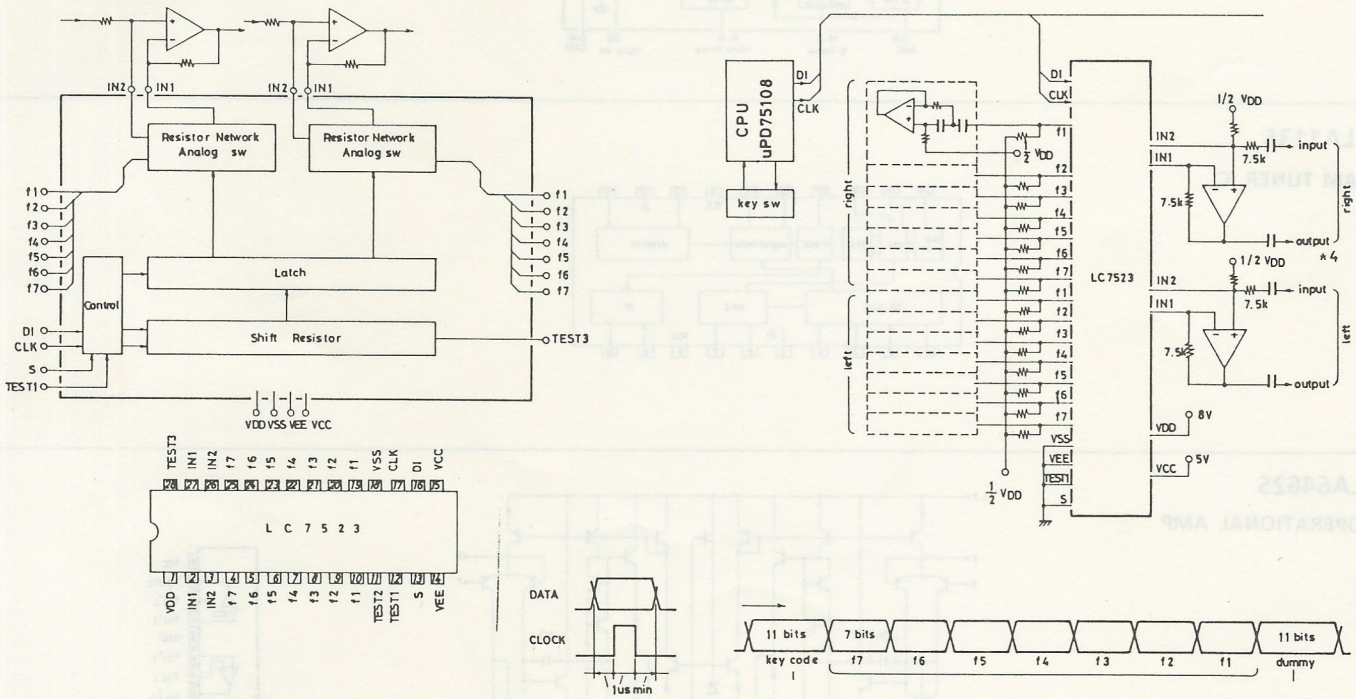

(Top View)

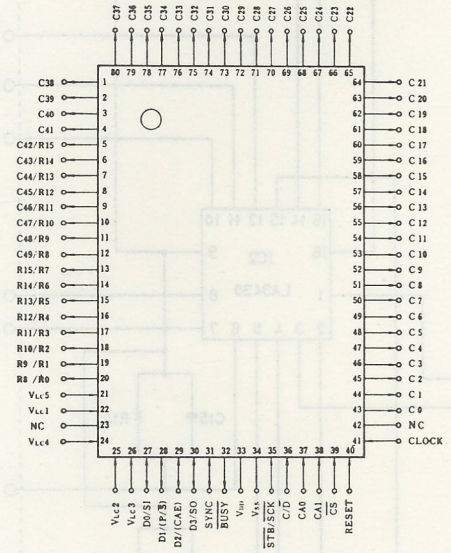

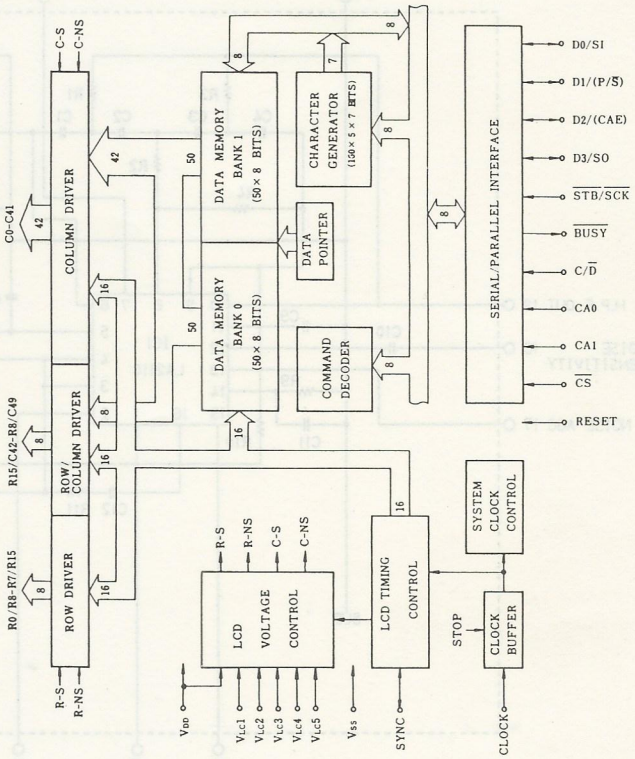

DISPLAY "A"

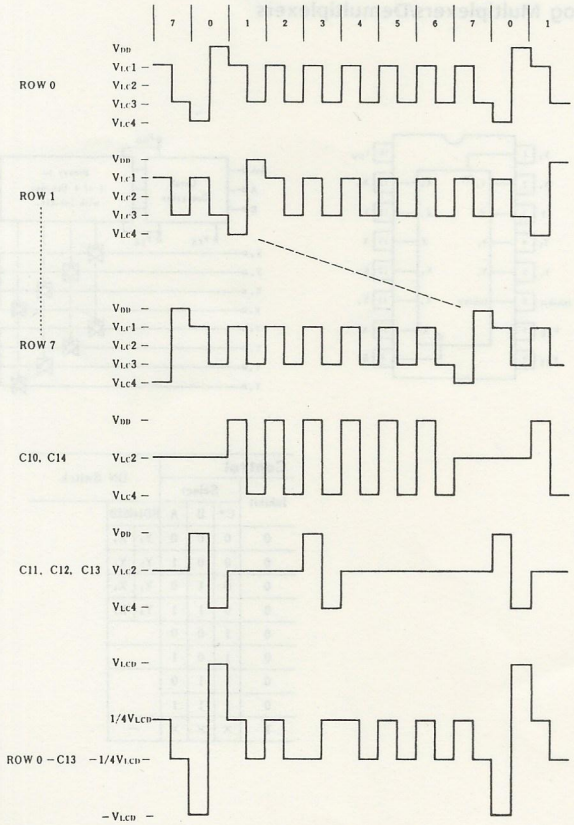

DATA WRITE TIMING

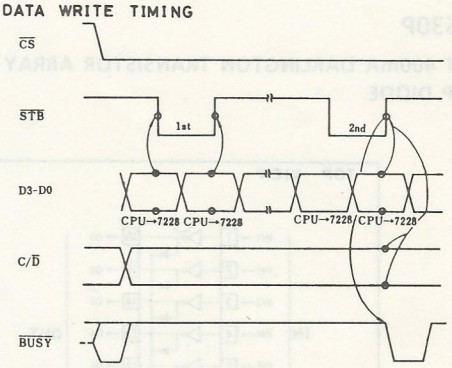

DATA READ TIMING

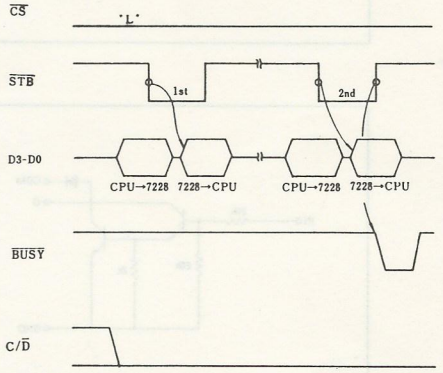

STK3400A (Equivalent Circuit)

N.B./MPX IC

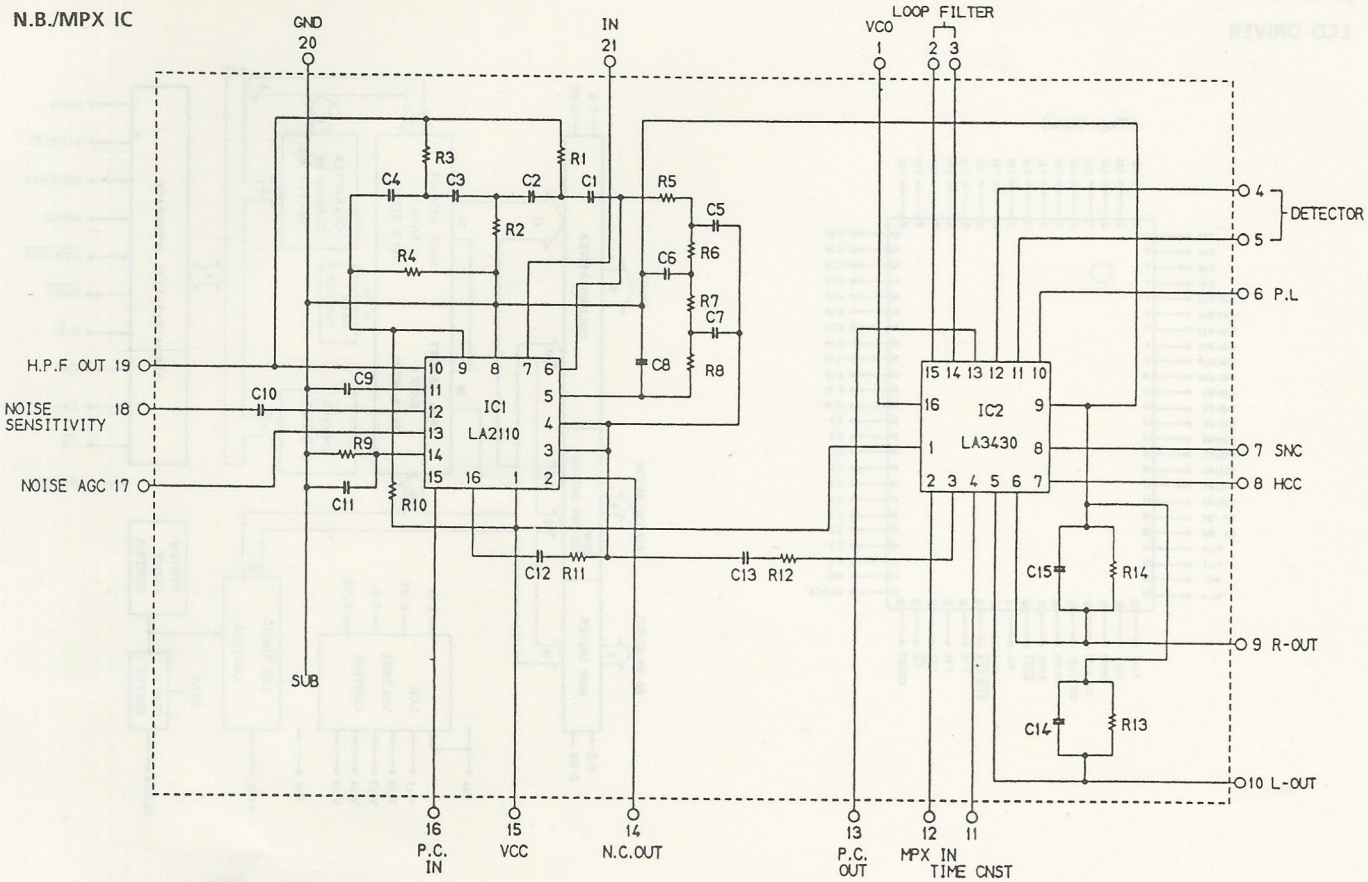

M54530P

7-UNIT 400mA DARLINGTON TRANSISTOR ARRAY WITH CLAMP DIODE

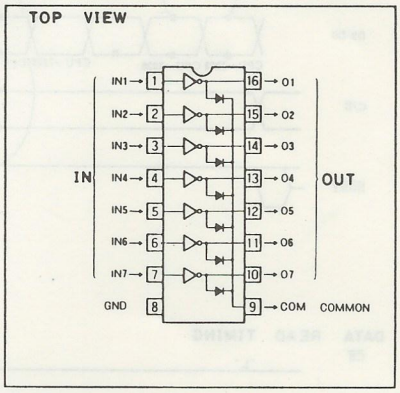

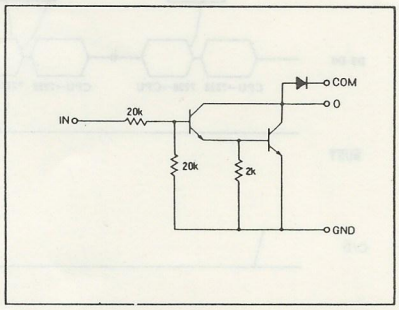

HD14052B

Analog Multiplexers/Demultiplexers

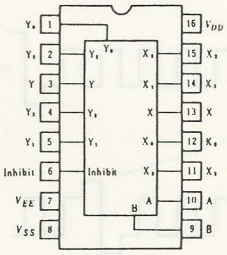

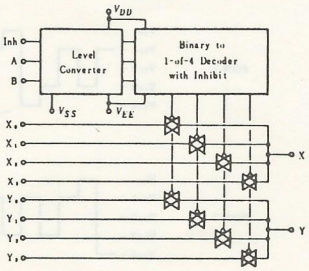

Control				ON Switch	
Inhibit	Select				
	C*	B	A	HD14052B	
0	0	0	0	Y_0	X_0
0	0	0	1	Y_1	X_1
0	0	1	0	Y_2	X_2
0	0	1	1	Y_3	X_3
0	1	0	0		
0	1	0	1		
0	1	1	0		
0	1	1	1		
1	×	×	×	—	

AN6540

4-Terminal Voltage Regulator with Adjustable Rise Time

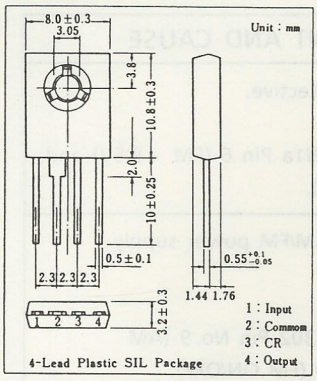

■ **Features**

- Low dropout voltage : 0.3V (typ.)
- Control of output voltage rise time
- Internal short-circuit protection
- Low temperature coefficient of output voltage

Block Diagram

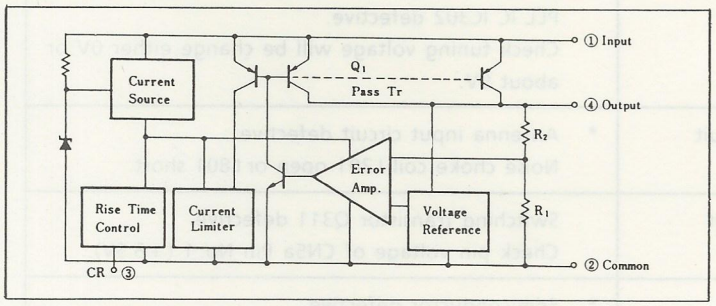

AN7171K

Dual 12 W Audio Power Amplifier Circuit

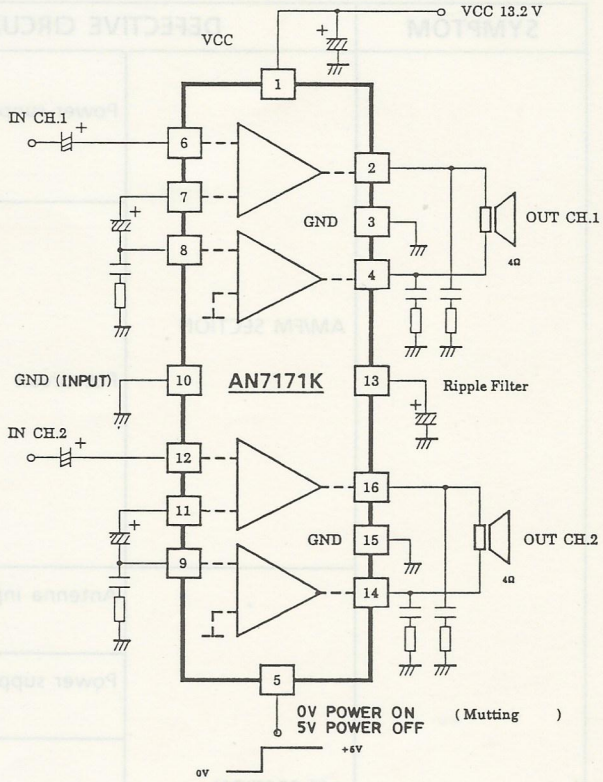

M51143L

APS MUSIC SENSOR

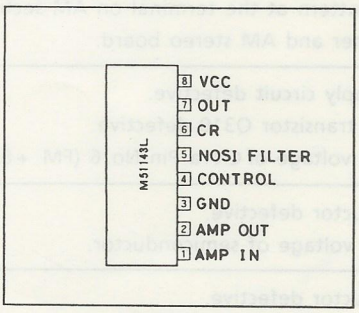

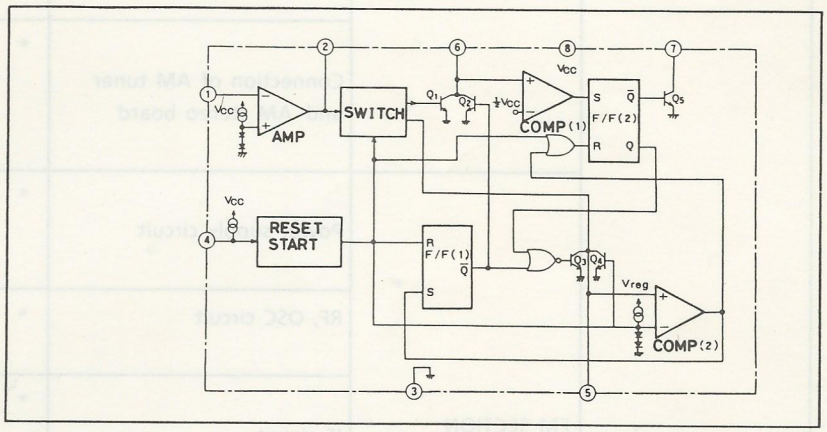

M51522L

PRE AMPLIFIRE

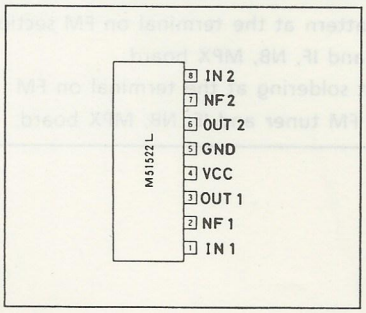

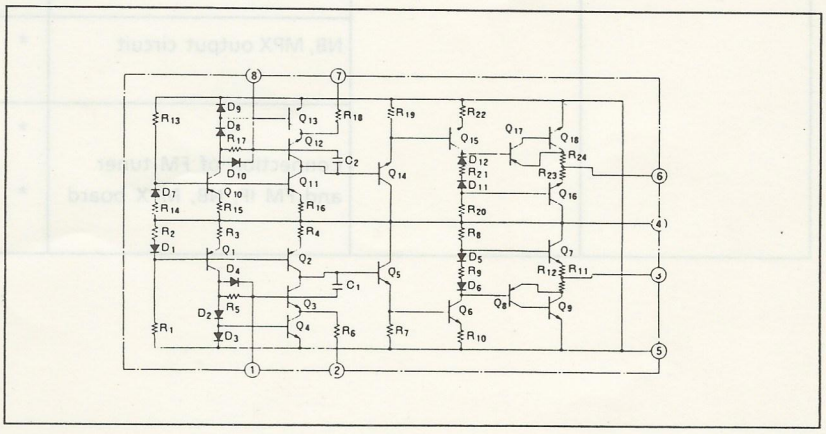

TROUBLESHOOTING

RADIO SECTION

SYMPTOM	DEFECTIVE CIRCUIT		DEFECTIVE POINT AND CAUSE
NO SOUND	AM/FM SECTION	Power supply circuit	* Power supply circuit defective. Q310, Q311 defective. Check pin voltage of CN1a Pin 6 (FM +8.5V) and CN5a Pin 1 (AM +8.5V).
		PLL circuit	* PLL circuit defective. (AM/FM power supply ON/OFF). IC302 defective. Check pin voltage of IC302 Pin No. 9 (AM ON/OFF) and Pin No. 10 (FM ON/OFF).
			* PLL circuit defective. (Vt does not change). Low pass filter circuit Q305, Q306 defective. PLL IC IC302 defective. Check tuning voltage will be change either 0V or about 9V.
	AM SECTION	Antenna input circuit	* Antenna input circuit defective. Noise choke coil L301 open or L801 short.
		Power supply circuit	Switching transistor Q311 defective. Check pin voltage of CN5a Pin No. 1 (+8.5V).
		RF, OSC, IF circuit	* Semiconductor defective. Check for voltage of semiconductor. * RF801, RF802, T801, T802, L803 open.
		Connection of AM tuner and AM stereo board	* Insufficient soldering at the terminal on AM section board. Cracked pattern at the terminal on AM section of AM tuner and AM stereo board.
	FM SECTION	Power supply circuit	* Power supply circuit defective. Switching transistor Q310 defective. Check pin voltage of CN1a Pin No. 6 (FM +8.5V).
		RF, OSC circuit	* Semiconductor defective. Check for voltage of semiconductor.
		IF circuit	* Semiconductor defective. Check pin voltage of Q602, IC601. * CF601, CF602, L602 and T601 defective.
		NB, MPX output circuit	* NB, MPX circuit defective. Check pin voltage of IC602.
		Connection of FM tuner and FM IF, NB, MPX board	* Cracked pattern at the terminal on FM section of FM tuner and IF, NB, MPX board. * Insufficient soldering at the terminal on FM section of FM tuner and IF, NB, MPX board.

TROUBLESHOOTING

SYMPTOM	DEFECTIVE CIRCUIT		DEFECTIVE POINT AND CAUSE
INSUFFICIENT SOUND	AM/FM SECTION	Antenna input circuit	* Poor antenna contact. * Antenna input circuit defective.
	AM SECTION	RF, IF circuit	* Deviation in tracking alignment (RF801, RF802). * Deviation in IF transformer T801, T802. * RF amplifier Q802, Q803 defective. * Diode D801, D802 defective.
		AM stereo circuit	* IF buffer amplifier Q302 defective. * AM stereo circuit defective. Check pin voltage of IC851.
	FM SECTION	RF, IF circuit	* Deviation in tracking alignment (L501, L503). * RF amplifier Q501 defective. * Diode D501, D502 defective. * IF transformer T501 defective. * IF amplifier Q602 and IC601 defective. Check pin voltage of Q602 and IC601. * FM detector transformer T601 defective.
		NB circuit MPX circuit	* NB, MPX circuit defective. Check pin voltage of IC602.
POOR NB			* NB IC defective. Check pin voltage of IC602.
POOR STEREO EFFECT	FM SECTION	MPX circuit	* VR602 misalignment. * VR604 misalignment. * Ceramic resonator CR601 defective. * Transistor Q301 defective. * NB, MPX IC defective. Check pin voltage of IC602.
	AM SECTION	AM stereo circuit	* VR851, VR852 misalignment. * C855~C859 capacity insufficient or open. * Ceramic resonator CR851 defective. * AM stereo IC IC851 defective.
STEREO INDICATOR DOES NOT LIGHT	AM/FM SECTION	Indicator display circuit	* IC301 ST signal input terminal (Pin No. 28) defective.
	AM SECTION	AM stereo circuit	* AM stereo circuit defective. Check pin voltage of IC851.
	FM SECTION	FM MPX circuit	* Transistor Q301 defective. * NB, MPX IC IC602 defective.

TROUBLESHOOTING

TAPE SECTION

SYMPTOM	DEFECTIVE CIRCUIT	DEFECTIVE POINT AND CAUSE
NO SOUND	Power supply circuit	* Q309 (Tape power supply ON/OFF) defective. Check pin voltage of IC301 Pin No. 54 and IC304 Pin No.3, 14.
	Mechanism or motor	* Motor does not run. Motor defective. Motor drive transistor Q51 defective. FG servo IC IC51 defective. Resistor R61 open. Semiconductor defective. Check pin voltage of IC301 Pin No. 52, IC304 Pin No. 5, 12 and Q52.
		* Solenoid does not operation. Solenoid open or semiconductor defective. Check pin voltage of IC301 Pin No. 50, 55, 56 and IC304 Pin No.7-10, 2-15, 1-16.
	Pre amplifier circuit	* Pre amplifier defective. Check pin voltage of IC651. * Leakage of large amount of DC current into capacitor C653, C673. * Head lead wire open.
DISTORTED SOUND OR INSUFFICIENT SOUND	Pre amplifier circuit	* Pre amplifier circuit defective. Check pin voltage of IC651.
	Head	* Head surface dirty. * Head azimuth angle misalignment.
OSCILLATION	Pre amplifier circuit	* C651 or C671 capacity insufficient or open.
ABNORMAL TAPE SPEED	Mechanism or motor	* Mechanism defective. * Motor defective.
	FG servo circuit	* FG coil open. * FG servo circuit defective. Check pin voltage of IC51.
DOES NOT REVERSE (EITHER AUTO OR MANUAL)	ATR circuit	* Does not reverse when program selector was depressed or end of tape comes. IC304 defective. Check pin voltage of IC304 Pin No. 7, 10. Solenoid SOL1 open. IC301 defective. Check pin voltage of IC301 Pin No. 50.

TROUBLESHOOTING

SYMPTOM	DEFECTIVE CIRCUIT		DEFECTIVE POINT AND CAUSE
ALWAYS REVERSE		ATR circuit	* Always reverse when the tape running. Tape end sensor defective. Check pin voltage of PT51, PT52. Tape end sensor amplifier defective. Check pin voltage of Q319, Q320.
DOES NOT OPERATE APS		APS circuit	* APS IC defective. Check pin voltage of IC652. Check pin voltage of IC301 Pin No. 36. (Blank input terminal)
POOR DOLBY NR EFFECT		Dolby circuit	* Dolby ON/OFF circuit defective. Check pin voltage of Q156, Q157. * Dolby NR circuit defective. Check pin voltage of IC401.
POOR dbx NR EFFECT		dbx circuit	* dbx ON/OFF circuit defective. Check pin voltage of Q158. * dbx NR circuit defective. Check pin voltage of IC402.

RADIO AND TAPE SECTION

SYMPTOM	DEFECTIVE CIRCUIT		DEFECTIVE POINT AND CAUSE
NO SOUND		Power supply circuit	* Fuse open. * D316 short or open. * Power relay RL301 defective. * Relay driver IC304 defective. Check pin voltage of IC304 Pin No. 4, 13 * Regulator IC307 defective.
	Audio signal circuit	NR circuit	* NR circuit defective. Check pin voltage of IC401, IC402, IC404
		Electronic volume circuit	* Electronic volume circuit defective. Check pin voltage of IC102, IC103. Check pin wave of IC102 Pin No. 20, 21, 22 Pin No. 20 - SERIAL DATA Pin No. 21 - SERIAL CLOCK Pin No. 22 - CHIP ENABLE
		Mute circuit	* Mute drive transistor Q317 defective. Check pin voltage of IC105 Pin No. 5. Lo level - Mute off. Hi level - Mute on.
		Power amplifier circuit	* Power amplifier circuit defective. Check pin voltage of IC105, IC106.
OSCILLATION		Power supply circuit	* C331, C332 capacity insufficient or open. * Voltage regulator IC307 defective.
ENGINE NOISE IS EXTREME		Power supply circuit	* C163, C322, C323 capacity insufficient or open. * Voltage regulator IC307 defective.

TROUBLESHOOTING

CONTROL SECTION

SYMPTOM	DEFECTIVE CIRCUIT		DEFECTIVE POINT AND CAUSE
POWER SW DOES NOT ACCEPT		Control circuit	* Check wiring Main board to display board. * Power on reset IC IC306 defective. * Key matrix circuit defective. Check pin wave of key source and key return. * Ceramic resonator X302 defective. * Voltage regulator IC303 defective. * IC301 defective.
ANTI THEFT DOES NOT CANCEL (DISPLAY IS NORMALCY)		Control circuit	* Power supply switching transistor Q318 defective. * Security code ROM IC305 defective.
LCD DOES NOT DISPLAY		Power supply circuit	* Voltage regulator IC104 defective. * Charge pump transistor Q316 defective.
		Control circuit	* Check wiring Main board to display board. * Transistor Q1, Q2 defective. * Trimmer resistor VR1 defective. * LCD display IC1, IC2 defective. * Control IC IC301 defective.
LCD DOES NOT DISPLAY (FAIL)		LCD drive circuit	* LCD driver IC1, IC2 defective. * Character data ROM IC305 defective.
DIMMER DOES NOT FUNCTION		Dimmer circuit	* Q312, Q313 defective. Check pin voltage of Q312, Q313. * CdS1 defective. * Zener diode D311, D312 defective.
THE UNIT SEARCH SCANNS BUT DOES NOT STOP	AM/FM SECTION	Stop circuit	* Search stop IF count circuit defective. TC301 misalignment. * IF count request circuit defective. Check pin voltage of Q307, IC302 Pin No. 2 and IC301 Pin No. 22. IF count IC IC302 defective.
	AM SECTION	Stop circuit	* VR303 misalignment. * Ceramic filter CF803 defective. * AM IC IC801 defective. Check pin voltage of AM tuner Pin No. A5 and IC301 Pin No. 32. (Signal level terminal) * IF count buffer Q308 defective.
	FM SECTION	Stop circuit	* VR301 misalignment. * T601 misalignment. * Q604 defective. Check pin voltage of IC601 Pin No. 15, 16 and IC301 Pin No. 32. (Signal level terminal) * IF count buffer Q603, defective.

MAIN CIRCUIT BOARD COMPONENT LOCATION GUIDE

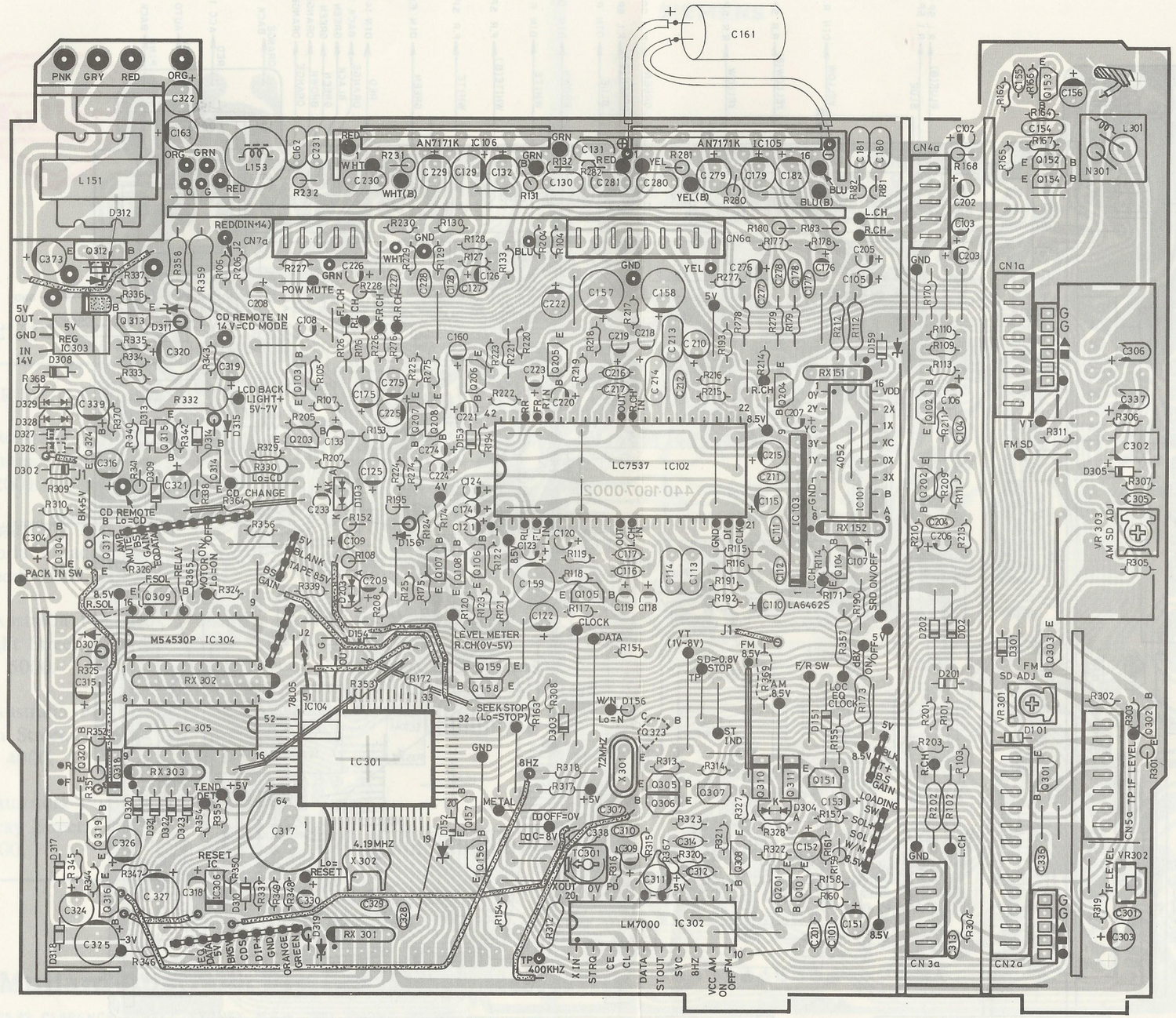

TOP VIEW

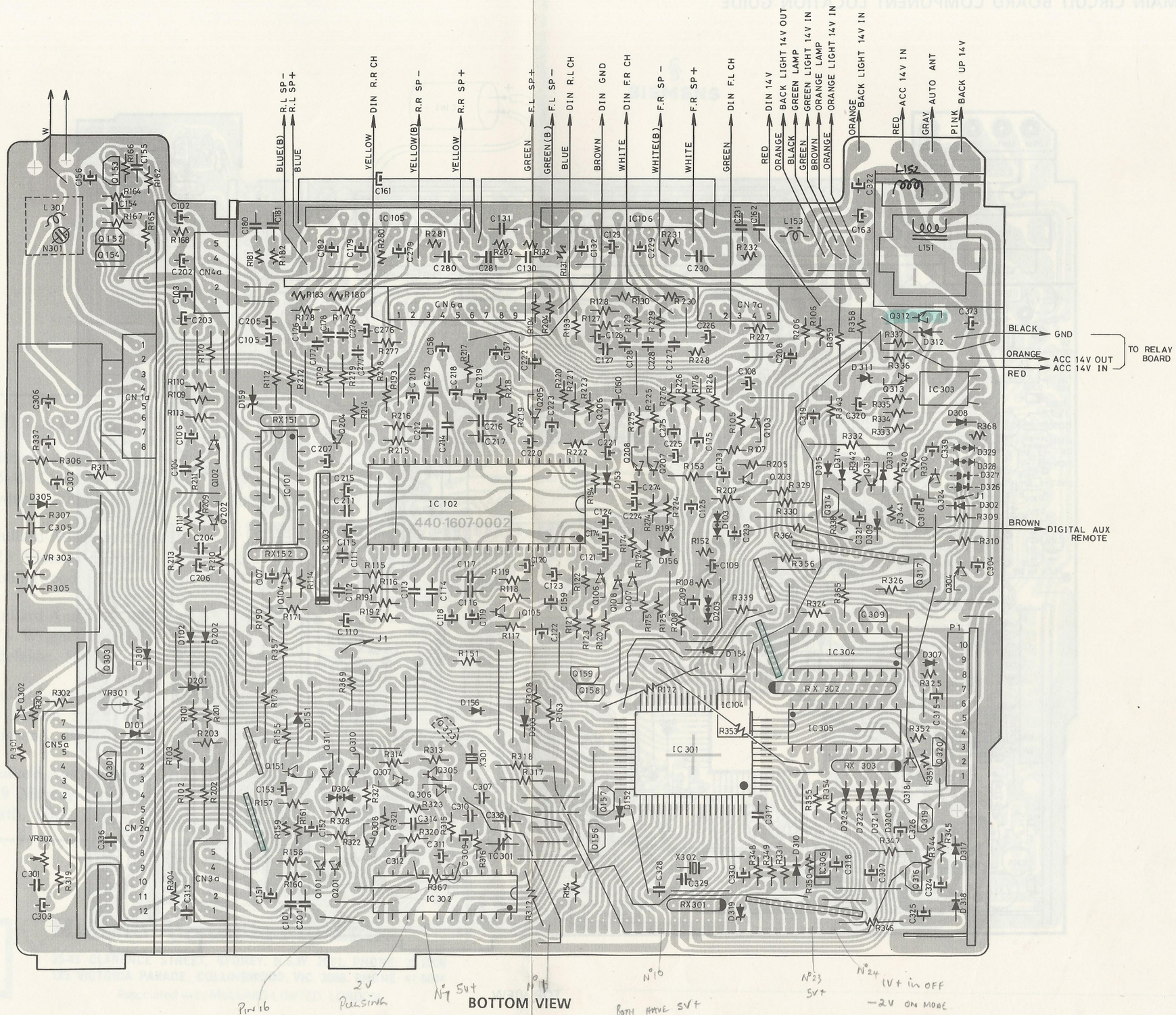
W
R.L SP −
R.L SP +
BLUE(B)
BLUE
YELLOW
DIN R.R CH
YELLOW(B)
R.R SP −
YELLOW
R.R SP +
GREEN
F.L SP +
GREEN (B)
F.L SP −
BLUE
DIN R.L CH
BROWN
DIN GND
WHITE
DIN F.R CH
WHITE(B)
F.R SP −
WHITE
F.R SP +
GREEN
DIN F.L CH
RED
DIN 14 V
ORANGE
BACK LIGHT 14V OUT
BLACK
GREEN LAMP
GREEN
GREEN LIGHT 14V IN
BROWN
ORANGE LAMP
ORANGE
ORANGE LIGHT 14V IN
ORANGE
BACK LIGHT 14V IN
RED
ACC 14V IN
GRAY
AUTO ANT
PINK
BACK UP 14V
BLACK
GND
ORANGE
ACC 14V OUT
RED
ACC 14V IN
TO RELAY BOARD
BROWN
DIGITAL AUX REMOTE
IC 102
440-1607-0002
IC 301
IC 302
IC 303
IC 304
IC 305
IC 104
IC 105
IC 106
IC 107
IC 103
RX 302
RX 303
RX 301
RX 151
RX 152
L 301
N301
L151
L152
L153
VR 303
VR301
VR302
X302
TC 301
P1
CN 1a
CN 2a
CN 3a
CN4a
CN 5a
CN 6a
CN 7a
Pin 16
5V+ in
on/OFF MODE
2V
PULSING
3V PLUSING
WHEN ON
N°7 5V+
N°8
N°10
BOTH HAVE 5V+
IN OFF MODE.
N°23
5V+
N°24
1V+ in OFF
−2V ON MODE

BOTTOM VIEW

REF. NO. 110 CTP-1388-1 MAIN CIRCUIT BOARD ASSEMBLY PARTS LIST

REF. NO.	DESCRIPTION			PART NO.	MFR'S NO.
–	Main printed circuit board				440-1607-0002
C101, 201	Monolithic capacitor	0.01μF	25V		262-103K-1EJR-006
C102, 103, 105, 106, 107, 108, 109, 118, 119, 121, 123, 124, 126, 133, 153, 174, 176, 202, 203, 205, 206, 207, 208, 209, 218, 219, 221, 223, 224, 226, 233, 274, 276, 309, 337	Tantalum electrolytic capacitor	1μF	16V		255-1R0M-1C00-020
C104, 204	Monolithic capacitor	0.015μF	25V		262-153K-1EJR-005
C110, 125, 151, 175, 210, 225, 275, 303, 304, 319, 321	Electrolytic capacitor	10μF	16V		250-100M-1C00-010
C111, 211, 328, 329	Ceramic capacitor	33pF	50V		260-330K-1H00-005
C112, 212	Monolithic capacitor	0.0033μF	25V		262-332K-1EJR-005
C113, 114, 213, 214	Polyester film capacitor	0.068μF	50V		275-683J-1H00-001
C115, 215	Electrolytic capacitor	2.2μF	50V		250-2R2M-1H00-010
C116, 216	Monolithic capacitor	0.0033μF	25V		262-332K-1EJR-006
C117, 217	Monolithic capacitor	0.001μF	25V		262-102K-1EJR-006
C120, 160, 220	Tantalum electrolytic capacitor	0.22μF	16V		255-R22M-1C00-020
C122, 152, 222, 311, 316	Electrolytic capacitor	22μF	6.3V		250-220M-0J00-010
C127, 177, 227, 277, 313	Monolithic capacitor	0.0068μF	25V		262-682M-1EJR-005
C128, 178, 228, 278, 310	Monolithic capacitor	0.01μF	25V		262-103K-1EJR-005
C129, 132, 179, 182, 229, 279	Electrolytic capacitor	100μF	10V		250-101M-1A00-025
C130, 131, 154, 162, 180, 181, 230, 231, 280, 281	Polyester film capacitor	0.1μF	63V		275-104J-1J00-010
C155	Monolithic capacitor	0.022μF	25V		262-223K-1EJR-011
C156	Electrolytic capacitor	4.7μF	25V		250-4R7M-1E00-010
C157, 320	Electrolytic capacitor	47μF	10V		250-470M-1A00-032
C158, 159, 327	Electrolytic capacitor	100μF	6.3V		250-101M-0J00-032
C161	Electrolytic capacitor	470μF	16V		250-471M-1C00-047
C163, 322, 373	Electrolytic capacitor	47μF	16V		250-470M-1C00-025
C301, 336	Monolithic capacitor	0.022μF	25V		262-223M-1EJR-010
C302	Electrolytic capacitor	10μF	16V		250-100M-1C00-012
C305, 338	Monolithic capacitor	0.022μF	25V		262-223M-1EJR-011
C306, 318	Tantalum electrolytic capacitor	4.7μF	10V		255-4R7M-1A00-021
C307	Ceramic capacitor	39pF	50V		260-390K-1HCH-011
C312, 314	Ceramic capacitor	100pF	50V		260-101K-1H00-011
C315	Tantalum electrolytic capacitor	2.2μF	10V		255-2R2M-1C00-021
C317	Super capacitor	0.047μF	5.5V		257-473Z-0H00-071
C324, 326	Electrolytic capacitor	47μF	6.3V		250-470M-0J00-019
C325	Electrolytic capacitor	220μF	6.3V		250-221M-0J00-033
C330	Tantalum electrolytic capacitor	0.1μF	16V		255-R10M-1C00-020

REF. NO.	DESCRIPTION	PART NO.	MFR'S NO.
C339	Electrolytic capacitor 100μF 4V		250-101M-0G00-019
CN1a	8P plug	ESC-0347	412-0347-0000
CN2a	12P plug	ESC-0349	412-0349-0000
CN3a, 4a, 7a	5P plug	ESC-0346	412-0346-0000
CN5a	7P plug	ESC-0209	412-0209-0000
CN6a	9P plug	ESC-0348	412-0348-0000
D101, 102, 151, 153, 154, 156, 201, 202, 301, 302, 303, 305, 307, 308, 309, 310, 313, 314, 315, 317 318, 320, 321, 322, 323, 326, 327	Diode 1SS133 or equivalent	ETD-1SS133	304-0033-0000
D103, 203	Diode MC931	ETD-MC931	304-0063-0000
D152	Zener diode HZ6(A3) or equivalent	ETD-HZ6	306-0031-1200
D155, 311, 319	Zener diode RD4.3E(B2)	ETD-RD4.3E	306-0048-1100
D304	Diode MC921	ETD-MC921	304-0051-0000
D312	Zener diode EQA02-09(SA) or equivalent	ETD-EQA02-09	306-0018-1000
D328, 329	Diode MC911 or equivalent	ETD-MC911	304-0062-0000
IC101	Analogue switch IC HD14052BP or equivalent	ETI-HD14052BP	310-0225-0000
IC102	Electronic volume IC LC7537	ETI-LC7537	310-0289-0000
IC103	Operational amplifier IC LA6462S	ETI-LA6462S	310-0309-0000
IC104, 303	Voltage regulator IC μPD78L05	ETI-μPC78L05	310-0058-0000
IC105, 106	Power amplifier IC AN7171K	ETI-AN7171K	310-0305-0000
IC301	1 chip micro computer μPD75108	ETI-μPD75108	310-0306-0000
IC302	PLL IC LM7000	ETI-LM7000	310-0307-0000
IC304	Driver array IC M54530P	ETI-M54530P	310-0313-0000
IC305	B.I.P ROM TBP24SA10	ETI-TBP24SA10	310-0308-0000
IC306	Power ON reset IC MN1280M	ETI-MN1280M	310-0263-1100
L151	Choke coil	ELS-0094	350-0094-1400
L153	Inductor 2.2mH	ELD-0301	351-0301-1700
L301	Inductor 15μH	ELA-0035	352-0035-1100
N301	Surge protector	EIN-0005	431-0005-0000
Q101, 102, 103, 104, 105, 106, 107, 108, 151, 201, 202, 203, 204, 205, 206, 207, 208, 302, 305, 306, 308, 324	Transistor 2SC2458L(BL) or equivalent	ETTC-2SC2458L	302-0078-1400
Q152, 153, 154, 157, 158, 159, 301, 314	Digital transistor DTC144ES	ETTC-DTC144ES	302-0115-0000
Q156	Digital transistor DTA144ES	ETTA-DTA144ES	301-0053-0000
Q303, 309, 316, 317	Digital transistor DTA124ES	ETTA-DTA124ES	301-0046-0000
Q304, 315	Transistor 2SA1115(E) or equivalent	ETTA-2SA1115	301-0033-1100
Q307, 313	Transistor 2SC2603(F) or equivalent	ETTC-2SC2603	302-0091-1200
Q310, 311, 318	Transistor 2SB822(Q) or equivalent	ETTB-2SB822	301-0020-1100
Q312	Transistor 2SC1846(R)	ETTC-2SC1846	302-0121-1100
Q319, 320	Digital transistor UN4210	ETTC-UN4210	302-0127-0000
Q323	Digital transistor DTC124ES	ETTC-DTC124ES	302-0125-0000
R101, 201, 333, 365, 371	Carbon film resistor 15k ohm 1/6W ±5%		200-153J-2C00-010

REF. NO.	DESCRIPTION				PART NO.	MFR'S NO.
R102, 202	Carbon film resistor	4.7k ohm	1/4W	±5%		200-472J-2E00-010
R103, 113, 170, 203, 213, 319	Carbon film resistor	22k ohm	1/6W	±5%		200-223J-2C00-010
R104, 116, 162, 166, 204, 216, 318	Carbon film resistor	10k ohm	1/6W	±5%		200-103J-2C00-010
R105, 119, 122, 205, 219, 222, 303, 309, 321, 370	Carbon film resistor	1M ohm	1/6W	±5%		200-105J-2C00-010
R106, 114, 117, 120, 125, 175, 206, 214, 217, 220, 225, 275, 302, 306, 310, 311	Carbon film resistor	3.3k ohm	1/6W	±5%		200-332J-2C00-010
R107, 129, 154, 179, 207, 229, 279, 313, 322, 331, 348	Carbon film resistor	220 ohm	1/6W	±5%		200-221J-2C00-010
R108	Carbon film resistor	47k ohm	1/6W	±5%		200-473J-2C00-000
R109, 209	Carbon film resistor	680k ohm	1/6W	±5%		200-684J-2C00-010
R110, 115, 128, 178, 210, 215, 278	Carbon film resistor	1.5k ohm	1/6W	±5%		200-152J-2C00-010
R111, 211	Carbon film resistor	3.9k ohm	1/6W	±5%		200-392J-2C00-010
R112, 212, 312	Carbon film resistor	10k ohm	1/4W	±5%		200-103J-2E00-010
R118, 124, 174, 194, 218, 224, 274	Carbon film resistor	330k ohm	1/6W	±5%		200-334J-2C00-010
R121, 126, 153, 157, 161, 176, 221, 226, 276, 314, 316, 320, 323, 334	Carbon film resistor	4.7k ohm	1/6W	±5%		200-472J-2C00-010
R123, 130, 223, 230	Carbon film resistor	680 ohm	1/6W	±5%		200-681J-2C00-010
R127, 163, 177, 191, 192, 193, 227, 277, 324, 340	Carbon film resistor	2.2k ohm	1/6W	±5%		200-222J-2C00-010
R131, 132, 181, 182, 231, 232, 281, 282	Carbon film resistor	2.2 ohm	1/4W	±5%		200-2R2J-2E00-000
R133, 158, 160, 172, 190, 308, 317, 326, 329, 339, 342, 343, 364	Carbon film resistor	100k ohm	1/6W	±5%		200-104J-2C00-010
R151, 367	Carbon film resistor	3.3M ohm	1/6W	±5%		200-335J-2C00-010
R152	Carbon film resistor	470 ohm	1/6W	±5%		200-471J-2C00-000
R155, 330, 354, 355	Carbon film resistor	220k ohm	1/6W	±5%		200-224J-2C00-010
R156, 168	Carbon film resistor	10k ohm	1/6W	±5%		200-103J-2C00-000
R159, 180, 280	Carbon film resistor	680 ohm	1/6W	±5%		200-681J-2C00-000
R164, 165, 305, 327, 328, 337, 353	Carbon film resistor	1k ohm	1/6W	±5%		200-102J-2C00-010
R167, 208, 304, 335, 356	Carbon film resistor	47k ohm	1/6W	±5%		200-473J-2C00-010
R171	Carbon film resistor	270 ohm	1/6W	±5%		200-271J-2C00-010
R173	Carbon film resistor	100k ohm	1/4W	±5%		200-104J-2E00-010
R183, 341, 350	Carbon film resistor	100k ohm	1/6W	±5%		200-104J-2C00-000

REF. NO.	DESCRIPTION				PART NO.	MFR'S NO.
R195	Carbon film resistor	3.3k ohm	1/6W	±5%		200-332J-2C00-000
R228	Carbon film resistor	1.5k ohm	1/6W	±5%		200-152J-2C00-000
R301	Carbon film resistor	4.7k ohm	1/6W	±5%		200-472J-2C00-000
R307	Carbon film resistor	33k ohm	1/6W	±5%		200-333J-2C00-010
R315	Carbon film resistor	1.8k ohm	1/6W	±5%		200-182J-2C00-010
R325	Carbon film resistor	22k ohm	1/6W	±5%		200-223J-2C00-000
R332	Metal film resistor	10 ohm	1W	±5%		202-100J-3A00-010
R336	Carbon film resistor	2.2 ohm	1/6W	±5%		200-2R2J-2C00-010
R338	Carbon film resistor	220k ohm	1/6W	±5%		200-224J-2C00-000
R344	Carbon film resistor	470 ohm	1/6W	±5%		200-471J-2C00-010
R345, 347	Carbon film resistor	33 ohm	1/6W	±5%		200-330J-2C00-010
R346	Carbon film resistor	560 ohm	1/6W	±5%		200-561J-2C00-010
R349	Carbon film resistor	10 ohm	1/6W	±5%		200-100J-2C00-010
R351, 352	Carbon film resistor	1k ohm	1/6W	±5%		200-102J-2C00-000
R357	Carbon film resistor	2.2k ohm	1/4W	±5%		200-222J-2E00-010
R358	Carbon film resistor	100 ohm	1/2W	±5%		200-101J-2H00-010
R359	Metal film resistor	56 ohm	1W	±5%		202-560J-3A00-010
R368	Carbon film resistor	1M ohm	1/6W	±5%		200-105J-2C00-000
R369	Carbon film resistor	3.3k ohm	1/4W	±5%		200-332J-2E00-010
RX151, 152, 301	Resistor array	68k ohm×4			ECX-0053	370-0053-0100
RX302	Resistor array	68k ohm×8			ECX-0087	370-0087-0100
RX303	Resistor array	4.7k ohm×4			ECX-0088	370-0088-0100
TC301	Ceramic trimmer capacitor	30pF			ECCV-0101	345-0101-0100
VR301, 303	Trimmer resistor	50k ohm-B			ECRV-1007	340-1007-0200
VR302	Trimmer resistor	10k ohm-B			ECRV-1013	340-1013-0200
X301	Crystal	7.2MHz			EOC-0032	361-0032-1900
X302	Ceramic resonator	4.19MHz			EOC-0033	361-0033-0400
	Flat cable (10 lead wire)				WX-0238	471-0238-0000
	Flat cable (5 lead wire)				WX-0240	471-0240-0000
	Flat cable (4 lead wire)				WX-0241	471-0241-0000
	5P board-in wire set				AH-0218	421-0218-0000
	Cord clamp				PP-0544	100-6544-0000
	Shield case				PL-7140	100-7140-0000

AM RF CIRCUIT BOARD COMPONENT LOCATION GUIDE

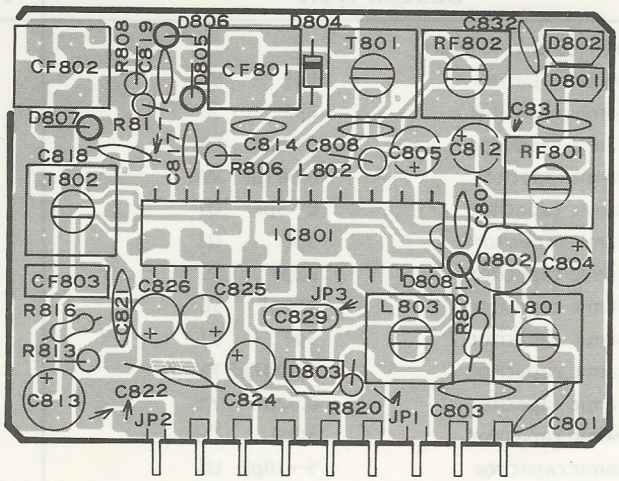

TOP VIEW

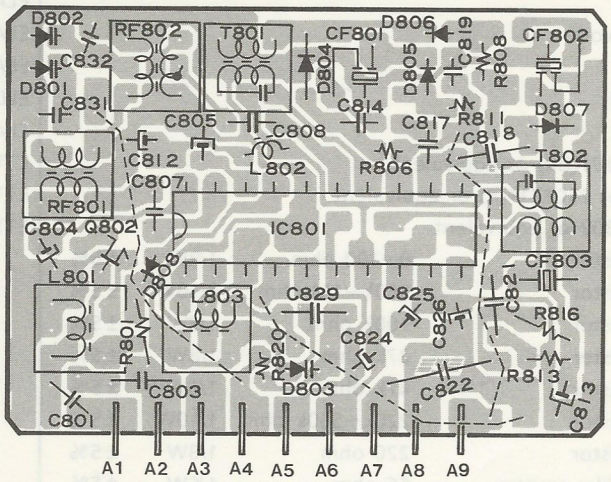

BOTTOM VIEW

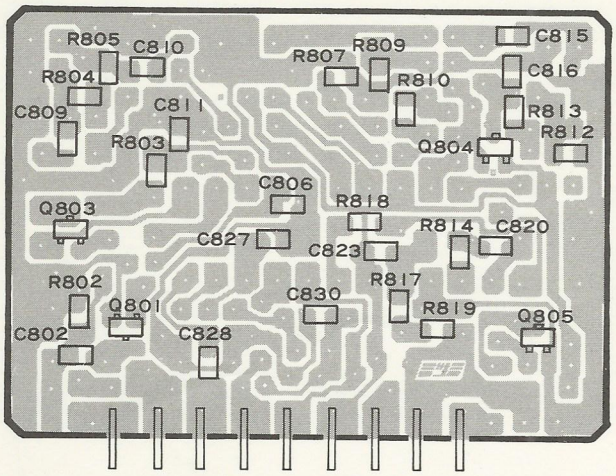

CHIP VIEW

REF. NO. 118 AR-0203 AM RF CIRCUIT BOARD ASSEMBLY PARTS LIST

REF. NO.	DESCRIPTION				PART NO.	MFR'S NO.
–	AM RF printed circuit board					440-1666-0000
C801, 803, 821	Monolithic capacitor	0.022μF	25V			262-223K-1EJR-011
C802	Chip capacitor	0.0018μF	50V			263-182K-1HJV-200
C804, 812	Electrolytic capacitor	22μF	10V			250-220M-1A00-012
C805, 825	Electrolytic capacitor	3.3μF	25V			250-3R3M-1H00-012
C806, 809, 810, 811, 820	Chip capacitor	0.022μF	50V			263-223K-1EJV-200
C807, 808, 814, 817, 818, 819	Monolithic capacitor	0.01μF	25V			262-103K-1EJR-005
C813	Electrolytic capacitor	33μF	10V			250-330M-1A00-021
C815, 816, 823	Chip capacitor	0.01μF	50V			263-103K-1EJV-200
C822	Ceramic capacitor	22pF	50V			260-220K-1H00-005
C824	Electrolytic capacitor	0.47μF	50V			250-R47M-1H00-012
C826	Electrolytic capacitor	4.7μF	25V			250-R47M-1E00-012
C827, 828	Chip capacitor	0.022μF	50V			263-223K-1EJV-210
C829	Q. P capacitor	360~430pF	50V	±5%		272-391J-2A00-012
C830, 831, 832	Ceramic capacitor	0~20pF	50V			260-200K-1HCH-200
CF801	Ceramic filter SFP450H				EOP-0016	360-0016-0400
CF802	Ceramic filter SFG450F				EOP-0060	360-0060-0400
CF803	Ceramic filter BFU450C4N				EOP-0017	360-0017-0400
D801, 802, 803	Variable capacitance diode SVC321SP or equivalent				ETD-SVC321SP	305-0014-0000
D804, 805, 806, 807, 808	Switching diode 1SS110 or equivalent				ETD-1SS110	304-0041-0000
IC801	AM IC LA1135				ETI-LA1135	310-0148-0000
L801	Coil R12-0170X				ELD-0330	351-0330-1300
L802	Inductor 56μH				ELD-0343	351-0343-1200
L803	OSC coil R12-2908X				ELD-0333	351-0333-1300
Q801, 803, 805	Transistor 2SC2814(F4) or equivalent				ETTC-2SC2814	302-0083-1200
Q802	FET 2SK163(M) or equivalent				ETTF-2SK163	300-0043-1200
Q804	Transistor 2SA1342				ETTA-2SA1342	301-0058-0000
R801	Carbon film resistor	10k ohm	1/6W	±5%		200-103J-2C00-010
R802	Chip resistor	1M ohm	1/10W	±5%		202-105J-2A00-050
R803	Chip resistor	22 ohm	1/10W	±5%		202-220J-2A00-050
R804, 805	Chip resistor	220k ohm	1/10W	±5%		202-224J-2A00-050
R806, 808, 811	Carbon film resistor	10k ohm	1/6W	±5%		200-103J-2C00-000
R807, 809, 812	Chip resistor	1k~10k ohm	1/10W	±5%		202-103J-2A00-050
R810	Chip resistor	0~560 ohm	1/10W	±5%		202-561J-2A00-050
R813, 817, 819	Chip resistor	10k ohm	1/10W	±5%		202-103J-2A00-050
R814	Chip resistor	51~220 ohm	1/10W	±5%		202-221J-2A00-050
R815	Carbon film resistor	100k~1M ohm	1/6W	±5%		200-105J-2C00-000
R816	Carbon film resistor	330~1k ohm	1/6W	±5%		200-102J-2C00-000
R818	Chip resistor	82 ohm	1/8W	±5%		202-820J-2B00-040
R820	Carbon film resistor	100k ohm	1/6W	±5%		200-104J-2C00-000
RF801	RF coil R12-4422X				ELD-0331	351-0331-1300
RF802	RF coil R12-4435X				ELD-0332	351-0332-1300
T801	IFT R12-4437A				ELD-0309	351-0309-1300
T802	IFT R12-8466A				ELD-0315	351-0315-1300

FM RF CIRCUIT BOARD COMPONENT LOCATION GUIDE

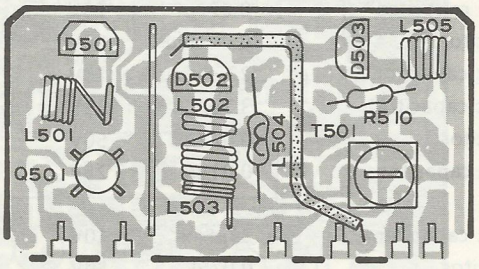

TOP VIEW

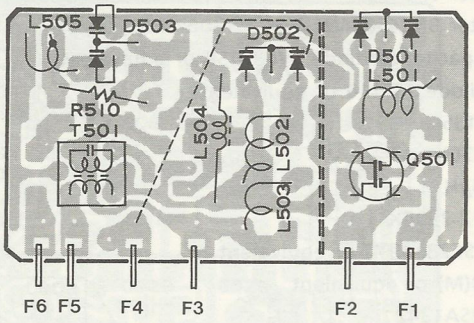

BOTTOM VIEW

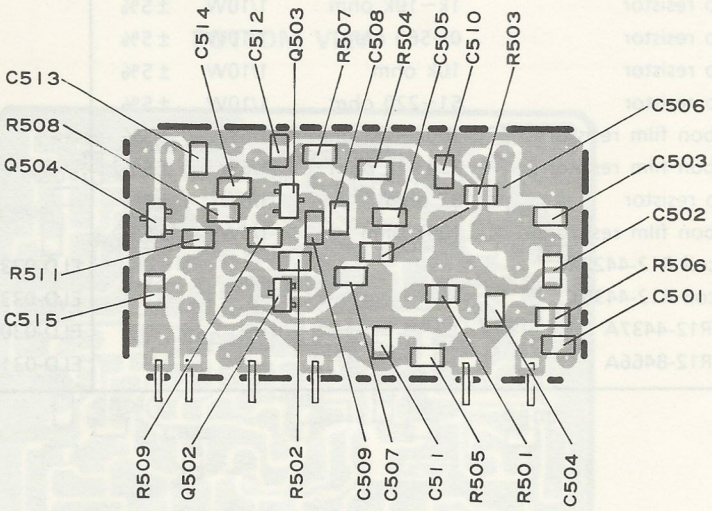

CHIP VIEW

REF. NO. 119 AR-0202 FM RF CIRCUIT BOARD ASSEMBLY PARTS LIST

REF. NO.	DESCRIPTION				PART NO.	MFR'S NO.
–	FM RF printed circuit board					440-1665-0000
C501	Chip ceramic capacitor	9pF	SL			260-9R0D-1H00-200
C502	Chip ceramic capacitor	5pF	SL			260-5R0D-1H00-210
C503	Chip ceramic capacitor	0~5pF	CK			260-5R0D-1HCK-210
C504	Chip ceramic capacitor	0.001μF	WR			263-102K-1HAR-210
C505	Chip ceramic capacitor	0~5pF	UJ			260-5R0D-1HUJ-210
C506	Chip ceramic capacitor	5pF	UJ			260-5R0D-1HUJ-210
C507	Chip ceramic capacitor	22pF	SL			260-220K-1H00-210
C508	Chip ceramic capacitor	150pF	SL			260-151K-1H00-210
C509	Chip ceramic capacitor	3pF	CJ			260-3R0D-1HCJ-210
C510	Chip ceramic capacitor	0.0047μF	YV			263-472K-1HJV-200
C511	Chip ceramic capacitor	0.02μF	YV			263-203K-1HJV-210
C512	Chip ceramic capacitor	56pF	TH			260-560K-1HTH-210
C513	Chip ceramic capacitor	5~10pF	UJ			260-100D-1HUJ-210
C514	Chip ceramic capacitor	3pF	UJ			260-3R0D-1HUJ-210
C515	Chip ceramic capacitor	47pF	SL			260-470D-1H00-210
D501, 502, 503	Variable capacitance diode 1SV103 or equivalent				ETD-1SV103	305-0013-0000
L501	ANT coil				ELA-0117	352-0117-1300
L502	RF load coil				ELA-0118	352-0118-1300
L503	RF coil				ELA-0119	352-0119-1300
L504	Trap coil				ELD-0328	351-0328-1200
L505	OSC coil				ELA-0120	352-0120-1300
Q501	FET 3SK101(GR) or equivalent				ETTF-3SK101	300-0020-1100
Q502, 503	Transistor 2SC2714(R) or equivalent				ETTC-2SC2714	302-0081-1000
Q504	FET 3SK302 or equivalent				ETTF-3SK302	300-0049-0000
R501	Chip resistor	0~100 ohm	1/8W	±5%		202-101J-2B00-040
R502	Chip resistor	560k~1M ohm	1/10W	±5%		202-105J-2A00-050
R503, 504, 507	Chip resistor	100k ohm	1/8W	±5%		202-104J-2B00-040
R505	Chip resistor	27k ohm	1/8W	±5%		202-273J-2B00-040
R506	Chip resistor	47k ohm	1/8W	±5%		202-473J-2B00-040
R508	Chip resistor	220k~560k ohm	1/10W	±5%		202-564J-2A00-050
R509	Chip resistor	220 ohm	1/8W	±5%		202-221J-2B00-040
R510	Carbon film resistor	56 ohm	1/6W	±5%		200-560J-2C00-010
R511	Chip resistor	470 ohm	1/10W	±5%		202-471J-2A00-050
T501	IFT 10.7MHz 41K5-D				ELD-0329	351-0329-1300

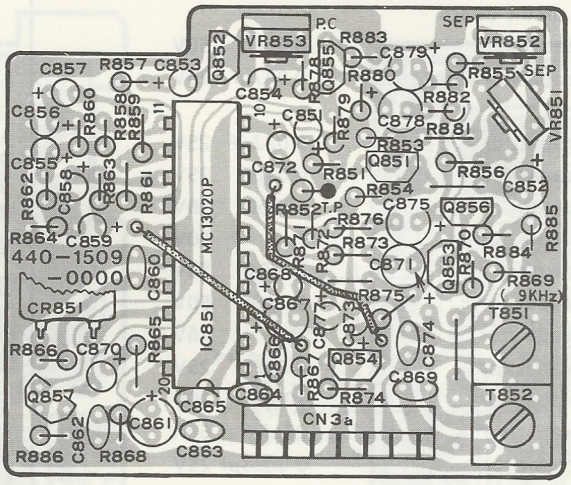

TOP VIEW

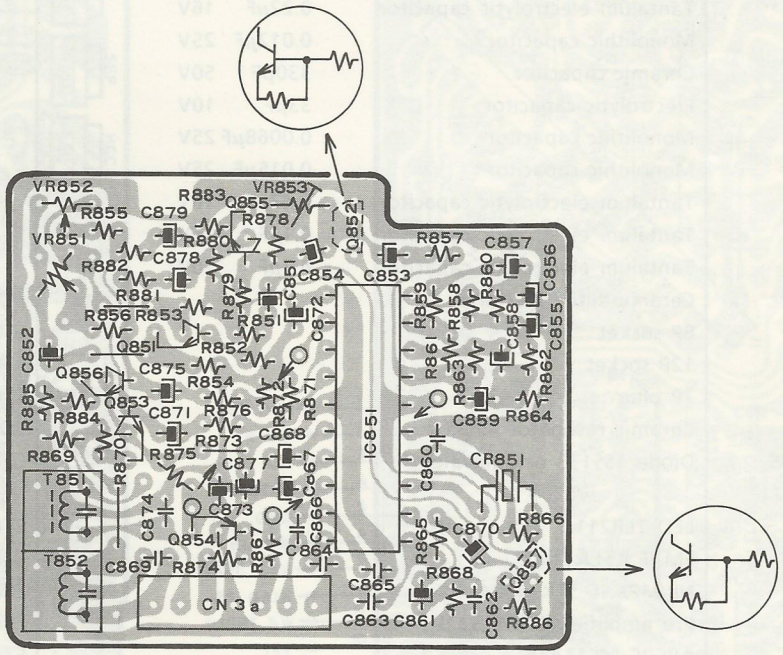

BOTTOM VIEW

REF. NO. 117 CRP-1394 AM STEREO CIRCUIT BOARD ASSEMBLY PARTS LIST

REF. NO.	DESCRIPTION				PART NO.	MFR'S NO.
–	AM stereo printed circuit board					440-1509-0000
C851, 853, 854, 855, 857, 870, 877	Tantalum electrolytic capacitor	4.7μF	10V			255-4R7M-1A00-021
C852, 867, 878	Electrolytic capacitor	10μF	16V			250-100M-1C00-012
C856, 872, 873	Tantalum electrolytic capacitor	2.2μF	10V			255-2R2M-1A00-020
C858, 859	Tantalum electrolytic capacitor	0.47μF	16V			255-R47M-1C00-020
C860	Ceramic capacitor	50pF (CSC500K7)				290-0007-0000
C861	Electrolytic capacitor	47μF	6.3V			250-470M-0J00-019
C862, 863, 864, 865	Monolithic capacitor	0.0033μF	25V			262-332K-1EJR-005
C866	Monolithic capacitor	0.01μF	25V			262-103M-1EJR-005
C868	Tantalum electrolytic capacitor	0.1μF	16V			255-R10M-1C00-020
C869, 874	Monolithic capacitor	0.0047μF	25V			262-472K-1EJR-005
C871, 875	Electrolytic capacitor	2.2μF	50V			250-2R2M-1H00-012
C879	Electrolytic capacitor	10μF	16V			250-100M-1C00-011
CN3a	7P socket				ESC-0211	412-0211-0000
CR851	Ceramic resonator (CSA3.6MT7)				EOC-0021	361-0021-0400
IC851	AM stereo decoder IC MC13020P				ETI-MC13020P	310-0159-0000
Q851	Transistor 2SC2458L(BL) or equivalent				ETTC-2SC2458L	302-0078-1400
Q852, 857	Digital transistor DTC144ES				ETTC-DTC144ES	302-0115-0000
Q853, 855, 856	Transistor 2SC2603(F) or equivalent				ETTC-2SC2603	302-0091-1200
Q854	Transistor 2SA1115(E) or equivalent				ETTA-2SA1115	301-0033-1100
R851, 863, 878, 879	Carbon film resistor	220k ohm	1/6W	±5%		200-224J-2C00-000
R852, 874, 875	Carbon film resistor	100k ohm	1/6W	±5%		200-104J-2C00-000
R853, 854	Carbon film resistor	2.2k ohm	1/6W	±5%		200-222J-2C00-000
R855, 856	Carbon film resistor	15k ohm	1/6W	±5%		200-153J-2C00-000
R857	Carbon film resistor	33k ohm	1/6W	±5%		200-333J-2C00-000
R858, 868	Carbon film resistor	430 ohm	1/6W	±5%		200-431J-2C00-000
R859, 860, 862, 870, 884	Carbon film resistor	1.5k ohm	1/6W	±5%		200-152J-2C00-000
R861	Carbon film resistor	56k ohm	1/6W	±5%		200-563J-2C00-000
R864	Carbon film resistor	910 ohm	1/6W	±5%		200-911J-2C00-000
R865, 881, 882	Carbon film resistor	22k ohm	1/6W	±5%		200-223J-2C00-000
R866	Carbon film resistor	82 ohm	1/6W	±5%		200-820J-2C00-000
R867	Carbon film resistor	330 ohm	1/6W	±5%		200-331J-2C00-000
R869, 871, 872, 880, 883, 885	Carbon film resistor	4.7k ohm	1/6W	±5%		200-472J-2C00-000
R873, 876	Carbon film resistor	10k ohm	1/6W	±5%		200-103J-2C00-000
R886	Carbon film resistor	560k ohm	1/6W	±5%		200-564J-2C00-000
T851, 852	Notch coil 9kHz				ELD-0342	351-0342-1000
VR851, 852, 853	Trimmer resistor	22k ohm-B			ECRV-0363	340-0363-0100

FM CIRCUIT BOARD COMPONENT LOCATION GUIDE

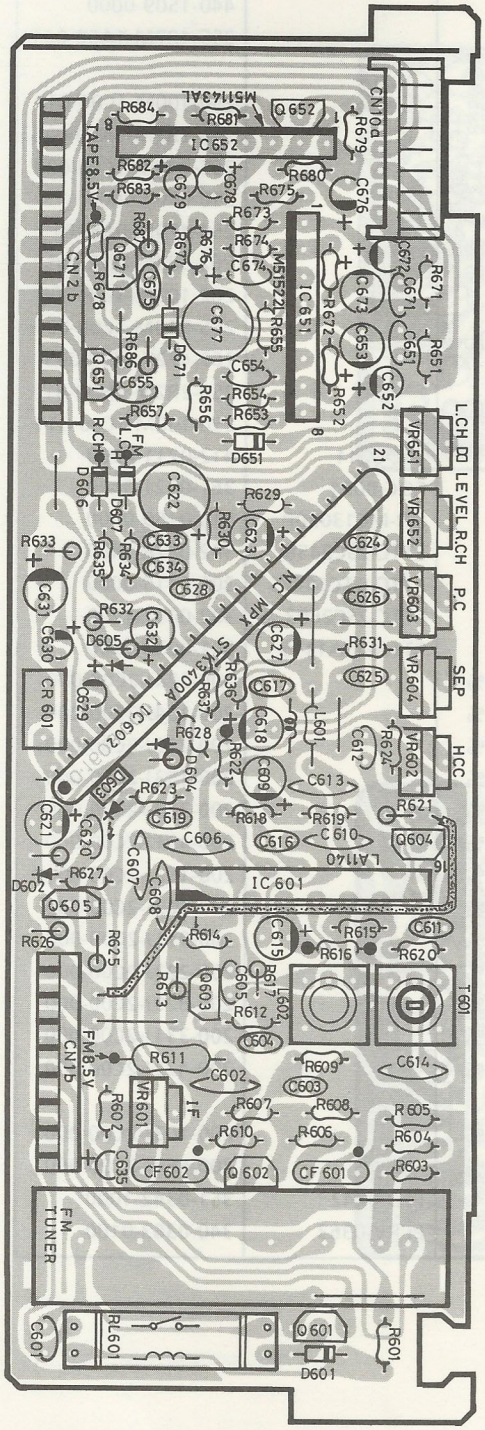

TOP VIEW

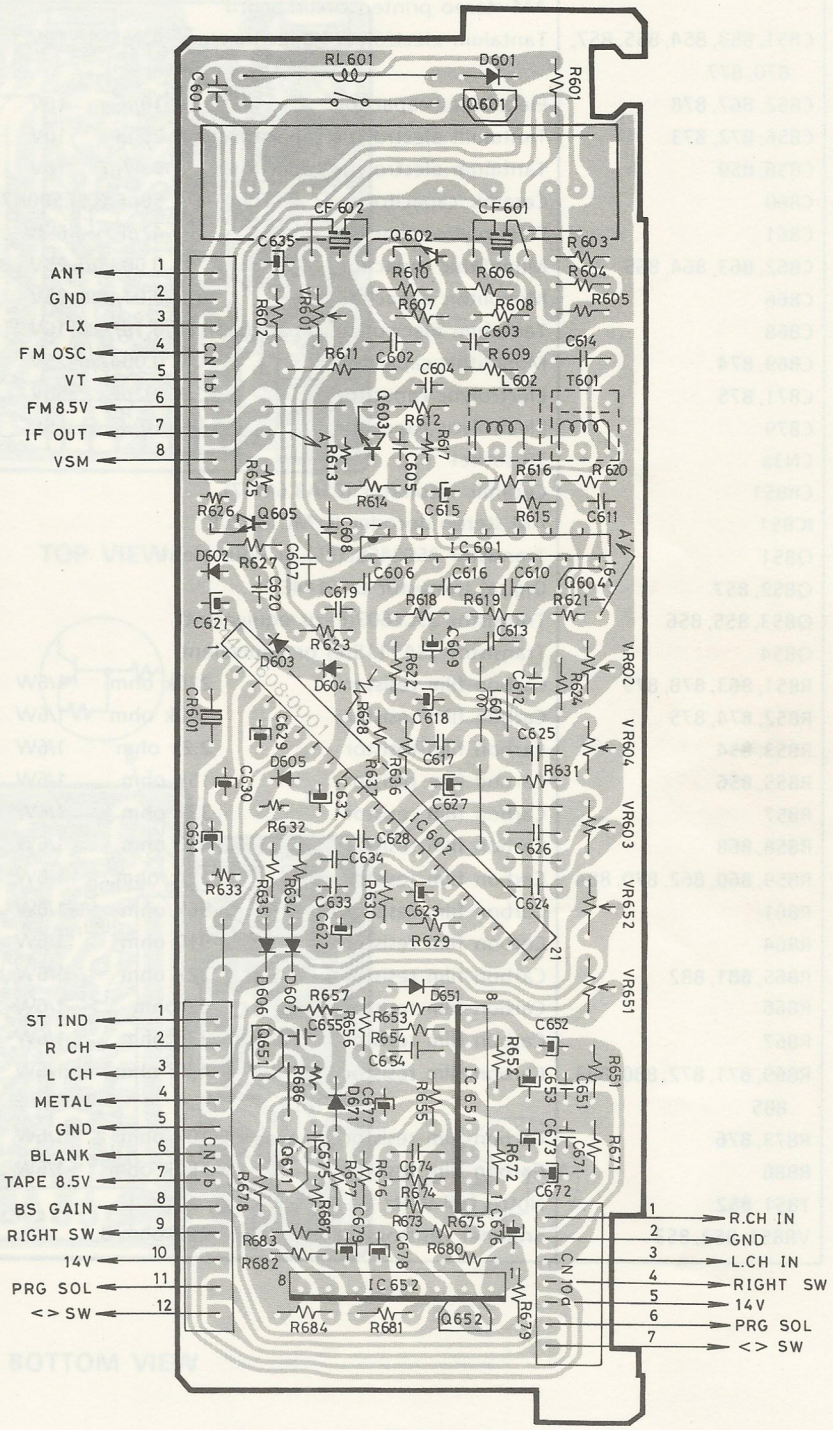

BOTTOM VIEW

REF. NO. 115 CRP-1391-1 FM CIRCUIT BOARD ASSEMBLY PARTS LIST

REF. NO.	DESCRIPTION				PART NO.	MFR'S NO.
–	FM printed circuit board					440-1608-0001
C601	Ceramic capacitor	0.5pF	50V			260-R50C-1H00-005
C602, 606, 607, 608, 610, 613, 614	Monolithic capacitor	0.047μF	25V			262-473M-1EJR-020
C603, 620	Monolithic capacitor	0.022μF	25V			262-223M-1EJR-010
C604, 619	Monolithic capacitor	0.01μF	25V			262-103M-1EJR-005
C605, 617	Ceramic capacitor	100pF	50V			260-101K-1H00-010
C609, 631	Electrolytic capacitor	1μF	50V			250-1R0M-1H00-012
C611, 612, 616	Ceramic capacitor	33pF	50V			260-330K-1H00-005
C615	Electrolytic capacitor	2.2μF	50V			250-2R2M-1H00-012
C618	Electrolytic capacitor	10μF	16V			250-100M-1C00-012
C621, 627, 632	Electrolytic capacitor	4.7μF	25V			250-4R7M-1E00-012
C622, 677	Electrolytic capacitor	100μF	10V			250-101M-1A00-033
C623	Electrolytic capacitor	22μF	6.3V			250-220M-0J00-012
C624	Monolithic capacitor	0.0033μF	25V			262-332M-1EJR-006
C625	Monolithic capacitor	0.001μF	25V			262-102M-1EJR-006
C626	Monolithic capacitor	0.033μF	25V			262-333M-1EJR-016
C628	Monolithic capacitor	0.01μF	25V			262-103K-1EJR-005
C629, 635, 652, 672	Tantalum electrolytic capacitor	1μF	16V			255-1R0M-1C00-020
C630	Tantalum electrolytic capacitor	0.22μF	16V			255-R22M-1C00-020
C633, 634	Monolithic capacitor	0.012μF	25V			262-123K-1EJR-005
C651, 671	Ceramic capacitor	330pF	50V			261-331K-1HJB-005
C653, 673	Electrolytic capacitor	33μF	10V			250-330M-1A00-021
C654, 674	Monolithic capacitor	0.0068μF	25V			262-682K-1EJR-006
C655, 675	Monolithic capacitor	0.015μF	25V			262-153K-1EJR-005
C676	Tantalum electrolytic capacitor	0.47μF	16V			255-R47M-1C00-020
C678	Tantalum electrolytic capacitor	0.1μF	16V			255-R10M-1C00-020
C679	Tantalum electrolytic capacitor	4.7μF	10V			255-4R7M-1A00-021
CF601, 602	Ceramic filter 10.7MHz				EOP-0010-1	360-0010-0401
CN1b	8P socket				ESC-0351	412-0351-0000
CN2b	12P socket				ESC-0353	412-0353-0000
CN10a	7P plug				ESC-0248	412-0248-0000
CR601	Ceramic resonator 456kHz				EOC-0024	361-0024-0400
D601, 602, 604, 605, 606, 607, 651, 671	Diode 1SS133 or equivalent				ETD-1SS133	304-0033-0000
D603	LED TLR211				ETD-TLR211	320-0027-0000
IC601	FM IF IC LA1140				ETI-LA1140	310-0083-0000
IC602	NB/MPX IC STK3400A				ETI-STK3400A	310-0310-0000
IC651	Pre amplifier IC M51522L				ETI-M51522L	310-0062-0000
IC652	APS IC M51143AL				ETI-M51143AL	310-0086-0000
L601	Inductor 4.7μH				ELD-0196	351-0196-1200
L602	Inductor				ELD-0209	351-0209-0900
Q601, 651, 671	Digital transistor DTC124ES				ETTC-DTC124ES	302-0125-0000
Q602, 603	Transistor 2SC930(D) or equivalent				ETTC-2SC930	302-0014-1000
Q604	Digital transistor DTC144ES				ETTC-DTC144ES	302-0115-0000
Q605	Transistor 2SC2458L(BL)				ETTC-2SC2458L	302-0078-1400
Q652	Digital transistor UN4210				ETTC-UN4210	302-0127-0000
R601, 678	Carbon film resistor	100 ohm	1/6W	±5%		200-101J-2C00-010
R602	Carbon film resistor	10 ohm	1/6W	±5%		200-100J-2C00-010
R603, 605	Carbon film resistor	1.8k ohm	1/6W	±5%		200-182J-2C00-010

REF. NO.	DESCRIPTION				PART NO.	MFR'S NO.
R604, 652, 672	Carbon film resistor	150 ohm	1/6W	±5%		200-151J-2C00-010
R606, 610, 612	Carbon film resistor	330 ohm	1/6W	±5%		200-331J-2C00-010
R607, 609, 634, 635	Carbon film resistor	1k ohm	1/6W	±5%		200-102J-2C00-010
R608, 623	Carbon film resistor	2.2k ohm	1/6W	±5%		200-222J-2C00-010
R611	Carbon film resistor	1k ohm	1/4W	±5%		200-102J-2E00-010
R613, 686, 687	Carbon film resistor	100k ohm	1/6W	±5%		200-104J-2C00-000
R614	Carbon film resistor	33k ohm	1/6W	±5%		200-333J-2C00-010
R615, 628	Carbon film resistor	15k ohm	1/6W	±5%		200-153J-2C00-010
R616, 618, 624	Carbon film resistor	10k ohm	1/6W	±5%		200-103J-2C00-010
R617, 621	Carbon film resistor	15k ohm	1/6W	±5%		200-153J-2C00-000
R619, 655, 675	Carbon film resistor	12k ohm	1/6W	±5%		200-123J-2C00-010
R620	Carbon film resistor	68k ohm	1/6W	±5%		200-683J-2C00-010
R622, 657, 677	Carbon film resistor	4.7k ohm	1/6W	±5%		200-472J-2C00-010
R625	Carbon film resistor	1M ohm	1/6W	±5%		200-105J-2C00-000
R626	Carbon film resistor	220 ohm	1/6W	±5%		200-221J-2C00-000
R627, 656, 676	Carbon film resistor	3.9k ohm	1/6W	±5%		200-392J-2C00-010
R629	Carbon film resistor	820 ohm	1/6W	±5%		200-821J-2C00-010
R630	Carbon film resistor	47k ohm	1/6W	±5%		200-473J-2C00-010
R631	Carbon film resistor	39k ohm	1/6W	±5%		200-393J-2C00-010
R632	Carbon film resistor	33k ohm	1/6W	±5%		200-333J-2C00-000
R633	Carbon film resistor	5.1k ohm	1/6W	±5%		200-512J-2C00-000
R636, 637	Carbon film resistor	3.3k ohm	1/6W	±5%		200-332J-2C00-010
R651, 671	Carbon film resistor	100k ohm	1/6W	±5%		200-104J-2C00-010
R653, 673, 679, 681	Carbon film resistor	470k ohm	1/6W	±5%		200-474J-2C00-010
R654, 674	Carbon film resistor	20k ohm	1/6W	±5%		200-203J-2C00-010
R680	Carbon film resistor	1.2M ohm	1/6W	±5%		200-125J-2C00-010
R682, 683, 684	Carbon film resistor	22k ohm	1/6W	±5%		200-223J-2C00-010
RL601	Read relay				ESR-0068	402-0068-2600
T601	Detector coil 10.7MHz				ELD-0210	351-0210-0900
VR601	Trimmer resistor	330 ohm-B			ECRV-1009	340-1009-0200
VR602	Trimmer resistor	20k ohm-B			ECRV-1014	340-1014-0200
VR603, 651, 652	Trimmer resistor	50k ohm-B			ECRV-1015	340-1015-0200
VR604	Trimmer resistor	5k ohm-B			ECRV-1012	340-1012-0200

NR CIRCUIT BOARD COMPONENT LOCATION GUIDE

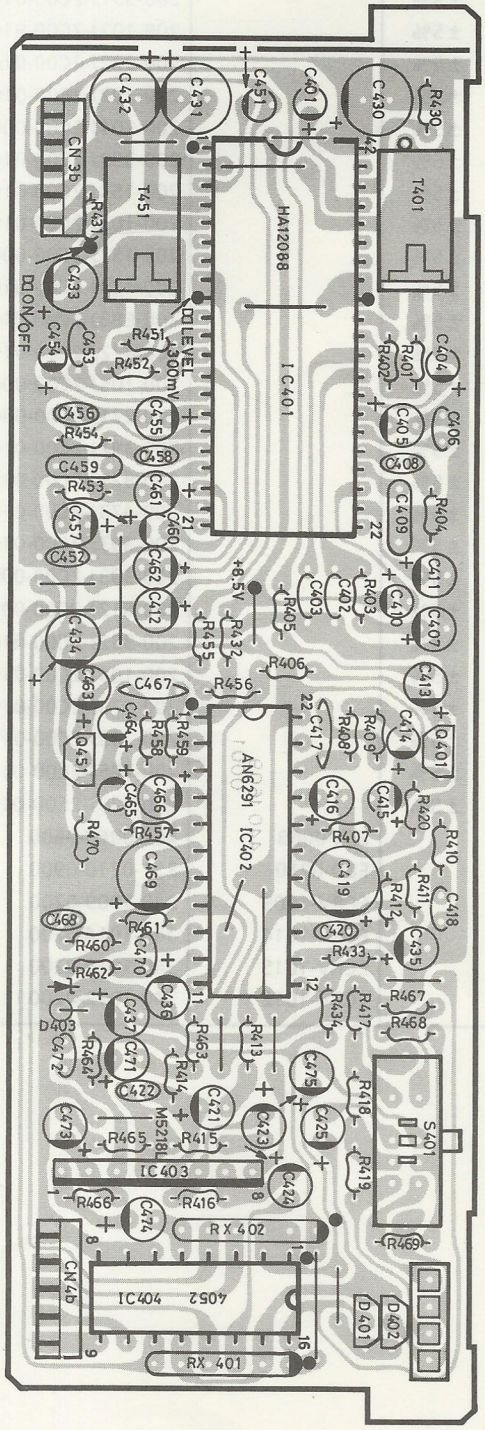

TOP VIEW

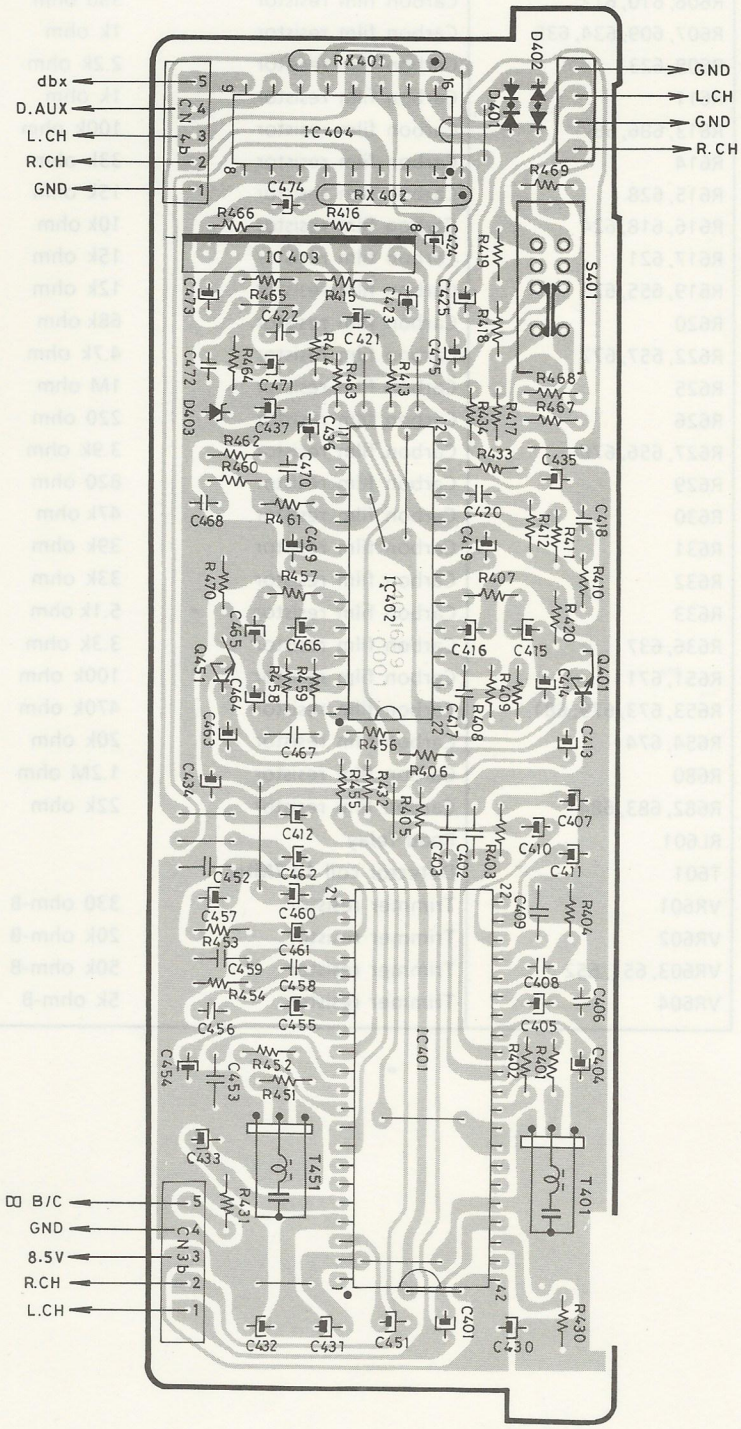

BOTTOM VIEW

REF. NO. 113 CAP-1465 NR CIRCUIT BOARD ASSEMBLY PARTS LIST

REF. NO.	DESCRIPTION				PART NO.	MFR'S NO.
–	NR printed circuit board					440-1609-0001
C401, 415, 451, 465	Tantalum electrolytic capacitor	0.33μF	16V			255-R33M-1C00-020
C402, 452	Monolithic capacitor	0.018μF	25V			262-183K-1EJR-011
C403, 453	Monolithic capacitor	0.01μF	25V			262-103K-1EJR-006
C404, 410, 454, 460	Tantalum electrolytic capacitor	0.68μF	16V			255-R68M-1C00-020
C405, 411, 412, 421, 424, 455, 461, 462, 471, 474	Electrolytic capacitor	2.2μF	50V			250-2R2M-1H00-012
C406, 456	Monolithic capacitor	0.018μF	25V			262-183K-1EJR-010
C407, 413, 436, 457, 463	Electrolytic capacitor	1μF	50V			250-1R0M-1H00-012
C408, 422, 458, 472	Monolithic capacitor	0.01μF	25V			262-103K-1EJR-005
C409, 459	Polyester film capacitor	0.082μF	50V			275-823J-1H00-001
C414, 464	Tantalum electrolytic capacitor	0.47μF	16V			255-R47M-1C00-020
C416, 435, 466	Electrolytic capacitor	10μF	16V			250-100M-1C00-012
C417, 467	Monolithic capacitor	0.033μF	25V			262-333K-1EJR-016
C418, 468	Monolithic capacitor	0.0047μF	25V			262-472K-1EJR-005
C419, 469	Electrolytic capacitor	47μF	10V			250-470M-1A00-033
C420, 470	Monolithic capacitor	0.022μF	25V			262-223K-1EJR-010
C423, 425, 473, 475	Electrolytic capacitor	4.7μF	25V			250-4R7M-1E00-012
C430	Electrolytic capacitor	100μF	10V			250-101M-1A00-033
C431, 432	Electrolytic capacitor	220μF	6.3V			250-221M-0J00-033
C433, 434	Electrolytic capacitor	22μF	10V			250-220M-1A00-021
C437	Electrolytic capacitor	22μF	6.3V			250-220M-0J00-012
CN3b, 4b	5P socket				ESC-0350	412-0350-0000
D401	Diode MC921				ETD-MC921	304-0051-0000
D402	Diode MC911				ETD-MC911	304-0062-0000
D403	Zener diode RD4.3E(B2)				ETD-RD4.3E	306-0048-1100
IC401	Dolby B/C IC HA12088ANT				ETI-HA12088ANT	310-0241-0000
IC402	dbx IC AN6291				ETI-AN6291	310-0260-0000
IC403	Operational amplifier IC M5218L				ETI-M5218L	310-0107-0000
IC404	Analogue switch IC HD14052BP or equivalent				ETI-HD14052BP	310-0225-0000
Q401, 451	Transistor 2SC2458L(BL) or equivalent				ETTC-2SC2458L	302-0078-1400
R401, 409, 433, 451, 459	Carbon film resistor	1k ohm	1/6W	±5%		200-102J-2C00-010
R402, 407, 415, 434, 452, 465, 470	Carbon film resistor	3.3k ohm	1/6W	±5%		200-332J-2C00-010
R403, 453	Carbon film resistor	68k ohm	1/6W	±5%		200-683J-2C00-010
R404, 454	Carbon film resistor	100 ohm	1/6W	±5%		200-101J-2C00-010
R405, 406, 414, 416, 455, 456, 464, 466	Carbon film resistor	47k ohm	1/6W	±5%		200-473J-2C00-010
R407, 411, 457, 461	Carbon film resistor	16k ohm	1/6W	±5%		200-163J-2C00-010
R408, 458	Carbon film resistor	10k ohm	1/6W	±5%		200-103J-2C00-010
R410, 460	Carbon film resistor	150 ohm	1/6W	±5%		200-151J-2C00-010
R412, 419, 462, 469	Carbon film resistor	4.7k ohm	1/6W	±5%		200-472J-2C00-010
R413, 463	Carbon film resistor	560 ohm	1/6W	±5%		200-561J-2C00-010
R417, 467	Carbon film resistor	680 ohm	1/6W	±5%		200-681J-2C00-010
R418, 468	Carbon film resistor	1.8k ohm	1/6W	±5%		200-182J-2C00-010
R430	Carbon film resistor	22k ohm	1/6W	±5%		200-223J-2C00-010
R431	Carbon film resistor	12k ohm	1/6W	±5%		200-123J-2C00-010
R432	Carbon film resistor	910 ohm	1/6W	±5%		200-911J-2C00-010
RX401, 402	Resistor array	470k ohm×5			ECX-0068	370-0068-0100
S401	Slide switch				ESS-0533	400-0533-0100
T401, 451	Dolby C coil				ELD-0307	351-0307-0900
	Coil printed circuit board					440-1615-0000

GRAPHIC EQUALIZER CIRCUIT BOARD COMPONENT LOCATION GUIDE

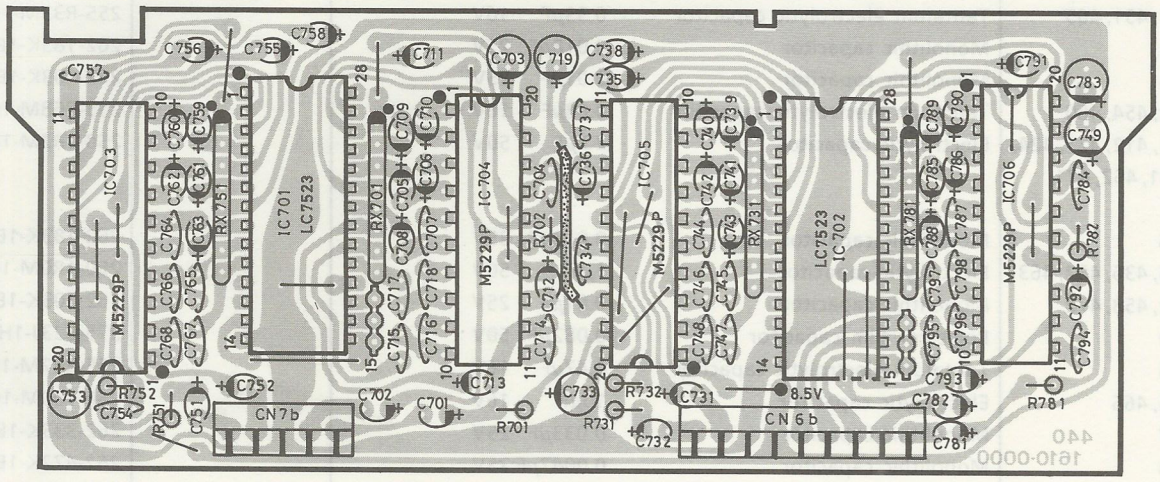

TOP VIEW

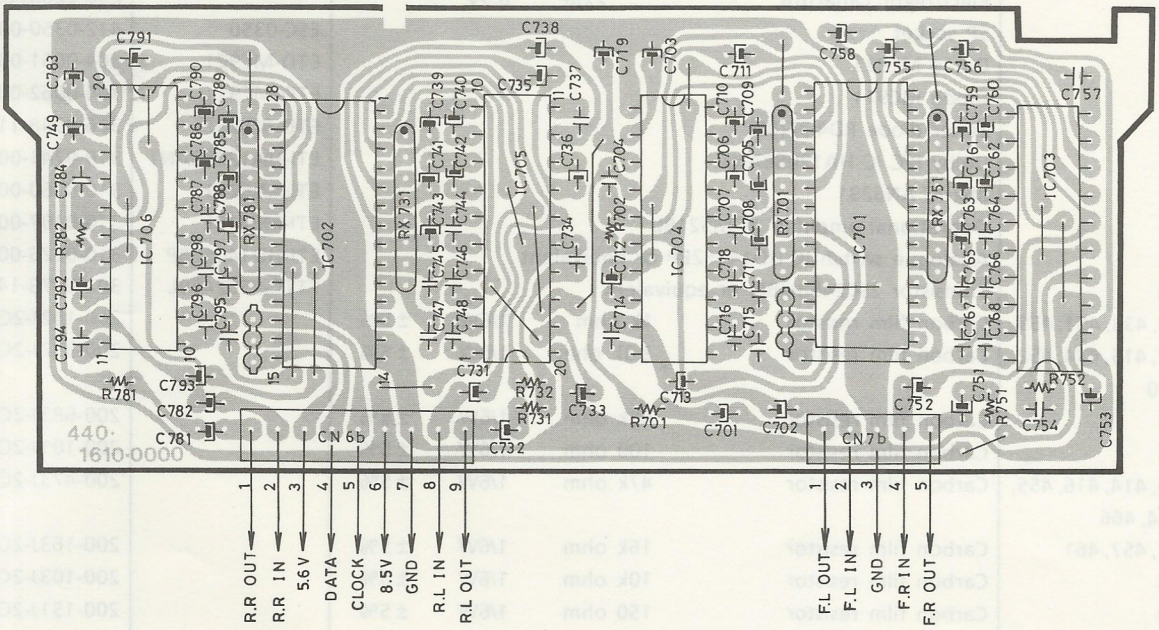

BOTTOM VIEW

REF. NO. 129 CAP-1395 GRAPHIC EQUALIZER CIRCUIT BOARD ASSEMBLY PARTS LIST

REF. NO.	DESCRIPTION				PART NO.	MFR'S NO.
–	Graphic equalizer printed circuit board					440-1610-0000
C701, 702, 731, 732, 751, 752, 781, 782	Tantalum electrolytic capacitor	3.3μF	10V			255-3R3M-1A00-021
C703, 753, 783	Electrolytic capacitor	22μF	6.3V			250-220M-0J00-012
C704, 734, 754, 784	Ceramic capacitor	470pF	50V			261-471K-1HJB-005
C705, 735, 755, 785	Tantalum electrolytic capacitor	0.47μF	16V			255-R47M-1C00-020
C706, 708, 736, 738, 756, 758, 786, 788	Tantalum electrolytic capacitor	0.1μF	16V			255-R10M-1C00-020
C707, 737, 757, 787	Monolithic capacitor	0.012μF	25V			262-123K-1EJR-005
C709, 739, 759, 789	Tantalum electrolytic capacitor	1μF	16V			255-1R0M-1C00-020
C710, 740, 760, 790	Tantalum electrolytic capacitor	0.33μF	16V			255-R33M-1C00-020
C711, 741, 761, 791	Tantalum electrolytic capacitor	0.22μF	16V			255-R22M-1C00-020
C712, 713, 742, 743, 762, 763, 792, 793	Tantalum electrolytic capacitor	0.033μF	35V			255-333M-1F00-024
C714, 744, 764, 794	Monolithic capacitor	0.0068μF	25V			262-682K-1EJR-005
C715, 745, 765, 795	Monolithic capacitor	0.015μF	25V			262-153K-1EJR-005
C716, 746, 766, 796	Monolithic capacitor	0.0022μF	25V			262-222K-1EJR-005
C717, 747, 767, 797	Monolithic capacitor	0.0082μF	25V			262-822K-1EJR-005
C718, 748, 768, 798	Monolithic capacitor	0.001μF	25V			262-102K-1EJR-005
C719, 749	Electrolytic capacitor	10μF	16V			250-100M-1C00-012
C733	Electrolytic capacitor	22μF	6.3V			250-220M-0J00-010
CN6b	9P socket				ESC-0352	412-0352-0000
CN7b	5P socket				ESC-350	412-0350-0000
IC701, 702	Electronic volume IC LC7523				ETI-LC7523	310-0295-0000
IC703, 704, 705, 706	Graphic equalizer IC M5229P				ETI-M5229P	310-0312-0000
R701, 731, 751, 781	Carbon film resistor	680 ohm	1/6W	±5%		200-681J-2C00-000
R702, 732, 752, 782	Carbon film resistor	4.7k ohm	1/6W	±5%		200-472J-2C00-000
RX701, 731, 751, 781	Resistor array	1M ohm×7			ECX-0089	370-0089-0100
	Flat cable				WX-0242	471-0242-0000

RELAY CIRCUIT BOARD COMPONENT LOCATION GUIDE

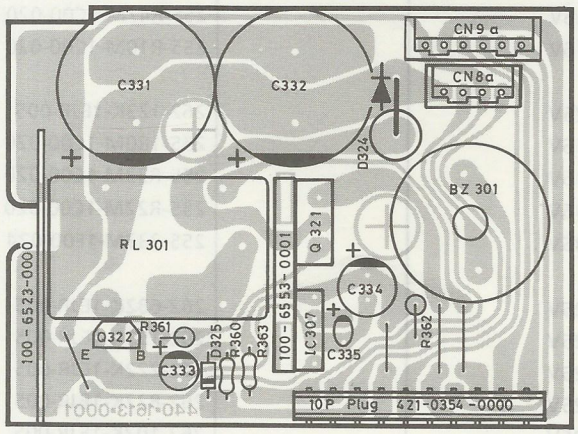

TOP VIEW

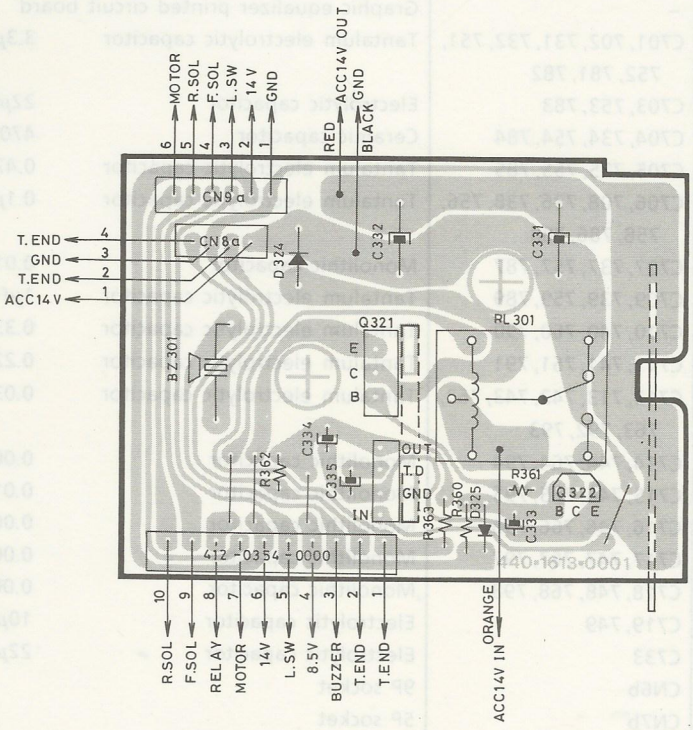

BOTTOM VIEW

REF. NO. 130 CTP-1466 RELAY CIRCUIT BOARD ASSEMBLY PARTS LIST

REF. NO.	DESCRIPTION				PART NO.	MFR'S NO.
–	Relay printed circuit board					440-1613-0001
BZ301	Buzzer				EAS-0053	461-0053-0400
C331, 332	Electrolytic capacitor	2200μF	16V			250-222M-1C00-073
C333	Electrolytic capacitor	10μF	16V			250-100M-1C00-012
C334	Electrolytic capacitor	100μF	10V			250-101M-1A00-025
C335	Tantalum electrolytic capacitor	0.1μF	16V			255-R10M-1C00-020
CN8a	4P plug				ESC-0359	412-0359-0000
CN9a	6P plug				ESC-0243	412-0243-0000
D324	Diode GP30B				ETD-GP30B	304-0034-0000
D325	Diode 1SS133 or equivalent				ETD-1SS133	304-0033-0000
IC307	Voltage regulator IC AN6540				ETI-AN6540	310-0120-0000
Q321	Transistor 2SB1099(L)				ETTB-2SB1099	301-0041-1100
Q322	Digital transistor DTC124ES				ETTC-DTC124ES	302-0125-0000
R360	Carbon film resistor	22k ohm	1/6W	±5%		200-223J-2C00-010
R361	Carbon film resistor	1.5k ohm	1/6W	±5%		200-152J-2C00-000
R362	Carbon film resistor	68k ohm	1/6W	±5%		200-683J-2C00-000
R363	Carbon film resistor	68k ohm	1/6W	±5%		200-683J-2C00-010
RL301	Relay				ESR-0001	401-0001-2600
	10P L Plug				ESC-0354	412-0354-0000
	Holder - PCB				PP-0523	100-6523-0000
	Heatsink plate				PP-0553-1	100-6553-0001

MOTOR CONTROL CIRCUIT BOARD COMPONENT LOCATION GUIDE

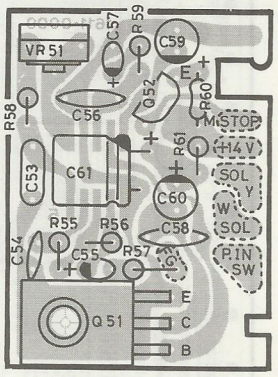

TOP VIEW

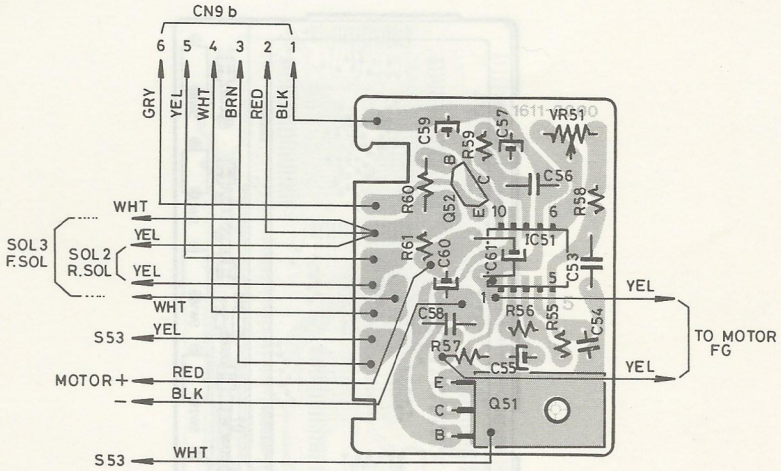

BOTTOM VIEW

REF. NO. 78 CAP-1396 MOTOR CONTROL CIRCUIT BOARD ASSEMBLY PARTS LIST

REF. NO.	DESCRIPTION				PART NO.	MFR'S NO.
–	Motor control printed circuit board					440-1611-0000
C53	Polyester film capacitor	0.033μF	50V			275-333J-1H00-001
C54	Monolithic capacitor	0.0047μF	25V			262-472K-1EJR-005
C55	Tantalum electrolytic capacitor	0.22μF	16V			255-R22M-1C00-020
C56	Monolithic capacitor	0.033μF	25V			262-333K-1EJR-016
C57	Tantalum electrolytic capacitor	1μF	16V			255-1R0M-1C00-020
C58	Monolithic capacitor	0.047μF	25V			262-473K-1EJR-020
C59	Electrolytic capacitor	10μF	16V			250-100M-1C00-012
C60	Electrolytic capacitor	4.7μF	25V			250-4R7M-1E00-012
C61	Electrolytic capacitor	100μF	16V			250-101M-1C00-033
IC51	FG servo IC M51971FP				ETI-M51971FP	310-0247-0000
Q51	Transistor 2SC1846(R)				ETTC-2SC1846	302-0121-1100
Q52	Digital transistor DTA124ES				ETTA-DTA124ES	301-0046-0000
R55	Carbon film resistor	33k ohm	1/6W	±5%		200-333J-2C00-000
R56	Carbon film resistor	4.7k ohm	1/6W	±5%		200-472J-2C00-000
R57	Carbon film resistor	2.2k ohm	1/6W	±5%		200-222J-2C00-000
R58	Metal film resistor	39k ohm	1/6W	±5%		202-393F-2C00-000
R59	Carbon film resistor	68k ohm	1/6W	±5%		200-683J-2C00-000
R60	Carbon film resistor	100 ohm	1/6W	±5%		200-101J-2C00-010
R61	Carbon film resistor	3.3 ohm	1/6W	±5%		200-3R3J-2C00-000
VR51	Trimmer resistor	6.8k ohm-B			ECRV-1017	340-1017-0100

LCD DISPLAY CIRCUIT BOARD COMPONENT LOCATION GUIDE

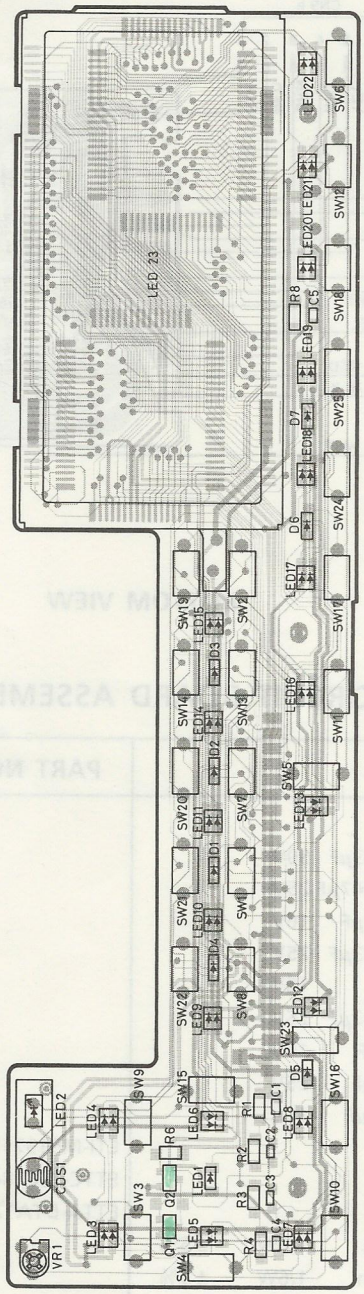

TOP VIEW

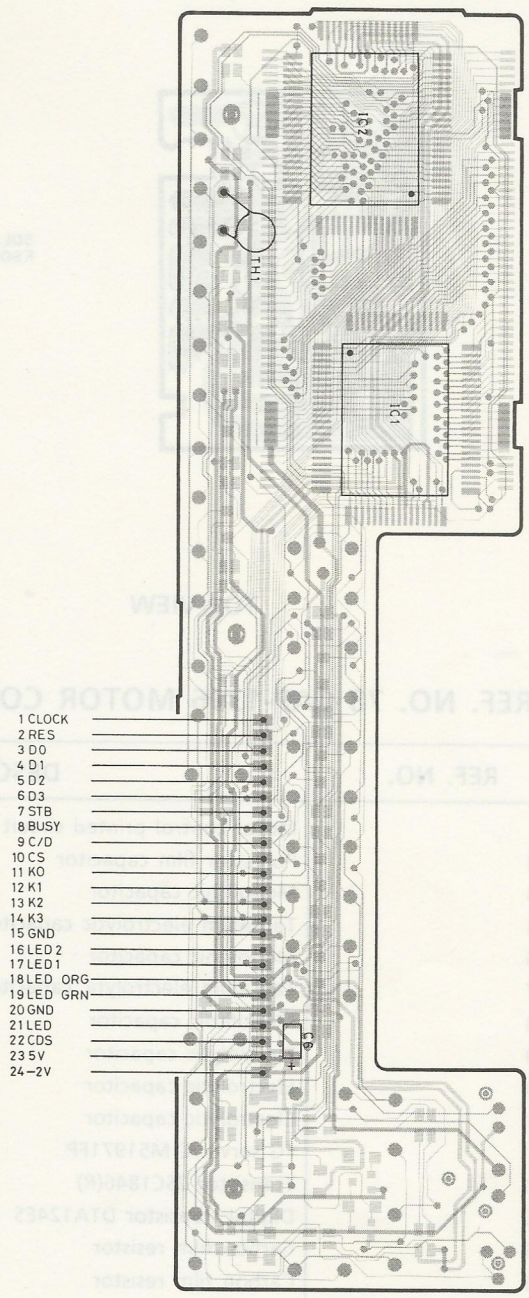

BOTTOM VIEW

REF. NO. 104 CTY-1659 LCD DISPLAY CIRCUIT BOARD ASSEMBLY PARTS LIST

REF. NO.	DESCRIPTION	PART NO.	MFR'S NO.
–	LCD display printed circuit board		440-1662-0000
C1, 2, 3, 4, 5	Chip ceramic capacitor 0.022μF 25V		263-223K-1HJB-202
C6	Chip tantalum electrolytic capacitor 4.7μF 10V		255-4R7M-1A00-005
CDS1	CdS SC05	ETX-0013	321-0013-0000
D1, 2, 3, 4, 5, 6, 7	Chip diode RLS73	ETD-RLS73	304-0073-0000
IC1, 2	LCD driver IC μPD7228AG	ETI-μPD7228AG	310-0320-0000
LCD1	LCD panel	EIX-0018	333-0018-0000
LED1	Chip LED BR1102W	ETD-BR1102W	320-0094-0000
LED2	LED BR4524K	ETD-BR4524K	320-0077-0000
LED3, 4, 5, 6, 7, 8, 9, 10, 11, 12, 13, 14, 15, 16, 17, 18, 19, 20, 21, 22	Chip LED AABG1201W	ETD-AABG1201W	320-0095-0000
LED23	Back light LED array BU1Z16	ETD-BU1Z16	320-0096-0000
Q1	Chip transistor 2SA812(M6) or equivalent	ETTA-2SA812	301-0066-1200
Q2	Chip transistor 2SC1623(L6) or equivalent	ETTC-2SC1623	302-0157-1200
R1, 2, 3, 4	Chip resistor 2.2k ohm 1/8W		202-222J-2B00-040
R6	Chip resistor 10k ohm 1/8W		202-103J-2B00-040
R8	Chip resistor 33k ohm 1/8W		200-333J-2B00-040
SW1 - SW25	Tact switch	ESS-0511	400-0511-0100
TH1	Posistor PTH59T333M	ETX-0059	326-0059-0000
VR1	Trimmer resistor 5.6k ohm	ECRV-1031	340-1031-0100

SENSOR CIRCUIT BOARD COMPONENT LOCATION GUIDE

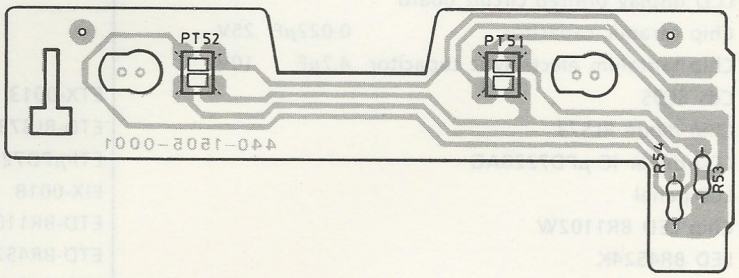

TOP VIEW

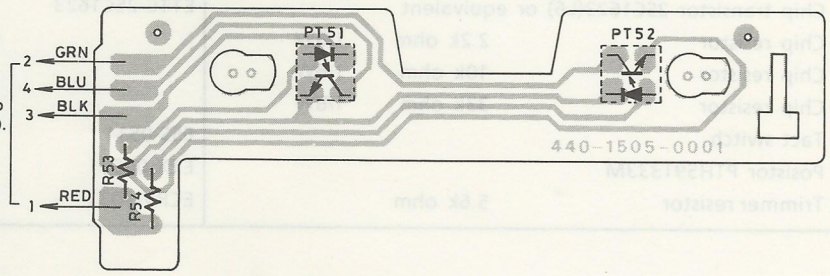

BOTTOM VIEW

REF. NO. 86 CTP-1397 SENSOR CIRCUIT BOARD ASSEMBLY PARTS LIST

REF. NO.	DESCRIPTION	PART NO.	MFR'S NO.
–	Sensor printed circuit board		440-1505-0001
PT51, 52	Photo sensor	ETX-0001	321-0001-1200
R53, 54	Carbon film resistor 1k ohm 1/6W ±5%		200-102J-2C00-010

CHOKE CIRCUIT BOARD COMPONENT LOCATION GUIDE

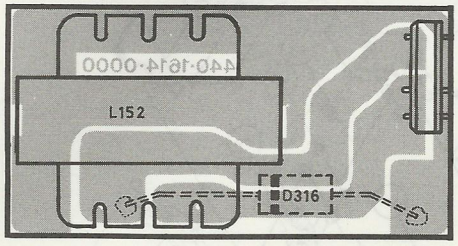

TOP VIEW

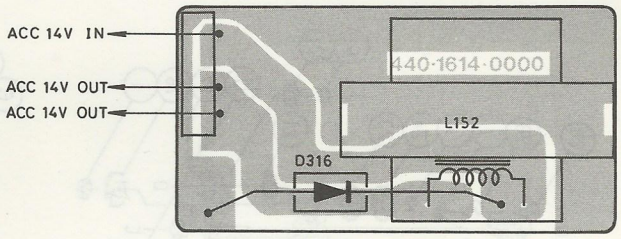

BOTTOM VIEW

REF. NO. 132 CTP-1390 CHOKE CIRCUIT BOARD ASSEMBLY PARTS LIST

REF. NO.	DESCRIPTION	PART NO.	MFR'S NO.
–	Choke printed circuit board		440-1614-0000
D316	Diode GP30B	ETD-GP30B	304-0039-0000
L152	Choke coil	ELS-0093	350-0093-1400
	3P L plug	ESP-0102	410-0102-0000

SWITCH CIRCUIT BOARD COMPONENT LOCATION GUIDE

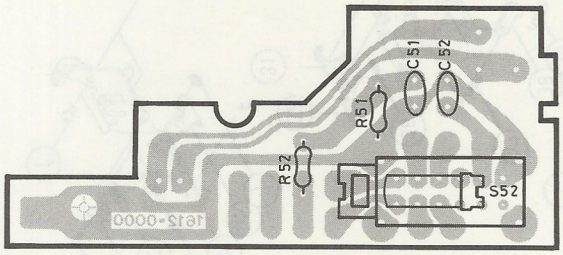

TOP VIEW

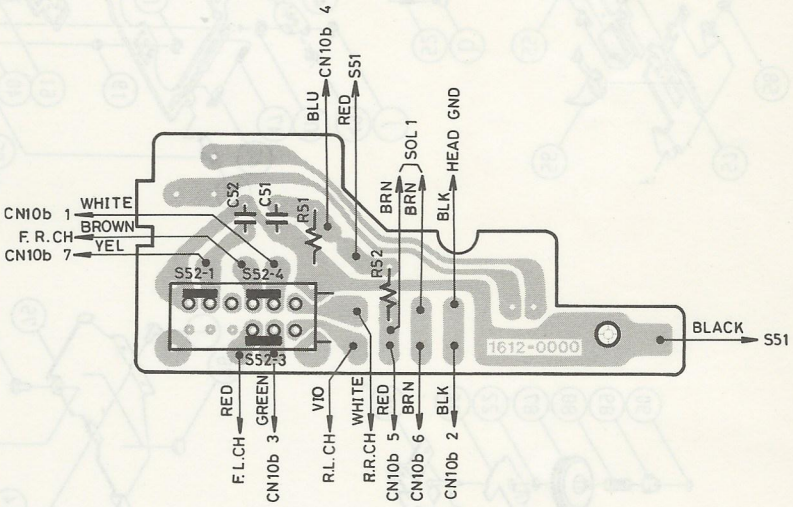

BOTTOM VIEW

REF. NO. 1 CTP-1398 SWITCH CIRCUIT BOARD ASSEMBLY PARTS LIST

REF. NO.	DESCRIPTION				PART NO.	MFR'S NO.
–	Switch printed circuit board					440-1612-0000
C51,52	Monolithic capacitor	0.022μF	25V			262-223M-1EJR-010
R51	Carbon film resistor	120k ohm	1/6W	±5%		200-124J-2C00-010
R52	Carbon film resistor	220k ohm	1/6W	±5%		200-224J-2C00-010
S52	Slide switch				ESS-0508	400-0508-0100

EXPLODED VIEW – MECHANISM

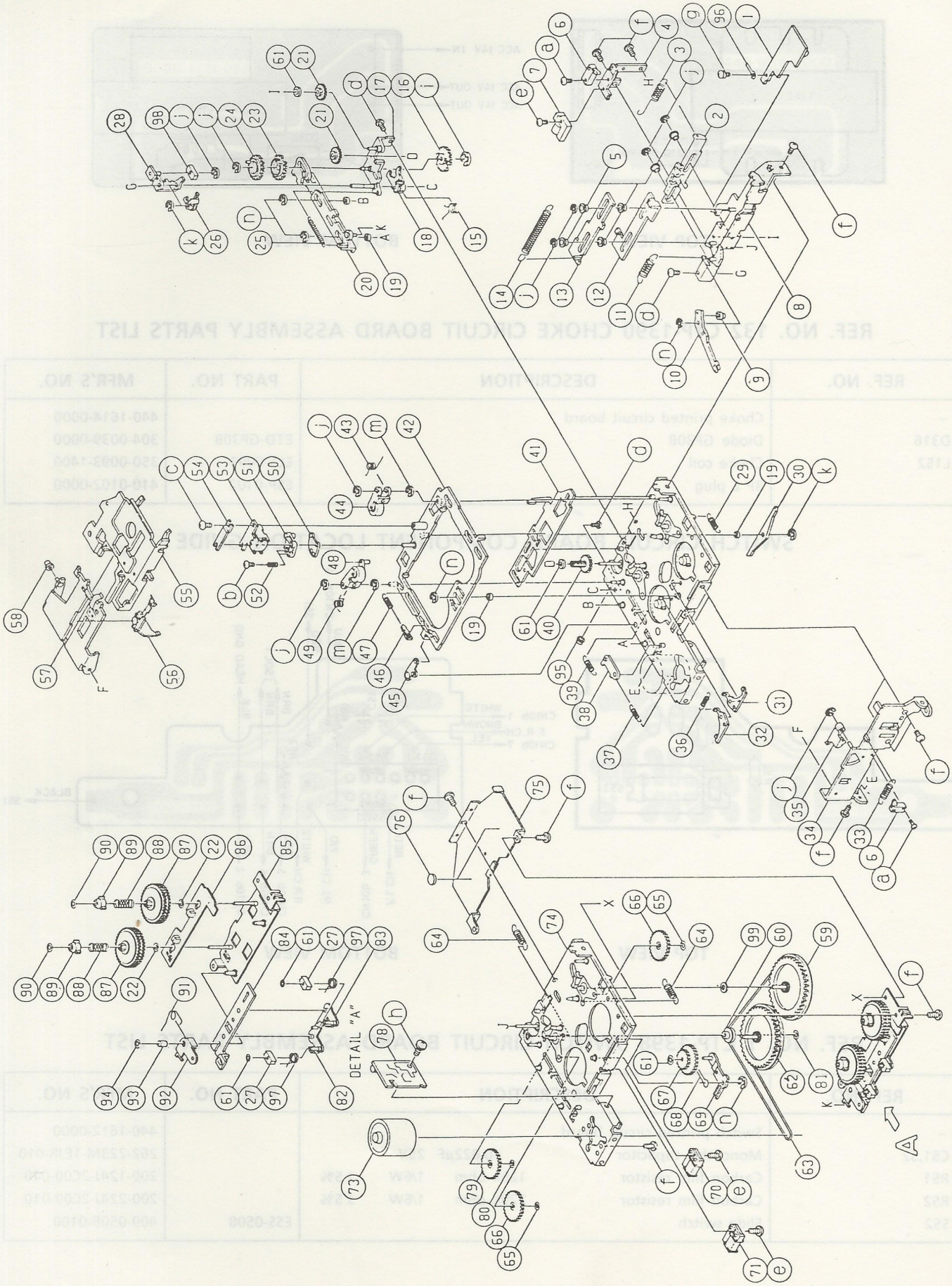

MECHANICAL PARTS LIST – MECHANISM

REF. NO.	DESCRIPTION	PART NO.	MFR'S NO.
1	Switch PC board ass'y	CTP-1398	600-1398-0000
2	Timing plate	PL-7040	100-7040-0000
3	Spring	SC-2053-3	160-2053-0003
4	Holder – Switch	PL-7092	100-7092-0000
5	Roller	CC-3037	150-3037-0000
6	Leaf switch	ESS-0259	400-0259-3000
7	Magnet (A)	ESR-0201	402-0201-3800
8	Cassette loading chassis ass'y	CMK-1222-2	610-1222-0002
9	Roller	MP-4026	131-4026-0000
10	Cassette catch arm ass'y	CMK-1221-1	610-1221-0001
11	Spring	SC-2017	160-2017-0000
12	Eject plate	PL-7038-1	100-7038-0001
13	Cassette loading plate	PL-7039	100-7039-0000
14	Spring	SC-2018	160-2018-0000
15	Tension spring	SC-2016-2	160-2016-0002
16	Reverse gear	AA-1206-2	179-1206-0002
17	Gear plate ass'y	CMK-1215-3	610-1215-0003
18	Reverse lock plate	PL-7034-2	100-7034-0002
19	Roller	CC-3022-1	150-3022-0001
20	Power plate ass'y	CMK-1217-2	610-1217-0002
21	Gear	MP-4024-1	131-4024-0001
22	Polyslider washer D2.1 × 0.25	PN-0531	101-0531-0000
23	Power gear	MP-4021-3	131-4021-0003
24	Load gear	AA-1207-4	179-1207-0004
25	Spring	SC-2003-2	160-2003-0002
26	Pallet arm	MP-4023-3	131-4023-0003
27	Magnet chip	PL-7166X1	100-7166-0100
28	Chip arm ass'y	CMK-1214-1	610-1214-0001
29	Spring	SC-2013-2	160-2013-0002
30	Pinchroller release plate	PL-7028	100-7028-0000
31	Brake arm (R)	PL-7020-1	100-7020-0001
32	Brake arm (L)	PL-7019-1	100-7019-0001
33	Spring	SC-2006-1	160-2006-0001
34	Bracket ass'y	CMK-1220	610-1220-0000
35	Cassette detector	MP-4008-1	131-4008-0001
36	Spring	SC-2004	160-2004-0000
37	Spring	SC-2002	160-2002-0000
38	Lock plate ass'y	CMK-1270-2	610-1270-0002
39	Spring	SC-2012-2	160-2012-0002
40	Source gear	MP-4025	131-4025-0000
41	Reverse plate	PL-7015-1	100-7015-0001
42	Head base plate ass'y	CMK-1219-2	610-1219-0002
43	Pinchroller (R) spring	SC-2015-2	160-2015-0002
44	Pinchroller (R) ass'y	AA-1204-1	179-1204-0001
45	Power arm ass'y	CMK-1216-1	610-1216-0001
46	Hook plate	PL-7168	100-7168-0000
47	Spring	SC-2020-3	160-2020-0003
48	Pinchroller (L) ass'y	AA-1203-1	179-1203-0001
49	Pinchroller (L) spring	SC-2014-2	160-2014-0002
50	Azimuth spacer	PL-7030-1	100-7030-0001
51	Azimuth arm	MP-4018-2	131-4018-0002
52	Spring	SC-2011	160-2011-0000
53	Autoreverse head	AHP-0305	464-0305-0000
54	Head spring plate	PL-7029	100-7029-0000
55	Cassette tray	PL-7042-3	100-7042-0003

REF. NO.	DESCRIPTION	PART NO.	MFR'S NO.
56	Cassette catcher	AA-1208-1	179-1208-0001
57	Cassette tray tilter ass'y	CMK-1218-3	610-1218-0003
58	Roller	MP-4027-1	131-4027-0001
59	Flywheel (R)	AA-0004	170-0004-0000
60	Tension pulley	MP-4006-1	131-4006-0001
61	Polyslider washer D1.2 × 0.25	PN-0530	101-0530-0000
62	Flywheel (L)	AA-0003	170-0003-0000
63	Belt	MP-4028	131-4028-0000
64	Spring	SC-2001-1	160-2001-0001
65	Polyslider washer D1.2 × 0.25	PN-0514	101-0514-0000
66	Idler gear	MP-4005-1	131-4005-0001
67	FF gear ass'y	AA-1201-1	179-1201-0001
68	Rod spring	SC-2008	160-2008-0000
69	FF arm ass'y	AA-1205-2	179-1205-0002
70	Magnet (B)	ESR-0202-1	402-0202-3801
71	Magnet (C)	ESR-0203-1	402-0203-3801
73	Motor with pulley	CMK-1278-1	610-1278-0001
74	Main chassis ass'y	CMK-1223-3	610-1223-0003
75	Holder – Flywheel	PL-7026-1	100-7026-0001
76	Spacer – Flywheel	PN-1001	101-1001-0000
78	Motor control PC board ass'y	CAP-1396	600-1396-0000
79	Gear D16	MP-4007	131-4007-0000
80	Polyslider washer D2.1 × 0.25	PN-0639	101-0639-0000
81	Polyslider washer D0.8 × 0.25	PN-1044	101-1044-0000
82	Chip arm (R) ass'y	CMK-1209-3	610-1209-0003
83	Chip arm (L) ass'y	CMK-1210-3	610-1210-0003
84	Chip actuator	PL-7022-1	100-7022-0001
85	Take-up reel chassis ass'y	CMK-1213-2	610-1213-0002
86	Sensor PC board ass'y	CTP-1397	600-1397-0000
87	Reel table ass'y	AA-1202-2	179-1202-0002
88	Spring	SC-2010	160-2010-0000
89	Take-up reel hub	MP-4017	131-4017-0000
90	Polyslider washer D1.6 × 0.5	PN-1005	101-1005-0000
91	Tension spring	SC-2005	160-2005-0000
92	L crank	PL-7025	100-7025-0000
93	Sleeve	CC-3066	150-3066-0000
94	Polyslider washer D1.6 × 0.25	PN-1023	101-1023-0000
95	Roller	CC-3076	150-3076-0000
96	Cord clamp	PP-0432	100-6432-0000
97	Tension spring	SC-2059-1	160-2059-0001
98	Magnet chip	PL-7166	100-7166-0000
99	Teflon washer D2.1 × 0.15	PN-1055	101-1055-0000
a	Pan head screw 1.7 × 6 (Precision)	006176	000-0170-0600-121
b	Pan head screw 1.7 × 8	006178	009-0005-0000
c	Pan head screw 2 × 3 (Precision)	006203	000-0200-0300-121
d	Pan head screw 2 × 3	006203	000-0200-0300-021
e	Pan head screw 2 × 5.5	006255	000-0200-0550-021
f	Pan head screw 2.6 × 3	006263	000-0260-0300-021
g	SEMS screw 2.6 × 5	093265	050-0260-0500-121
h	SEMS screw 2.6 × 8	093268	050-0260-0800-121
i	E-ring D1.2 × 0.3	030123	080-0120-0000
j	E-ring D1.5 × 0.4	030154	080-0150-0000
k	E-ring D2.0 × 0.4	030204	080-0200-0000
m	E-ring D3.0 × 0.6	030306	080-0300-0000
n	Special E-ring D1.9 × 0.4	030194	089-0002-0000

EXPLODED VIEW – CABINET

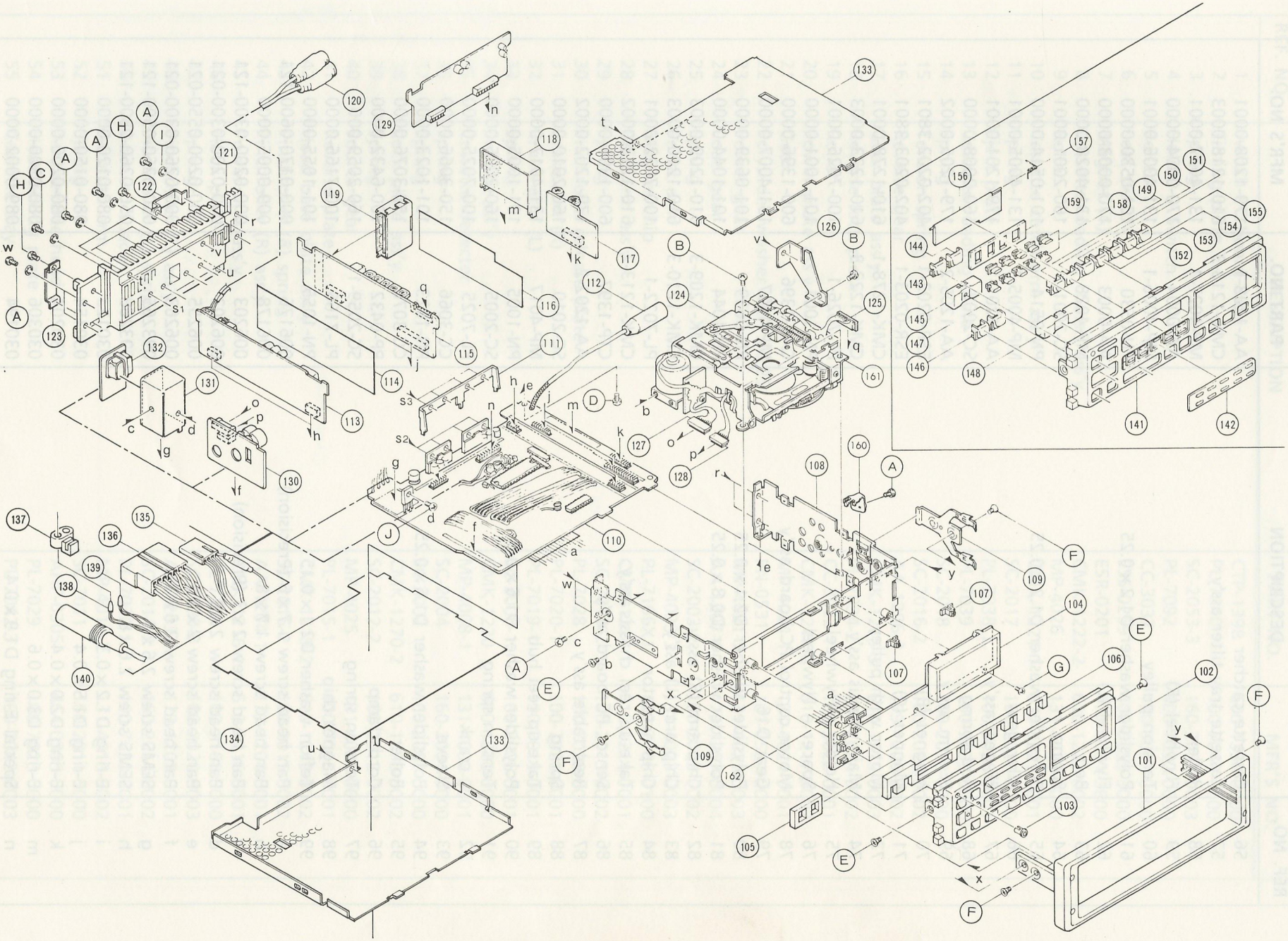

MECHANICAL PARTS LIST – CABINET

REF. NO.	DESCRIPTION	PART NO.	MFR'S NO.
101	Trimplate	MP-4257	131-4257-0000
102	Escutcheon ass'y	CMM-0479-1	613-0479-0001
103	Rubber cap	MP-4268	131-4268-0000
104	LCD display PC board ass'y	CTY-1659	603-1659-0000
105	Cushion	PN-1088	101-1088-0000
106	Cushion	PN-1089	101-1089-0000
107	Spacer	MP-4164-1	131-4164-0001
108	Side panel ass'y	CMK-1388-1	610-1388-0001
109	Spring – Snap-in	PL-7281-2	100-7281-0002
110	Main PC board ass'y	CTP-1388-1	600-1388-0001
111	Holder – IC	PL-7292	100-7292-0000
112	Aerial socket with cable	AH-0294	428-0294-0000
113	NR PC board ass'y	CAP-1465	600-1465-0000
114	Insulation paper	PN-1085	101-1085-0000
115	FM PC board ass'y	CRP-1391-1	600-1391-0001
116	Insulation paper	PN-1086	101-1086-0000
117	AM stereo PC board ass'y	CRP-1394	600-1394-0000
118	AM tuner	AR-0203	625-0203-0000
119	FM tuner	AR-0202	625-0202-0000
120	RCA jack ass'y	AH-0185	421-0185-0000
121	Heatsink plate	MM-0214	130-0214-0000
122	Cord holder	PL-7180-1	100-7180-0001
123	Cord holder	PL-7293	100-7293-0000
124	Cassette mechanism	H-03CD	626-0003-3400
125	7-pin socket with wires	AH-0188	421-0188-0000
126	Holder	PL-7290	100-7290-0000
127	6-pin socket with wires	AH-0187	421-0187-0000
128	4-pin socket with wires	AH-0186	421-0186-0000
129	Graphic equalizer PC board ass'y	CAP-1395	600-1395-0000
130	Relay PC board ass'y	CTP-1466	600-1466-0000
131	Case – Shield	PL-7289	100-7289-0000
132	Choke PC board ass'y	CTP-1390	600-1390-0000
133	Lid	PL-7288-2	100-7288-0002
134	Insulation paper	PN-1084-1	101-1084-0001
135	4-pin plug with wires	AH-0213	421-0213-0000
136	13-pin plug with wires	AH-0182	421-0182-0000
137	Holder – Lamp	MP-4267	131-4267-0000
138	Lamp	EIL-0214	430-0214-0000
139	Lamp	EIL-0215	430-0215-0000
140	7-pin DIN socket with wires	WD-0001	420-0001-0000
141	Escutcheon CMM.0480	MP-4256-~~1~~	131-4256-0001
142	Front panel	MP-4264	131-4264-0000
143	Button (A)	MP-4258-3	131-4258-0003
144	Button (B)	MP-4258X1-3	131-4258-0103
145	Button (C)	CMM-0481-1	613-0481-0001
146	Button (D)	MP-4259-3	131-4259-0003
147	Button (E)	MP-4259X1-3	131-4259-0103
148	Button (F)	MP-4262-4	131-4262-0004
149	Button (G)	MP-4259X2-3	131-4259-0203
150	Button (H)	MP-4259X3-3	131-4259-0303

$15.91 $22.90
$10.92 13.00

23.00
13.00
36.00

CMM0480

REF. NO.	DESCRIPTION	PART NO.	MFR'S NO.
151	Button (I)	MP-4259X4-3	131-4259-0403
152	Button (J)	MP-4259X5-3	131-4259-0503
153	Button (K)	MP-4259X6-3	131-4259-0603
154	Button (L)	MP-4259X7-3	131-4259-0703
155	Button (M)	MP-4259X8-3	131-4259-0803
156	Cassette door	MP-4254X2	131-4254-0200
157	Spring – Cassette door	SC-2068	160-2068-0000
158	Button (N)	MP-4260-1	131-4260-0001
159	Cushion	PN-1087	101-1087-0000
160	Holder – PCB	PL-7291	100-7291-0000
161	Holder	PL-7160-1	100-7160-0001
162	Flat cable	WX-0239	471-0239-0000
A	Pan head screw 2.6×5 (Self tight)	006265ST	020-0260-0500-121
B	Pan head screw 2.6×3	006263	000-0260-0300-021
C	Pan head screw 2.6×8	006268	000-0260-0800-021
D	SEMS pan head screw 2.6×5	093265	050-0260-0500-121
E	Flush head screw 2.6×5	002265	001-0260-0500-021
F	Flush head screw 3×6	002306	001-0300-0600-021
G	SEMS pan head screw 2×4	093204	050-0200-0400-121
H	Pan head tapping screw 3×5	086305	010-0300-0500-221
I	Inner toothed washer D2.6	0142632	071-0260-0000
J	Pan head screw 2.6×6	006266	000-0260-0600-021

ACCESSORY LIST

DESCRIPTION	Q'TY	PART NO.	MFR'S NO.
Screw kit	1	AS-0211	633-0211-0000
Contains;			
Bolt	1	CS-0525	150-2525-0000
Hexagon nut D5	2	020540	060-0500-0101
Plain washer D5	2	010508	070-0500-0100
Rear suspension plug	1	MR-0203	131-3203-0000
SEMS hexagon screw 5 x 16	1	0945016	055-0500-1600-121
Spring washer D5	2	0115210	072-0500-0200
Spacer set	1	CMT-0052	630-0052-0000
Flush head screw 5 x 8	4	002508	001-0500-0800-021
Pan head screw 3 x 6	2	006306	001-0300-0600-021
Spacer	2	MP-4266	131-4266-0000
CD mount frame	1	AA-1221	179-1221-0000
CD mount spacer	2	HPN-1539	181-1539-0000
Dismounting bracket	2	PL-2898-1	100-2898-0001
Supporting strap	1	PP-0159	100-6159-0000
13P socket with wires	1	CTT-0065	631-0065-0000
Hand book	1	HPB-1096	801-1096-0000
Dealer list	1	HPC-0209-2	803-0209-0002
Warranty card	1	HPC-0517	803-0517-0000

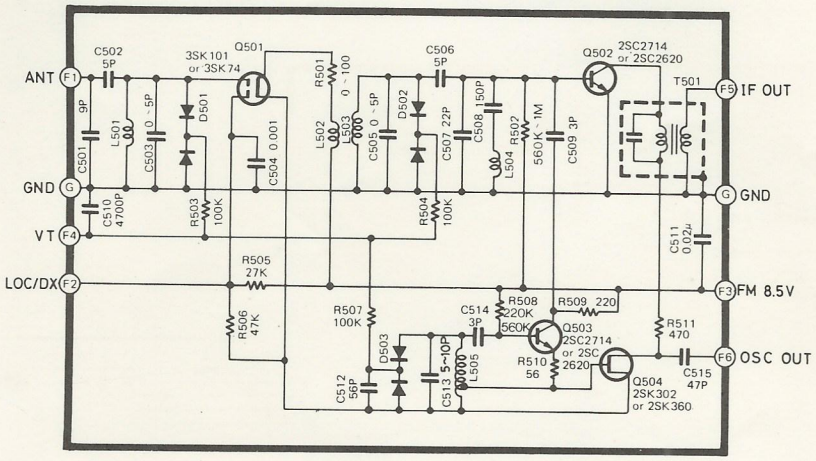
ANT
GND
VT
LOC/DX
IF OUT
GND
FM 8.5V
OSC OUT
Q501
3SK101 or 3SK74
Q502
2SC2714 or 2SC2620
T501
Q503
2SC2714 or 2SC 2620
Q504
2SK302 or 2SK360

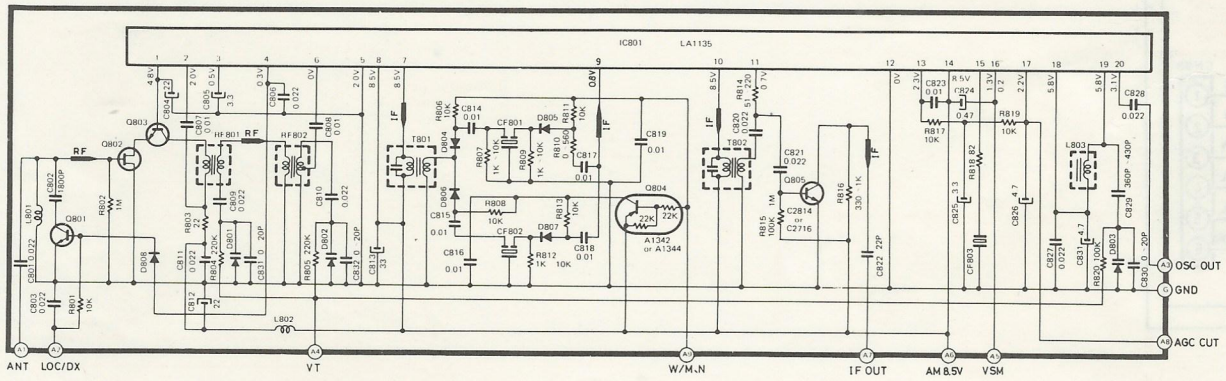
IC801 LA1135
OSC OUT
GND
AGC CUT
ANT
LOC/DX
VT
W/M.N
IF OUT
AM 8.5V
VSM

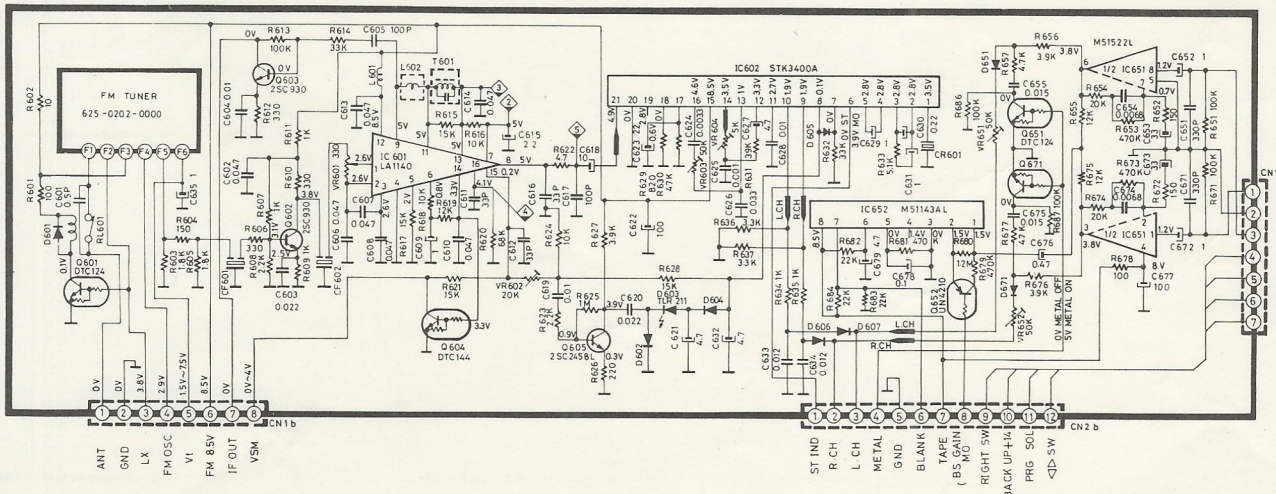
FM TUNER
625-0202-0000
IC601 LA1140
IC602 STK3400A
IC652 M51143AL
M51522L
CN10a
R.CH IN
GND
L.CH IN
RIGHT SW
BACK UP +14V
PRG SOL
◁▷ SW
CN1b
ANT
GND
LX
FM OSC
Vt
FM 8.5V
IF OUT
VSM
CN2b
ST IND
R CH
L CH
METAL
GND
BLANK
TAPE
RIGHT SW
BACK UP+14
PRG SOL
◁▷ SW

SCHEMATIC DIAGRAM

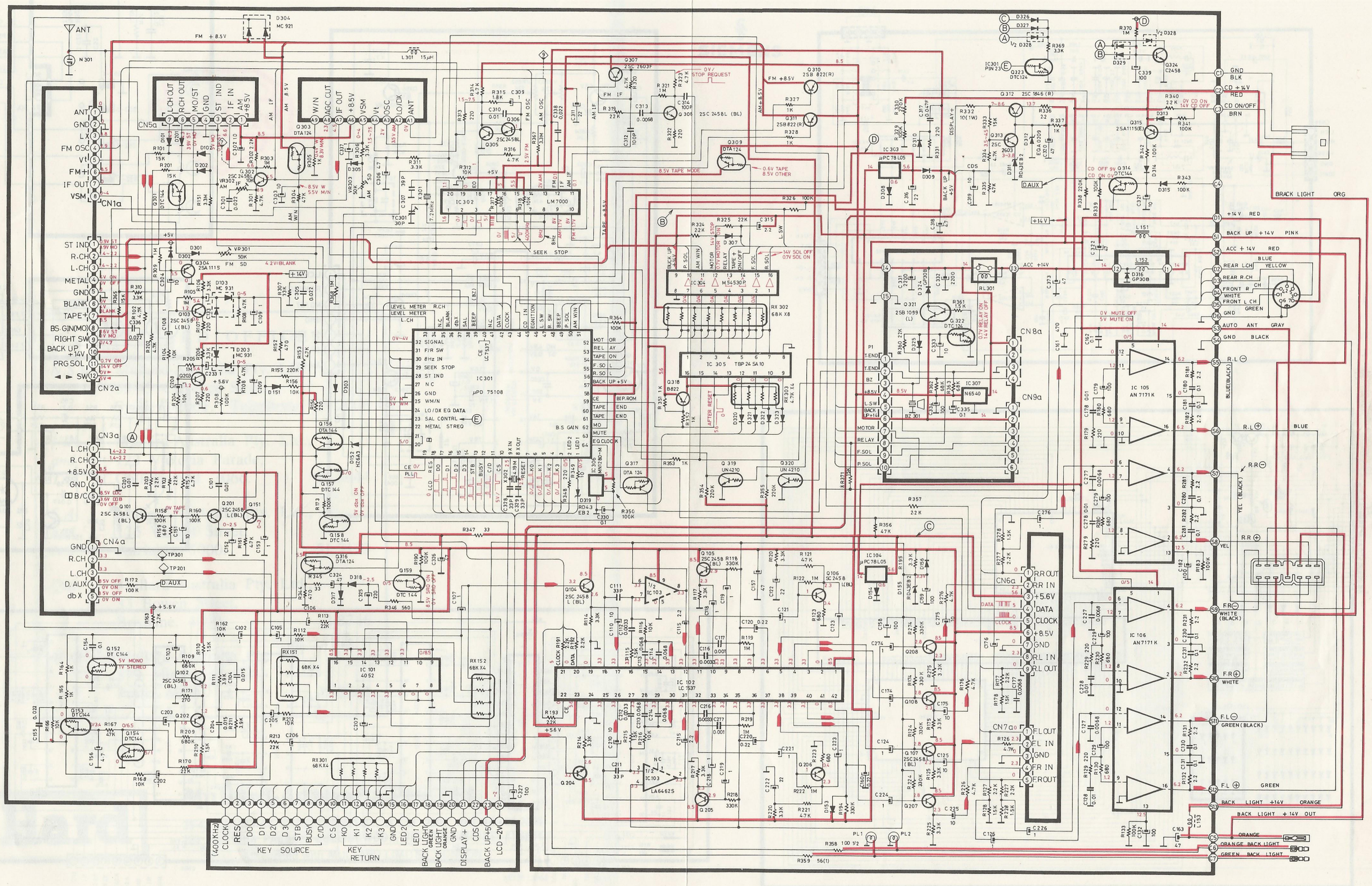

SCHEMATIC DIAGRAM

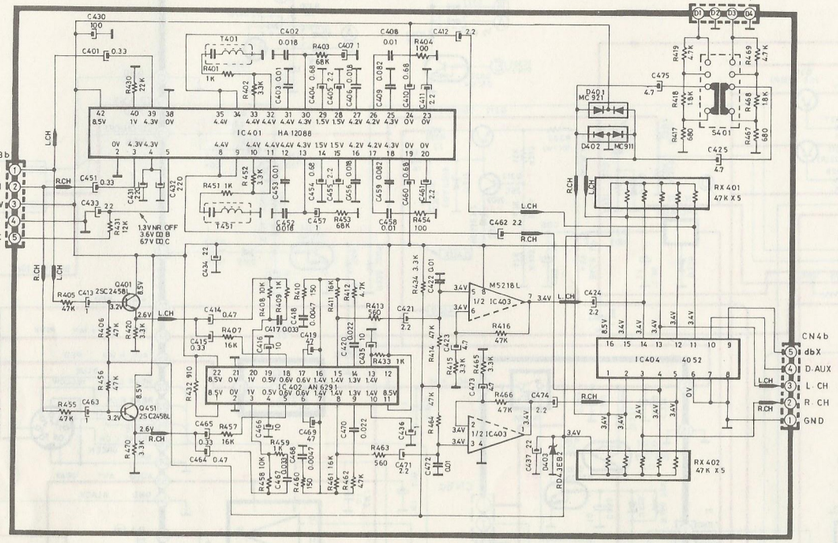

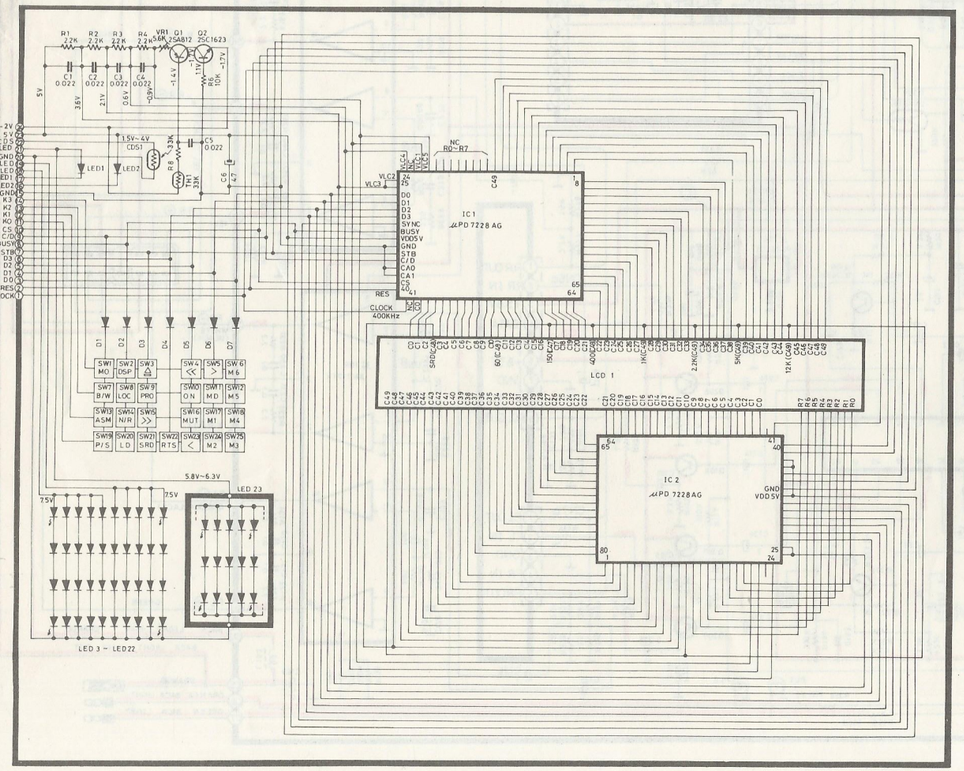

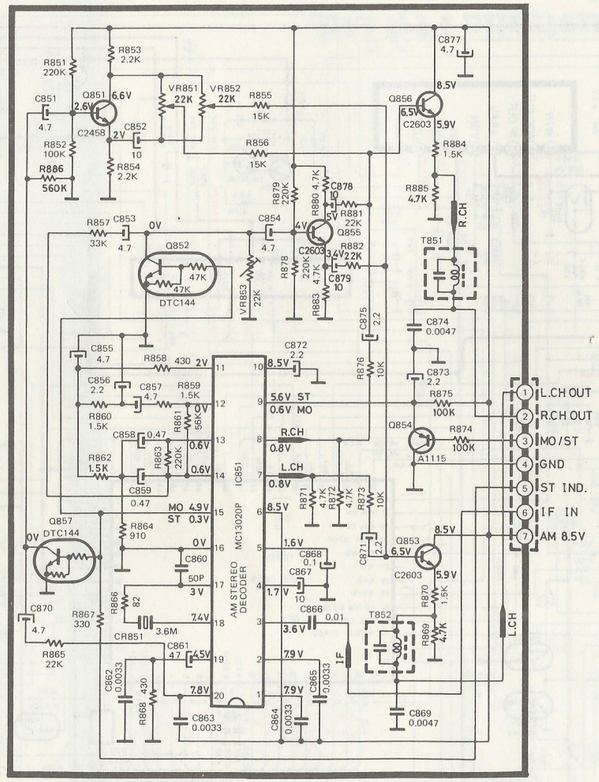

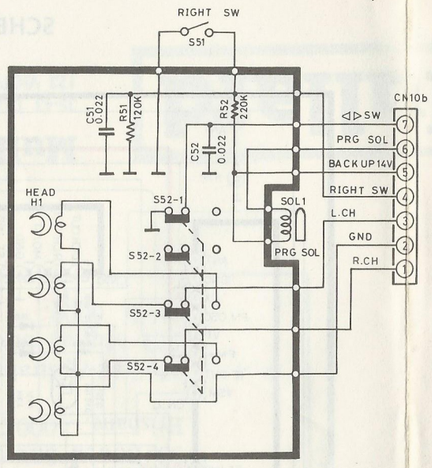

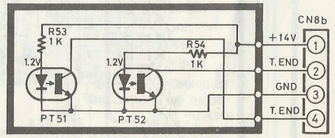

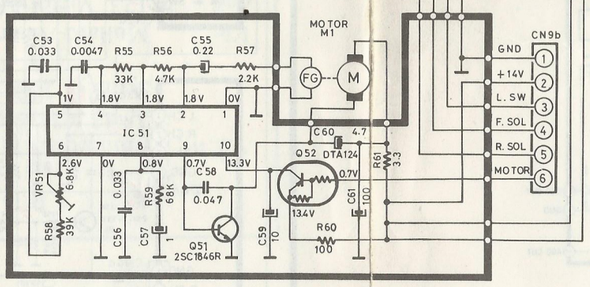

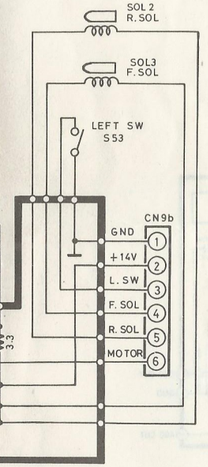

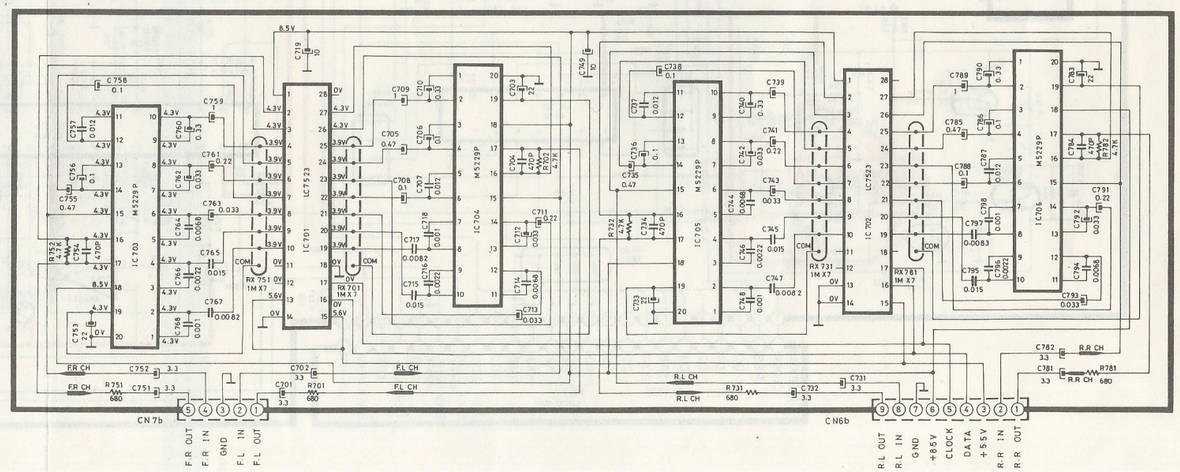

CMK 1278-1

28C 1846

DISPLAY CUTTING ON/OFF – CHECK Q312. FOR DS J.

Pin 30 MUST HAVE. 2V PLUSED FOR UNIT TO WORK (IN OFF MODE)

intermittent turn on/off! check for 8V out of Relay PCB..

TURNS ON BUT NO DISPLAY – CHECK TRIMMER ON L.H. SIDE (BEHIND RUBBER STOPPER)
ADJUST. CLOCK WISE FOR BEST/MAX GAIN!