TOSHIBA

STEREO CASSETTE PLAYER

KT-4177/C771

SPECIFICATIONS

Track sytem:	Stereophonic
Recommended tape:	Normal ferric, chrome dioxide, and metal alloy: C-30 to C-90 (Recorded tape)
Tape speed:	4.8 cm/sec.
Frequency response:	Reproduction: 50 Hz to 14 kHz (normal), 50 Hz to 16 kHz (CrO_2/metal)
Output terminal:	3.5 mm dia. stereo headphones jack x 1 (also serves as a remote control jack)
Maximum output power:	Integration 16mW (8mW + 8mW)
Power supply:	1.5V DC IEC R6 ("AA" cell x 1) External power source supplied to the [DC IN 1.5V] jack (3.4mm dia. center contact negative)
Dimensions:	70.3(W) x 119(H) x 21.5(D) mm
Weight:	175g (without batteries)

Specifications are subject to change without notice.

K-TE, AY, VF, W-TE, VF

PRINTED IN JAPAN 22905737 July, 1987 Ⓢ

OPERATING CONTROLS

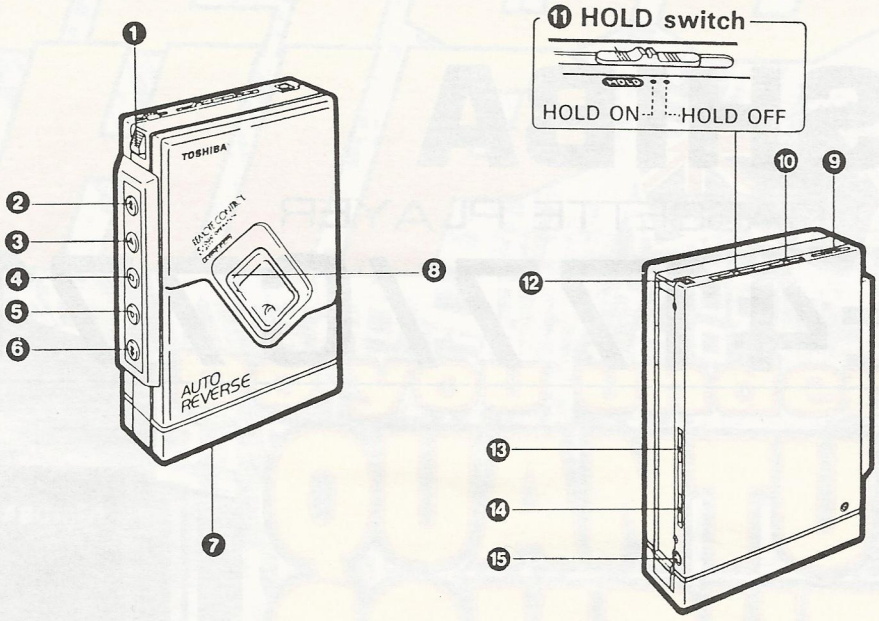

❶ [OPEN] knob
❷ [⏩] button
❸ [▶] button
❹ [■] button
❺ [◀] button
❻ [⏪] button
❼ Battery case
❽ [OPERATION] indicator
❾ [VOLUME] control
❿ [DOLBY* NR] switch
⓫ HOLD switch
⓬ [PHONES] jack (also serves as a remote control jack)
⓭ [TAPE] switch
⓮ [AUTO REVERSE] switch
⓯ [DC IN 1.5V] jack

* Dolby noise reduction manufactured under license from Dolby Laboratories Licensing Corporation. "DOLBY" and the double-D symbol DD are trademarks of Dolby Laboratories Licensing Corporation.

Name Label

KT-4177

KT-C771

Notes on Logic Control Operations

■ Logic Control System

It is a system which electrically controls the tape movement by sending electrical signals when the control button is pressed. Stopping and rewinding the tape are done just by lightly pressing a control button.

- The tape movement will stop if the battery case is removed or the AC adaptor plug is unplugged during playback. In this case, press the [◀] button ❺ and, after at least 2 seconds, press the [▶] button ❸. If any other button is pressed, fast forwarding and stopping could repeat continuously. In this case, press the [■] button ❹ until the tape movement stops. Then press [◀] button ❺ and, after at least 2 seconds, press the [▶] button ❸.
- If the battery becomes run down during playback, tape movement becomes unstable or the [OPERATION] indicator ❽ will go off and the sound will cease. If tape playback is continued after the [OPERATION] indicator ❽ goes off, the cassette lid becomes unopenable. In this case, replace the battery with a new one, or by using the AC adaptor, press [■] button ❹ to open the cassette lid and remove the cassette tape.
- If the plug is removed from the [PHONES] jack ⓬ when the HOLD switch ⓫ is set to " HOLD ", the movement will stop automatically.
- The set's control buttons are will not operate when the HOLD switch ⓫ is set to " HOLD ". In this case, playback and stop controls are possible only with the remote controller.
- The tape movement may change when the remote controller or the headphone is plugged in or unplugged from the set. This, however, is not a malfunction. Set the HOLD switch ⓫ to "HOLD OFF" position and press the [■] button ❹.
- The cassette lid is designed remain shut during tape playback: Do not forcefully open the cassette lid.

"HOLD" Operation

- By setting the HOLD switch ⓫ to " HOLD ", the present operating condition can be maintained (HOLD). In this mode, pressing [◀]❺, [▶]❸, [⏩]❷, [⏪]❻, or [■] ❹ button has no effect on the tape movement.
- When carrying the set in a bag, by unplugging the remote control plug from the [PHONES] jack ⓬ and setting the switch to " HOLD ", you can prevent power from entering the unit when a control button is accidentally pressed.
- By setting the switch to the " HOLD " position during playback, you can prevent the tape movement from changing to another movement when a control button is accidentally pressed. To stop the tape movement, either press the stop button on the remote controller or set the HOLD switch ⓫ to "HOLD OFF" and press the [■] button ❹.

DISASSEMBLY INSTRUCTIONS

MAIN P.C. BOARD REMOVAL

1. Remove battery case.
2. Remove two screws Ⓐ .
3. Remove two screws Ⓑ .
4. Remove one screw Ⓒ .
5. Remove two screws Ⓓ .
6. Remove two screws Ⓔ , and two decoration boards and button assembly will be removed.
   Note: When removing button assembly, take care not to miss springs Ⓘ and Ⓙ .
7. Remove one screw Ⓕ .
8. Remove one screw Ⓖ , one screw Ⓛ , one screw Ⓗ , and Ⓚ from Main P.C. Board, and then main P.C. Board will be removed.

FRONT CABINET REMOVAL

1. Remove two decoration boards and button assembly.
2. Pull out hinge shaft (306), and the front cabinet will be removed.

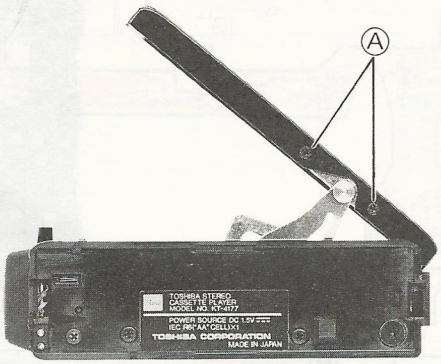

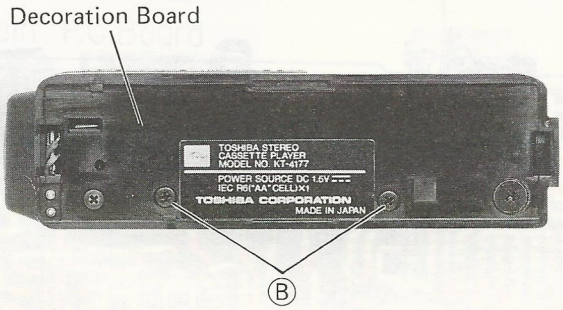

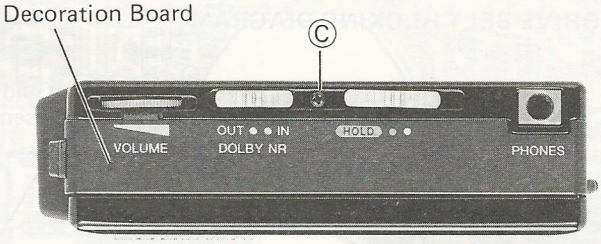

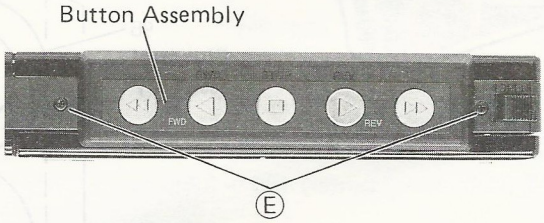

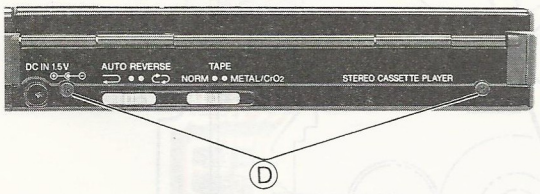

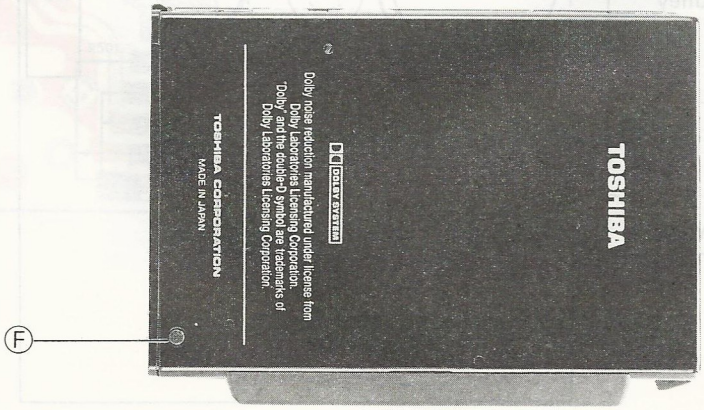

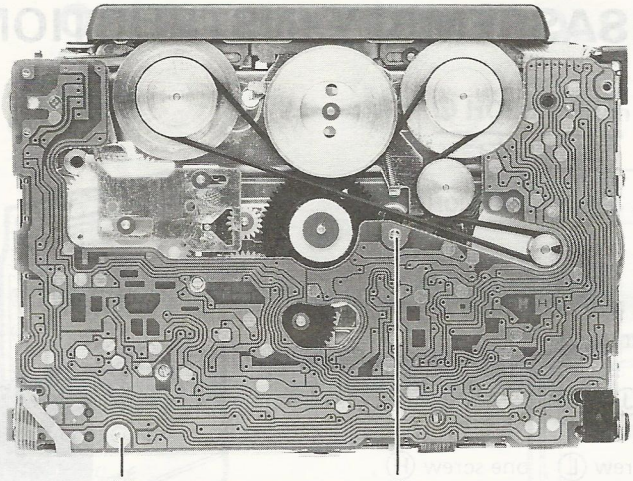

Figure 8

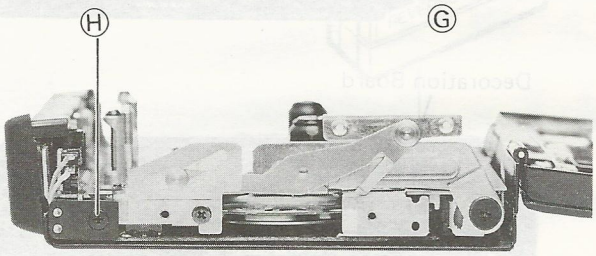

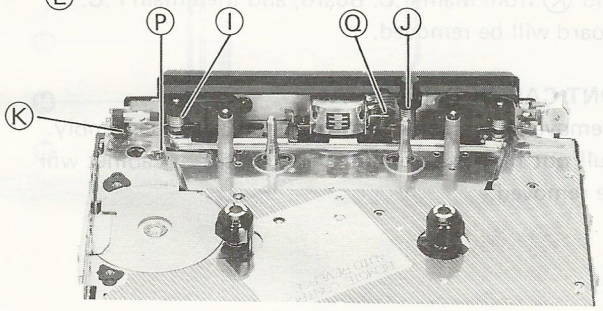

DRIVE BELT HOOKING DIAGRAM

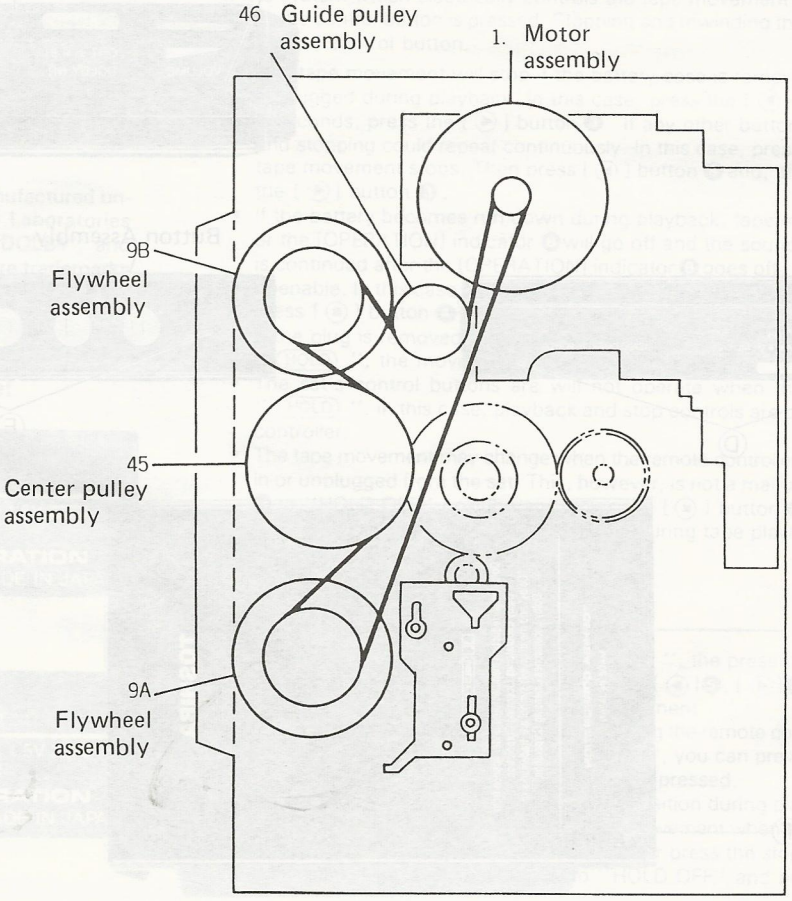

CAUTIONS ON SERVICING

1. Four flexible P.C. Boards are used for KT-4177/C771. So take care not to cut them when servicing.
   (1) When removing screw securing cassette up lever and front cabinet, do not open front cabinet by more than 120° from the position at which front cabinet is closed.
   (One flat cable mounted on hinge side may be damaged.)
   (2) The same caution is also true when opening or closing the front cover attached on the front side. Do not open the front cover (removed) up to 120°.
   (Flat cable will be extended and broken at its soldering part.)
   When flat cable is loosened with mechanism, Main P.C. Board, etc. removed from cabinet back, front cabinet can be opened within free area.
   (3) When removing Main P.C. Board from mechanism, no bracket is used to fix key switches, so care will be given to the switches when opening or closing Main P.C. Board.
   Gently open or close the Main P.C. Board as the flat cable between mechanism and Main P.C. Board is apt to be broken.
   (4) When replacing LED P.C. Board, replace front cabinet assembly. (for front cabinet is attached to front cover)

ADJUSTMENTS

AZIMUTH ADJUSTMENT

1. Load test tape ATT-114 and push REV key.
2. Adjust adjustment hole (M) with minus driver until headphone output obtains max.
3. Push FWD key. Adjust adjustment hole (N) with plus driver until headphone output obtains max.
4. Push REV key again and check that headphone output obtains max.
   If the output is not max, repeat steps 2 and 3.
5. Apply lock tite to (P) and (Q).

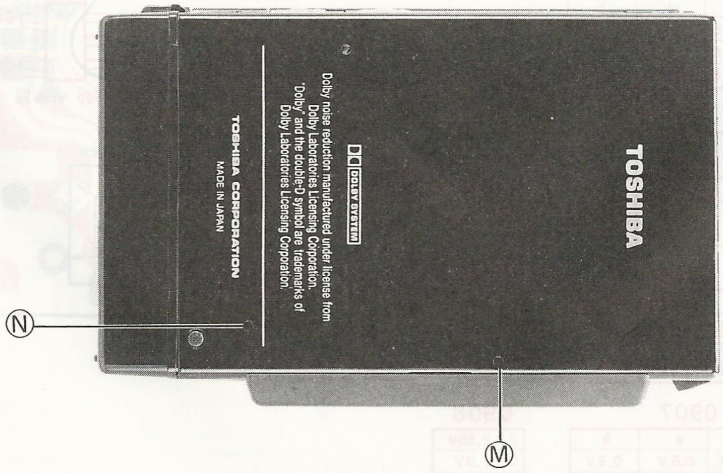

MOTOR SPEED ADJUSTMENT

1. Connect headphone jack to frequency counter. (Set power supply voltage to 1.2V.)
2. Load test tape ATT-111, 3 kHz.
3. Adjust adjustment hole Ⓞ (R911) with minus driver until frequency counter indicates 3000 ±30 Hz.

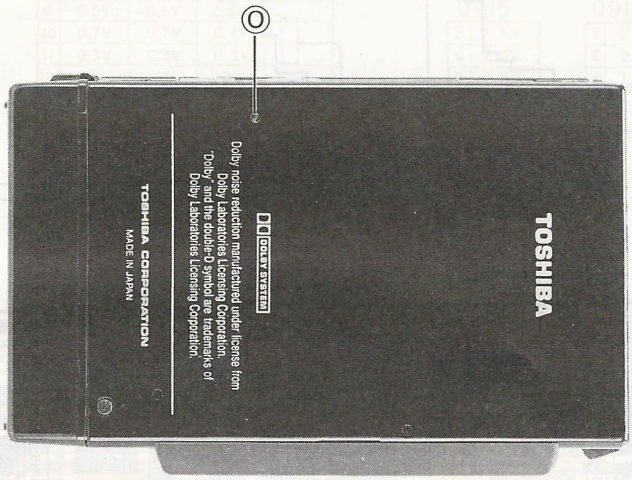

DOLBY ADJUSTMENT

Adjust R317 and R318 until 100mV is obtained across test points TP1 and TP2 with test tape ATT-150 loaded.

TORGUE

PLAY/REC	28g · cm
FF	40g · cm or more
REW	40g · cm or more

CURRENT CONSUMPTION

TAPE (C60 rewind center) 180 ∿ 220mA

ELECTRICAL PARTS LOCATIONS

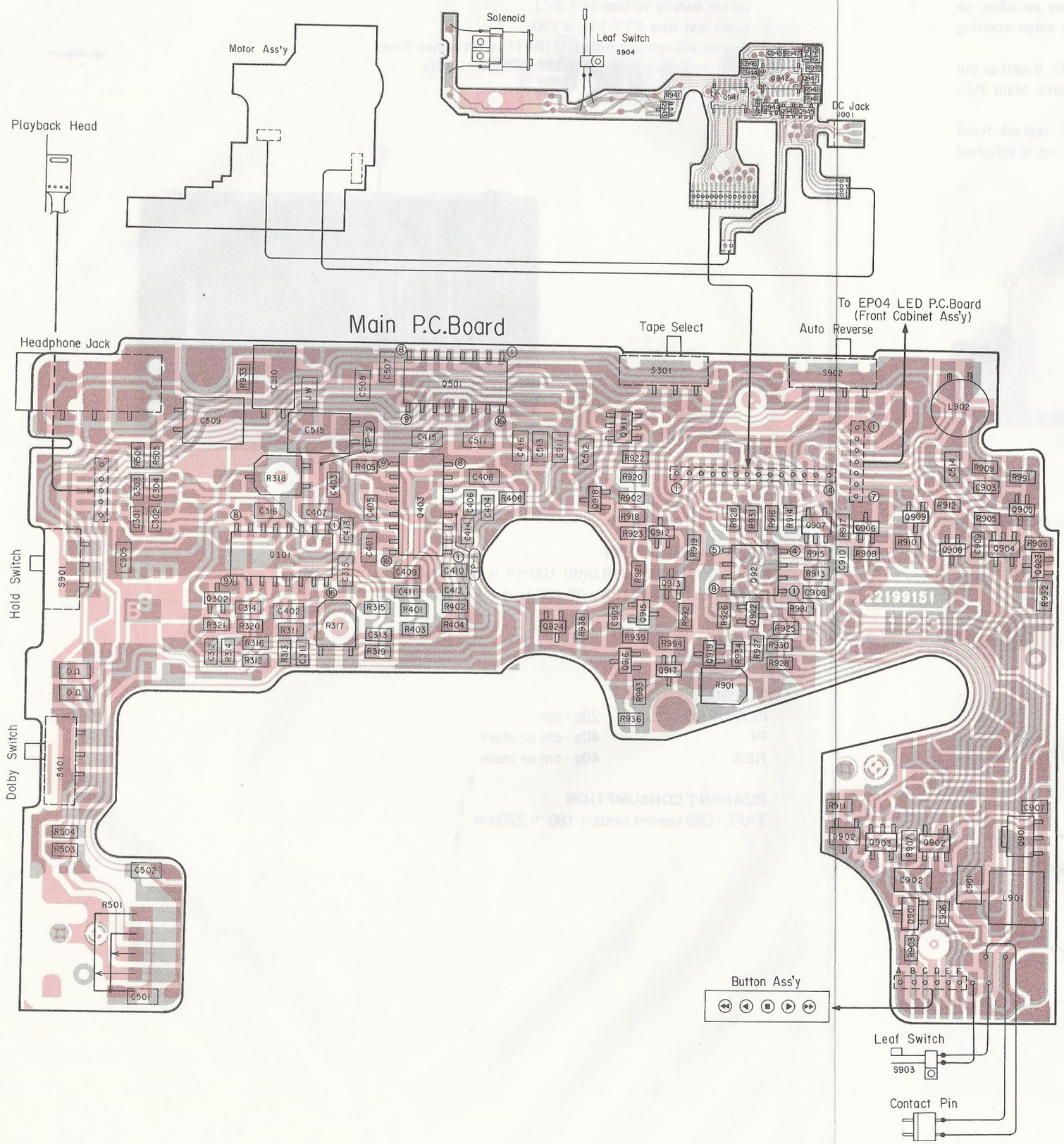

Q301

	Tape Fwd	Tape Rev	Tape ≫,≪	S301 Metal
1	0.7V	0.7V	0.7V	0.7V
2	0.7V	0.7V	0.7V	0.7V
3	1.2V	1.2V	1.2V	1.2V
4	0.7V	0.7V	0.7V	0.7V
5	0V	0V	0V	
6	0.7V	0.7V	0.7V	
7	0.7V	0.7V	0.7V	
8	0.5V	0.5V	0.5V	
9	0.5V	0.5V	0.5V	
10	0.7V	0.7V	0.7V	
11	0.3V	0.3V	0.3V	
12	0V	0V	0V	
13	0V	0V	0V	1.2V
14	0V	0V	0V	
15	0.3V	0.3V	0.3V	
16	0.7V	0.7V	0.7V	

Q302

	Tape Fwd	Tape Rev
E	0V	0V
C	0V	0.5V
B	0.6V	0.6V

Q403

	S401 OFF	S401 ON
1	0.7V	0V
2	0.1V	
3	0.1V	
4	1.15V	
5	1.15V	
6	1.15V	1.16V
7	1.13V	1.14V
8	0V	
9	1.15V	1.17V
10	1.13V	1.14V
11	1.15V	1.16V
12	1.15V	
13	1.15V	
14	0.1V	
15	0.1V	
16	2.35V	

※ Tape (FWD, REV≫, ≪)

Q901

E	0V
C	1.5V
B	0.7V

Q903

	a	b
E	2.5V	2.5V
C	2.4V	2.4V
B	1.5V	0.1V

Q904

	S901 Hold a	S901 Hold b	S901 Tape a	S901 Tape b
E	0.7V	0.7V	0V	0V
C	0.7V	0V	0V	0V
B	1.2V	0.5V	0.5V	0V

Q905

	Tape	Hold
E	0V	0V
C	0V	0.7V
B	0.6V	—

Q907

	a	b
E	0.6V	0.6V
C	2.3V	1.7V
B	1.0V	1.15V

Q401,402

	Others	S901 Radio
E	1.1V	0V
C	1.1V	0V
B	0.5V	0V

Q501

	FWD	REV ≫,≪
1	0V	
2	0.6V	
3	0.7V	
4	0.7V	
5	0.7V	
6	0.1V	
7	0.7V	
8	0V	
9	1.5V	
10	0.7V	
11	0.1V	
12	0.7V	
13	1.2V	
14	0.1V	
15	0.1V	
16	0.5V	1.4V

Q902

	−a	−b
E	0V	0V
C	0.1V	0.7V
B	0.6V	0.6V

Q906

E	2.35V
C	2.3V
B	1.7V

Q908

E	2.55V
C	1.9V
B	2.0V

Q909

E	2.5V
C	1.8V
B	1.9V

Q911

	a	b
E	1.5V	1.5V
C	1.15V	0V
B	0.8V	1.3V

Q912

E	1.15V
C	0.5V
B	0.5V

Q913

E	0V
C	0V
B	0.7V

Q942

1	0V
2	1.2V
3	2.4V
4	0.1V
5	0.1V
6	0.1V
7	⎍
8	※
9	0V
10	※
11	※
12	※
13	※
14	※
15	1.9V
16	2.4V

⎍ :

※ :

Q915

E	1.3V
C	2.0V
B	1.8V

Q916

E	2.5V
C	2.4V
B	1.8V

Q917

E	0V
C	0.1V
B	0.6V

Q918

E	0.5V
C	0V
B	0V

Q919

E	0V
C	0.1V
B	0.6V

Q921

	Tape Play	Tape Stop
1	0V	1.1V
2	2.5V	1.4V
3	0.9V	
4	0.9V	
5	0.9V	
6	1.2V	
7	1.2V	
8	2.5V	1.4V

Q943

E	0V
C	2.4V
B	0V

Q944

	a	b
E	0V	0V
C	0V	⎍
B	0.6V	0.6V

⎍ :

Q922

E	1.2V
C	1.6V
B	1.6V

Q945

	a	b
E	0.8V	0.8V
C	0.6V	0.6V
B	0.15V	0.15V

Q923

E	0V
C	0V
B	0.5V

Q924

	Power Supply Voltage 1.5V	Power Supply Voltage 1.0V
E	2.35V	≦ 0.1V
C	—	—
B	2.0V	≦ 0.6V

Q946

	a	b
E	0V	0V
C	0.6V	0.6V
B	0.6V	0.6V

Q941

1	2.4V
2	2.4V
3	2.4V
4	2.4V
5	2.4V
6	0.1V
7	0V
8	0.1V
9	2.4V
10	2.4V
11	2.4V
12	0.1V
13	2.4V
14	2.4V

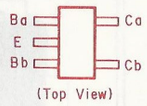

B : Base (a, b)
E : Emitter (Common)
C : Collector (a, b)

SCHEMATIC DIAGRAM

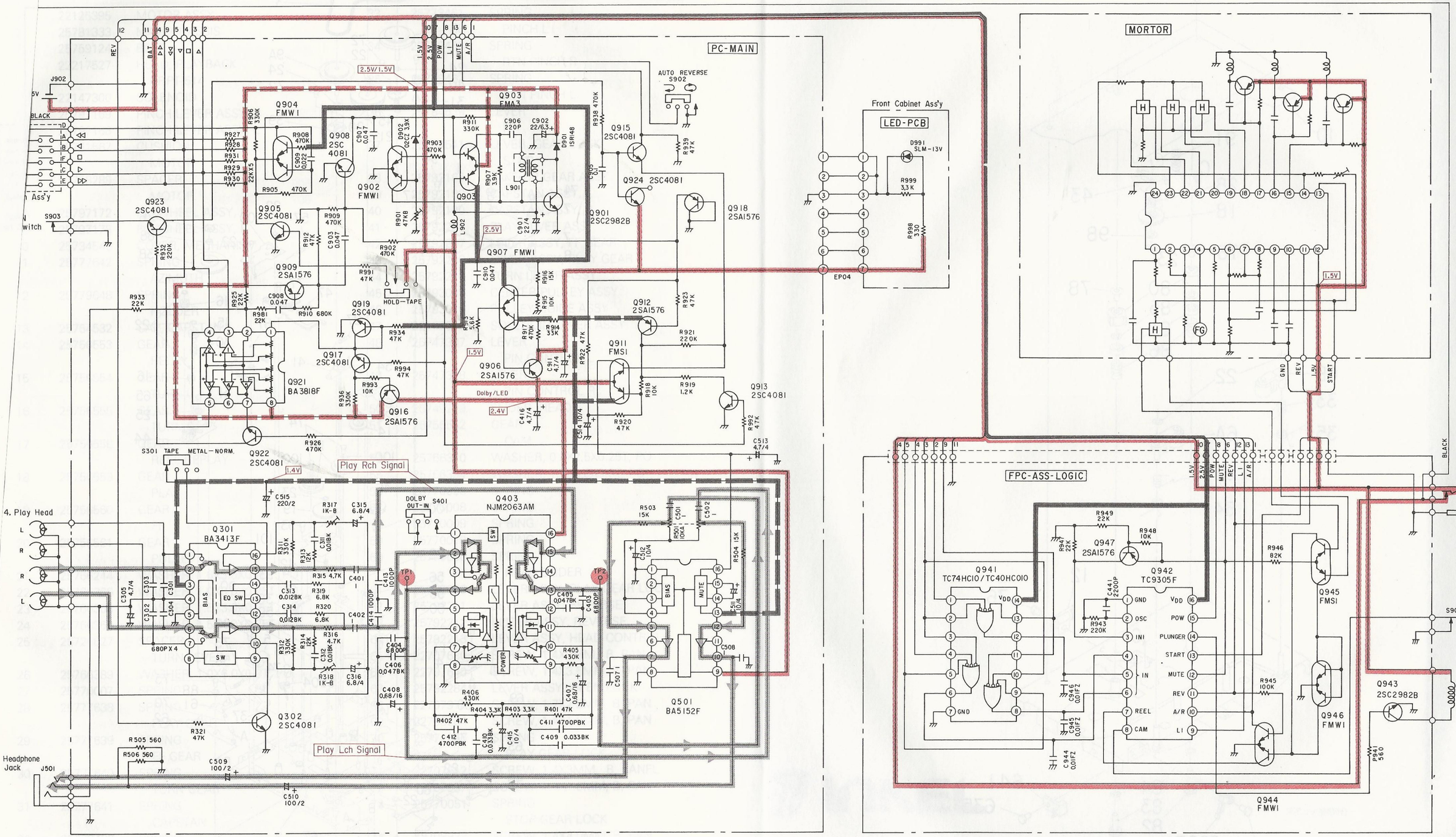

MECHANISM EXPLODED VIEW (UPPER)

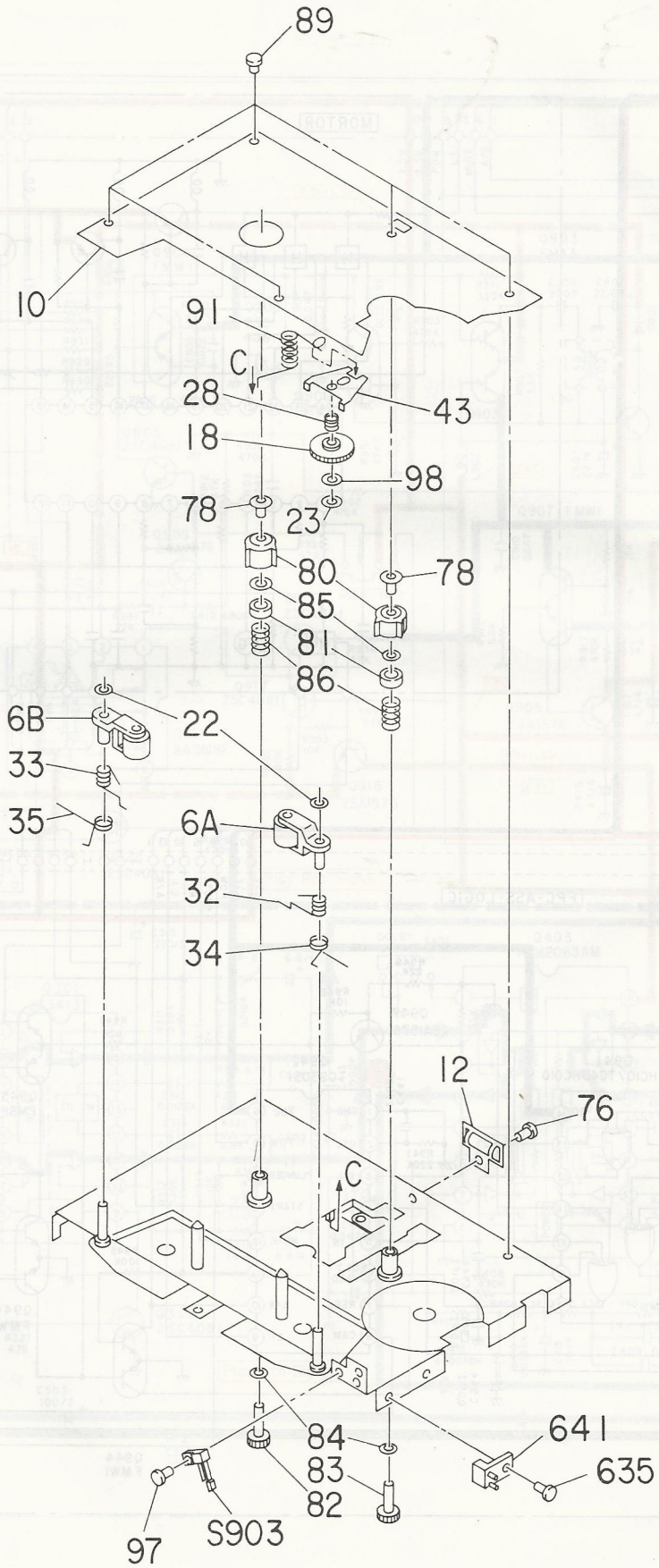

NOTE: Parts excluded in the parts list are not stocked since they are seldom required for routine service. Some delay should be anticipated when ordering these items.

MECHANISM EXPLODED VIEW (LOWER)

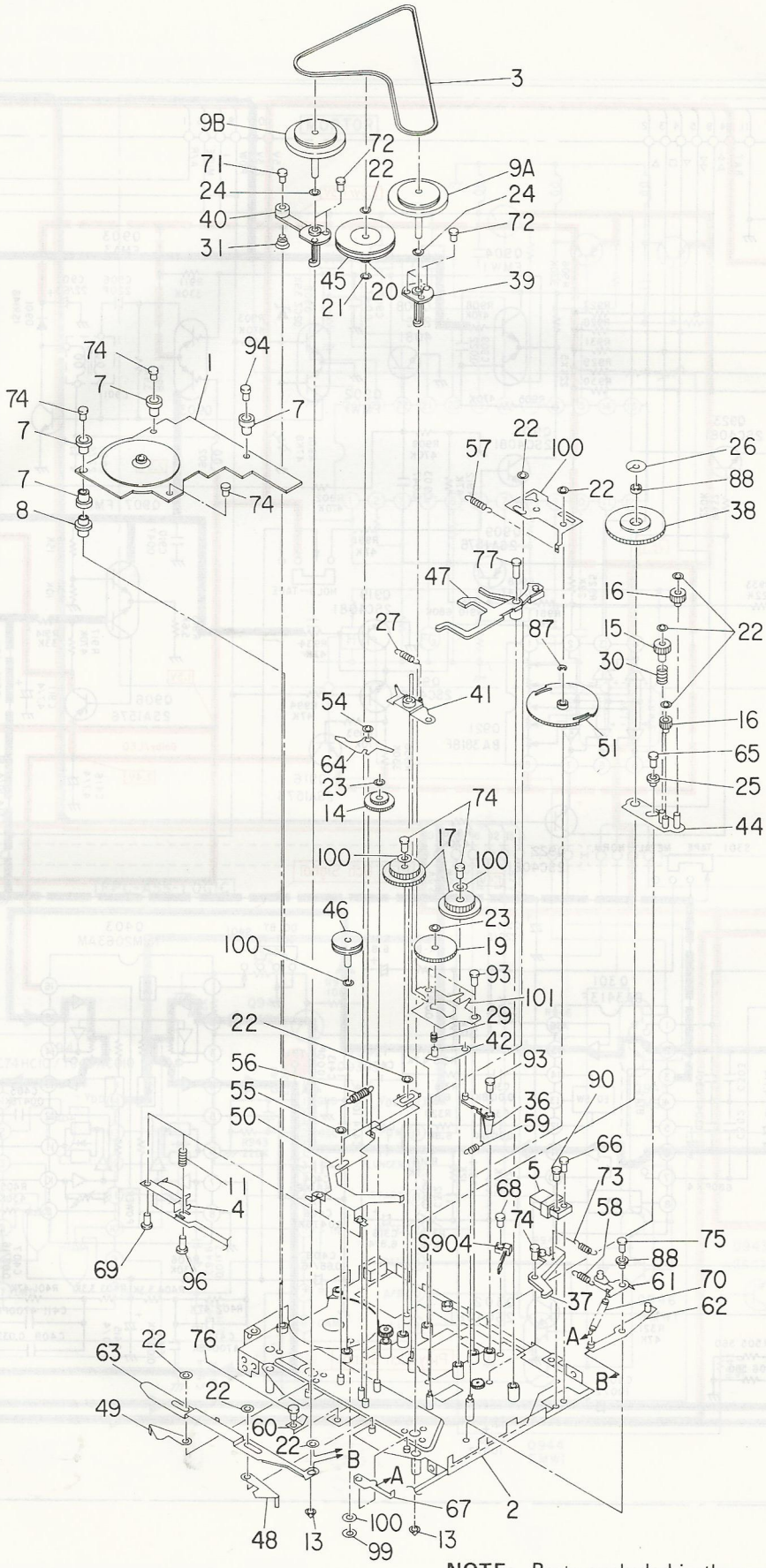

NOTE: Parts excluded in the parts list are not stocked since they are seldom required for routine service. Some delay should be anticipated when ordering these items.

MECHANISM PARTS LIST

Location No.	Part No.	Description
1	22125395	MOTOR ASSY
2	25781333	MAIN CHASSIS
3	25759124	BELT
4	22217527	HEAD, PLAYBACK HRPT-514
5	22147300	SOLENOID
6A	25797169	PINCH LEVER ASSY, R
6B	25797168	PINCH LEVER ASSY, L
7	25761567	CUSHION MOTOR
8	25758289	SPACER MOTOR
9A	25797172	FLYWHEEL ASSY, L
9B	25797173	FLYWHEEL ASSY, R
10	25734546	COVER, MECHANISM
11	25777642	SPRING AZIMUTH
12	25779648	SPRING HOLDER
13	25754532	CAP, CAPSTAN
14	25756553	GEAR RELAY
15	25756554	GEAR TURN L
16	25756555	GEAR TURN S
17	25756556	GEAR REEL REPLAY
18	25756559	GEAR PLAY
19	25756560	GEAR FF
20	25756561	GEAR PULLEY
21	25766244	WASHER, 1.6X3.0X0.25T, PO
22	25766366	WASHER, 1.0X3.0X0.25T, PO
23	25766368	WASHER, 1.5X3.0X0.25T, PO
24	25766369	WASHER, 1.5X4.0X0.25T, PO
25	25726827	SPACER TURN LEVER
26	25766389	WASHER, 1.0X6.0X0.3T, PO
27	25770007	SPRING
28	25777638	SPRING PLAY GEAR
29	25777639	SPRING FF GEAR
30	25777640	SPRING TURN GEAR
31	25777641	SPRING CAPSTAN
32	25778460	SPRING PINCH R
33	25778461	SPRING PINCH L
34	25778462	SPRING RTN PINCH R
35	25778463	SPRING RTN PINCH L
36	25784539	LEVER FF
37	25784541	LEVER, GEAR LOCK STOP
38	25792165	TAKE-UP GEAR ASSY
39	25792189	CAPSTAN ASSY, L
40	25792190	CAPSTAN ASSY, R
41	25792206	PLAY LEVER ASSY
42	25792207	LEVER ASSY, FF GEAR
43	25792208	LEVER ASSY, PLAY GEAR
44	25792210	TURN LEVER ASSY
45	25793008	CENTER PULLEY ASSY
46	25793010	PULLEY GUIDE ASSY
47	22147308	SOLENOID LEVER ASSY
48	25747337	LEVER PIN CONTROL L
49	25747338	LEVER PIN CONTROL R
50	25749219	SLIDER, HEAD
51	25756552	GEAR CAM
54	25766370	WASHER, 0.8X2.5X0.25T, PO
55	25766394	WASHER, 1.0X6.0X0.5T, PO
56	25770006	SPRING
57	25770008	SPRING
58	25770009	SPRING
59	25770010	SPRING
60	25779656	SPRING HEAD SLIDER
61	25792209	LEVER ASSY, PLAY GEAR LOCK
62	25792211	LEVER ASSY, REVERSE
63	25792212	SLIDER ASSY, REVERSE
64	25792213	LEVER ASSY, HEAD CONTROL
65	22707630	SCREW, 1.4X2MM, B, PAN
66	22707640	SCREW, 1.4X3.5MM, B, PAN
67	25792284	LEVER ASSY, OPEN LOCK
68	22707978	SCREW, 1.7X2.5MM, B, PAN
69	22708284	SCREW, 1.4X1.6MM, B, PAN
70	25770056	SPRING PLAY GEAR LOCK
71	22707612	SCREW, 1.4X3MM, B, PANFL
72	22707987	SCREW, 1.4X1.8MM, B, PAN
73	25770051	SPRING STOP GEAR LOCK
74	22708822	SCREW, 1.4X4.0MM, B, PAN
75	22707811	SCREW, 1.4X2.5MM, B, FLT

CABINET PARTS LIST

Location No.	Part No.	Description
76	22707967	SCREW, 1.4X1.2MM, B, PAN
77	22708823	SCREW, 1.4X5.5MM, B, PAN
78	25754531	REEL TOP
80	25754533	COLLAR, REEL
81	25754528	SPACER
82	25756557	GEAR REEL L
83	25756564	GEAR REEL R
84	25766367	WASHER, 2.1X3.0X0.13T, PO
85	25766400	WASHER, 3.7X4.9X0.25T, PO
86	25777703	SPRING REEL
87	25735259	E RING, 1.2MM
88	25726828	SPACER
89	22707495	SCREW, 1.4X1.6MM, C, FLT
90	22708926	SCREW, 1.4X3.5MM, C, CPAN
91	25778523	SPRING PLAY GEAR LEVER
93	22708821	SCREW, 1.4X3.0MM, B, PAN
94	22708889	SCREW, 1.4X3.5MM, B, CPAN
95	22708941	SCREW, 1.4X2.0MM, B, APAN
96	22708956	SCREW, 1.4X5.0MM
97	22708964	SCREW, 1.4X2.6MM, B, PAN
98	25766299	WASHER, 2.1MM
99	25766388	WASHER, 1.0X2.5X0.2T, PO
100	25766410	WASHER, 1.3X3.0X0.13T, PO

Location No.	Part No.	Description
601	25889465	FRONT CABINET ASSY, BLACK EUROPE/AUSTRALIA
601	25889466	FRONT CABINET ASSY, BLACK OTHERS
601	25889486	FRONT CABINET ASSY, WHITE EUROPE
601	25889487	FRONT CABINET ASSY, WHITE OTHERS
602	25889541	BACK CABINET, BLACK
602	25889542	BACK CABINET, WHITE
606	25727305	SHAFT, HINGE
607	25775339	SPRING LEAF
608	25777675	SPRING UP
611	25887443	DECORATION, TOP
612	25887330	DECORATION PLATE, BATTERY
613	25888269	BUTTON LEAF
614	25888270	KNOB OPEN
616	25888272	BUTTON UP
617	25888279	KNOB SW2
618	25792253	UP LEVER ASSY
619	25889196	BUTTON ASSY
621	25888280	KNOB SW
622	22900869	NAME LABEL EUROPE/AUSTRALIA
622	22900870	NAME LABEL OTHERS
631	22707495	SCREW, 1.4X1.6MM, C, FLT
632	22708988	SCREW, 1.4X2.5MM, B, AOVL BLACK
632	22708989	SCREW, 1.4X2.5MM, C, AOVL WHITE
633	22708938	SCREW, 1.4X2.5MM, C, APAN WHITE
633	22708939	SCREW, 1.4X2.0MM, B, AFLT BLACK
634	22708951	SCREW, 1.4X1.9MM, B
635	22708941	SCREW, 1.4X2.0MM, B, APAN
636	22708990	SCREW, 1.4X2.2MM, C, APAN WHITE
636	22708991	SCREW, 1.4X2.2MM, B, APAN BLACK
637	22708957	SCREW, 1.4X7.0MM, C, CFLT
638	22708882	SCREW, 1.4X2.5MM, B, APAN
640	22707967	SCREW, 1.4X1.2MM, B, PAN
641	22186423	CONTACT PIN
642	22708986	SPECIAL SCREW, 1.4X1.8MM
643	22708964	SPECIAL SCREW, 1.4X2.6MM

CABINET EXPLODED VIEW

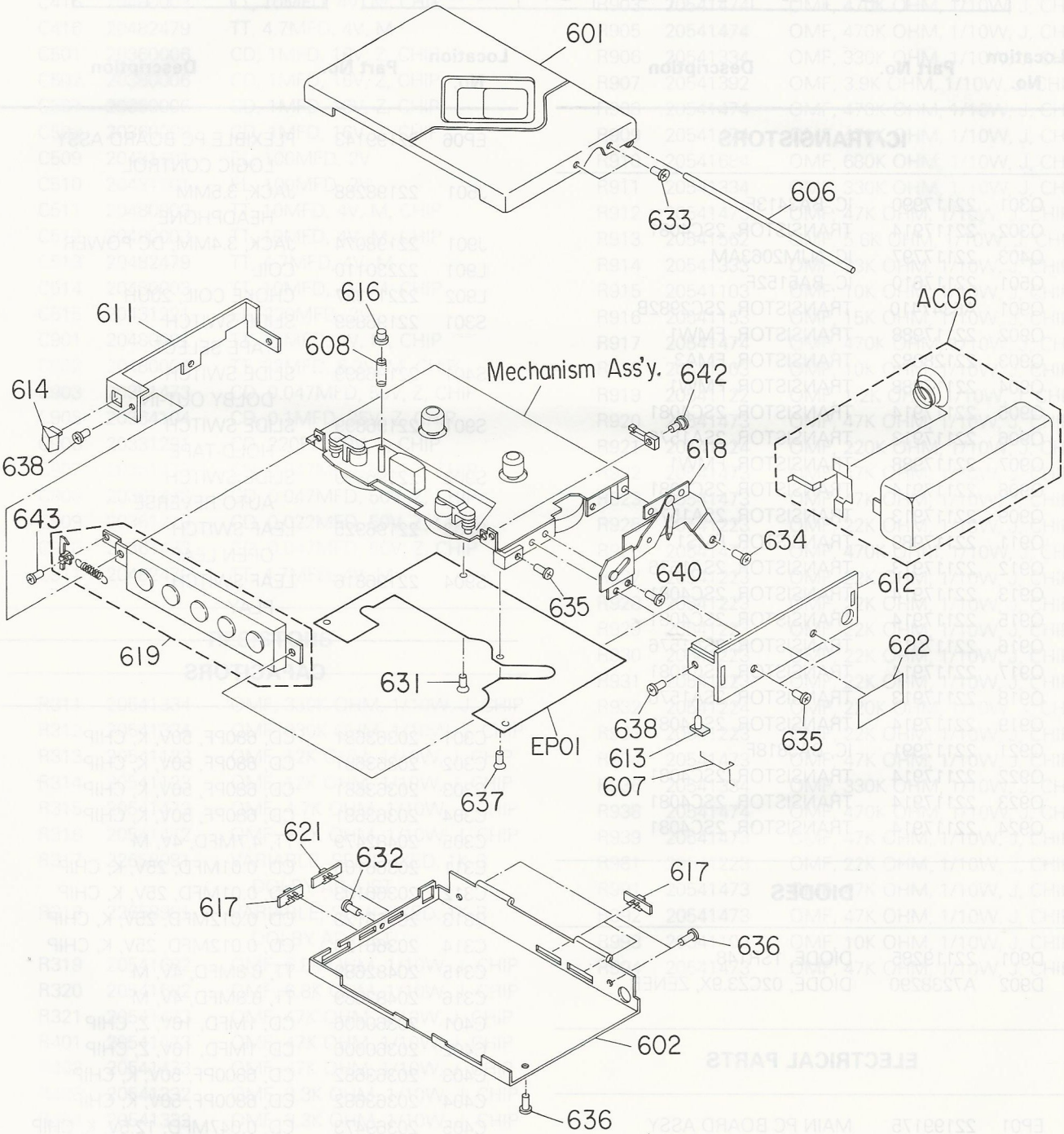

NOTE: Parts excluded in the parts list are not stocked since they are seldom required for routine service. Some delay should be anticipated when ordering these items.

PARTS LIST

ABBREVIATIONS

1. **CAPACITOR:** CD = Ceramic Disk, PF = Plastic Film, BL = Barrier Layer, EL = Electrolytic, MY = Mylar, PP = Polypropylene, PS = Polystyrene, TT = Tantalum, PE = Polyethylene
   MFD = Microfarad, PF = Picofarad, V = Voltage, NP = Non Polarity
2. **RESISTOR:** CF = Ceramic Film, CC = Carbon Composition, OMF = Oxide Metal Film, MF = Metal Film
   K = Kilo (1000), M = Mega (1000000)
3. **TOLERANCE**

Symbol	G	J	K	M	N	Z	P
%	±2	±5	±10	±20	±30	−20+80	0+100

Symbol	C	D
pF	±0.25	±0.5

IC/TRANSISTORS

Location No.	Part No.	Description
Q301	22117990	IC, BA3413F
Q302	22117914	TRANSISTOR, 2SC4081
Q403	22117797	IC, NJM2063AM
Q501	22117610	IC, BA5152F
Q901	A6347410	TRANSISTOR, 2SC2982B
Q902	22117988	TRANSISTOR, FMW1
Q903	22128082	TRANSISTOR, FMA3
Q904	22117988	TRANSISTOR, FMW1
Q905	22117914	TRANSISTOR, 2SC4081
Q906	22117913	TRANSISTOR, 2SA1576
Q907	22117988	TRANSISTOR, FMW1
Q908	22117914	TRANSISTOR, 2SC4081
Q909	22117913	TRANSISTOR, 2SA1576
Q911	22117989	TRANSISTOR, FMS1
Q912	22117913	TRANSISTOR, 2SA1576
Q913	22117914	TRANSISTOR, 2SC4081
Q915	22117914	TRANSISTOR, 2SC4081
Q916	22117913	TRANSISTOR, 2SA1576
Q917	22117914	TRANSISTOR, 2SC4081
Q918	22117913	TRANSISTOR, 2SA1576
Q919	22117914	TRANSISTOR, 2SC4081
Q921	22117991	IC, BA3818F
Q922	22117914	TRANSISTOR, 2SC4081
Q923	22117914	TRANSISTOR, 2SC4081
Q924	22117914	TRANSISTOR, 2SC4081

DIODES

Location No.	Part No.	Description
D901	22119285	DIODE, 1SR148
D902	A7238290	DIODE, 02CZ3.9X, ZENER

ELECTRICAL PARTS

Location No.	Part No.	Description
EP01	22199175	MAIN PC BOARD ASSY
EP04	22199082	FLEXIBLE PC BOARD TUNER(LED)
EP05	22199156	FLEXIBLE PC BOARD HEAD
EP06	22199143	FLEXIBLE PC BOARD ASSY LOGIC CONTROL
J501	22198288	JACK, 3.5MM HEADPHONE
J901	22198074	JACK, 3.4MM, DC POWER
L901	22230110	COIL
L902	22211327	CHOKE COIL, 20UH
S301	22196899	SLIDE SWITCH TAPE SELECT
S401	22196899	SLIDE SWITCH DOLBY OUT-IN
S901	22196899	SLIDE SWITCH HOLD-TAPE
S902	22196899	SLIDE SWITCH AUTO REVERSE
S903	22196925	LEAF SWITCH OPEN LEAF
S904	22196816	LEAF SWITCH PLAY

CAPACITORS

Location No.	Part No.	Description
C301	20363681	CD, 680PF, 50V, K, CHIP
C302	20363681	CD, 680PF, 50V, K, CHIP
C303	20363681	CD, 680PF, 50V, K, CHIP
C304	20363681	CD, 680PF, 50V, K, CHIP
C305	20482479	TT, 4.7MFD, 4V, M
C311	20366103	CD, 0.01MFD, 25V, K, CHIP
C312	20366103	CD, 0.01MFD, 25V, K, CHIP
C313	20366123	CD, 0.012MFD, 25V, K, CHIP
C314	20366123	CD, 0.012MFD, 25V, K, CHIP
C315	20482689	TT, 6.8MFD, 4V, M
C316	20482689	TT, 6.8MFD, 4V, M
C401	20360006	CD, 1MFD, 16V, Z, CHIP
C402	20360006	CD, 1MFD, 16V, Z, CHIP
C403	20363682	CD, 6800PF, 50V, K, CHIP
C404	20363682	CD, 6800PF, 50V, K, CHIP
C405	20369473	CD, 0.047MFD, 12.5V, K, CHIP
C406	20369473	CD, 0.047MFD, 12.5V, K, CHIP
C407	20485688	TT, 0.68MFD, 16V, M
C408	20485688	TT, 0.68MFD, 16V, M
C409	20369333	CD, 0.033MFD, 12.5V, K, CHIP

Location No.	Part No.	Description
C410	20369333	CD, 0.033MFD, 12.5V, K, CHIP
C411	20363472	CD, 4700PF, 50V, K, CHIP
C412	20363472	CD, 4700PF, 50V, K, CHIP
C413	20363102	CD, 1000PF, 50V, K, CHIP
C414	20363102	CD, 1000PF, 50V, K, CHIP
C415	20480003	TT, 10MFD, 4V, M, CHIP
C416	20482479	TT, 4.7MFD, 4V, M
C501	20360006	CD, 1MFD, 16V, Z, CHIP
C502	20360006	CD, 1MFD, 16V, Z, CHIP
C507	20360006	CD, 1MFD, 16V, Z, CHIP
C508	20360006	CD, 1MFD, 16V, Z, CHIP
C509	20431101	EL, 100MFD, 2V
C510	20431101	EL, 100MFD, 2V
C511	20480003	TT, 10MFD, 4V, M, CHIP
C512	20480003	TT, 10MFD, 4V, M, CHIP
C513	20482479	TT, 4.7MFD, 4V, M
C514	20480003	TT, 10MFD, 4V, M, CHIP
C515	20431221	EL, 220MFD, 2V
C901	20480002	TT, 22MFD, 4V, M, CHIP
C902	20480004	TT, 22MFD, 6.3V, M, CHIP
C903	20361473	CD, 0.047MFD, 50V, Z, CHIP
C905	20364104	CD, 0.1MFD, 25V, Z, CHIP
C906	20331221	CD, 220PF, 50V, J, CHIP
C907	20361473	CD, 0.047MFD, 50V, Z, CHIP
C908	20361473	CD, 0.047MFD, 50V, Z, CHIP
C909	20361223	CD, 0.022MFD, 50V, Z, CHIP
C910	20361473	CD, 0.047MFD, 50V, Z, CHIP
C911	20482479	TT, 4.7MFD, 4V, M

RESISTORS

Location No.	Part No.	Description
R311	20541334	OMF, 330K OHM, 1/10W, J, CHIP
R312	20541334	OMF, 330K OHM, 1/10W, J, CHIP
R313	20541123	OMF, 12K OHM, 1/10W, J, CHIP
R314	20541123	OMF, 12K OHM, 1/10W, J, CHIP
R315	20541472	OMF, 4.7K OHM, 1/10W, J, CHIP
R316	20541472	OMF, 4.7K OHM, 1/10W, J, CHIP
R317	22658981	VARIABLE, SEMI-FIXED, 1K-B DOLBY ADJUST
R318	22658981	VARIABLE, SEMI-FIXED, 1K-B DOLBY ADJUST
R319	20541682	OMF, 6.8K OHM, 1/10W, J, CHIP
R320	20541682	OMF, 6.8K OHM, 1/10W, J, CHIP
R321	20541473	OMF, 47K OHM, 1/10W, J, CHIP
R401	20541473	OMF, 47K OHM, 1/10W, J, CHIP
R402	20541473	OMF, 47K OHM, 1/10W, J, CHIP
R403	20541332	OMF, 3.3K OHM, 1/10W, J, CHIP
R404	20541332	OMF, 3.3K OHM, 1/10W, J, CHIP
R405	20541434	OMF, 430K OHM, 1/10W, J, CHIP
R406	20541434	OMF, 430K OHM, 1/10W, J, CHIP
R501	22650481	VARIABLE, 10K OHM, A VOLUME
R503	20541153	OMF, 15K OHM, 1/10W, J, CHIP
R504	20541153	OMF, 15K OHM, 1/10W, J, CHIP
R505	20541561	OMF, 560 OHM, 1/10W, J, CHIP
R506	20541561	OMF, 560 OHM, 1/10W, J, CHIP
R901	22658936	VARIABLE, SEMI-FIXED, 47K MOTOR SPEED
R902	20541474	OMF, 470K OHM, 1/10W, J, CHIP
R903	20541474	OMF, 470K OHM, 1/10W, J, CHIP
R905	20541474	OMF, 470K OHM, 1/10W, J, CHIP
R906	20541334	OMF, 330K OHM, 1/10W, J, CHIP
R907	20541392	OMF, 3.9K OHM, 1/10W, J, CHIP
R908	20541474	OMF, 470K OHM, 1/10W, J, CHIP
R909	20541474	OMF, 470K OHM, 1/10W, J, CHIP
R910	20541684	OMF, 680K OHM, 1/10W, J, CHIP
R911	20541334	OMF, 330K OHM, 1/10W, J, CHIP
R912	20541473	OMF, 47K OHM, 1/10W, J, CHIP
R913	20541562	OMF, 5.6K OHM, 1/10W, J, CHIP
R914	20541333	OMF, 33K OHM, 1/10W, J, CHIP
R915	20541103	OMF, 10K OHM, 1/10W, J, CHIP
R916	20541153	OMF, 15K OHM, 1/10W, J, CHIP
R917	20541474	OMF, 470K OHM, 1/10W, J, CHIP
R918	20541103	OMF, 10K OHM, 1/10W, J, CHIP
R919	20541122	OMF, 1.2K OHM, 1/10W, J, CHIP
R920	20541473	OMF, 47K OHM, 1/10W, J, CHIP
R921	20541224	OMF, 220K OHM, 1/10W, J, CHIP
R922	20541473	OMF, 47K OHM, 1/10W, J, CHIP
R923	20541473	OMF, 47K OHM, 1/10W, J, CHIP
R925	20541223	OMF, 22K OHM, 1/10W, J, CHIP
R926	20541474	OMF, 470K OHM, 1/10W, J, CHIP
R927	20541223	OMF, 22K OHM, 1/10W, J, CHIP
R928	20541223	OMF, 22K OHM, 1/10W, J, CHIP
R929	20541223	OMF, 22K OHM, 1/10W, J, CHIP
R930	20541223	OMF, 22K OHM, 1/10W, J, CHIP
R931	20541223	OMF, 22K OHM, 1/10W, J, CHIP
R932	20541224	OMF, 220K OHM, 1/10W, J, CHIP
R933	20541223	OMF, 22K OHM, 1/10W, J, CHIP
R934	20541473	OMF, 47K OHM, 1/10W, J, CHIP
R936	20541334	OMF, 330K OHM, 1/10W, J, CHIP
R938	20541474	OMF, 470K OHM, 1/10W, J, CHIP
R939	20541473	OMF, 47K OHM, 1/10W, J, CHIP
R981	20541223	OMF, 22K OHM, 1/10W, J, CHIP
R991	20541473	OMF, 47K OHM, 1/10W, J, CHIP
R992	20541473	OMF, 47K OHM, 1/10W, J, CHIP
R993	20541103	OMF, 10K OHM, 1/10W, J, CHIP
R994	20541473	OMF, 47K OHM, 1/10W, J, CHIP

Location No.	Part No.	Description

ACCESSORIES

AC01	22152741	HEADPHONE, HR-P4, WHITE
AC01	22152742	HEADPHONE, HR-P4, BLACK
AC02	22908522	OWNER'S MANUAL EUROPE
AC02	22908523	OWNER'S MANUAL AUSTRALIA
AC02	22908524	OWNER'S MANUAL OTHERS
AC03	22140016	REMOTE CONTROL UNIT, WHITE
AC03	22140017	REMOTE CONTROL UNIT, BLACK
AC04	22991184	CARRING CASE
AC06	22829023	BATTERY CASE