Private and Confidential

For Trade Use Only

"HIS MASTER'S VOICE"

CIRCUIT DIAGRAM AND PARTS LIST

for

CHASSIS TYPE J5

TRANSISTOR PORTABLE RADIO RECEIVER

THE GRAMOPHONE COMPANY LIMITED

(Inc. in England)

HOMEBUSH - - N.S.W.

PART No. 683-0391

H. CLARK PTY. LTD.
PRINTERS
CAMPERDOWN, N.S.W.

TECHNICAL SPECIFICATION

FREQUENCY RANGE:
540 — 1600 Kc/s.
(555 — 187.5 metres).

INTERMEDIATE FREQUENCY:
455 Kc/s.

BATTERY:
One Eveready Type 2362.

BATTERY CONSUMPTION:
Zero audio output ..... 10 milliamperes.
50 milliwatts audio output ... 30 milliamperes.

TRANSISTORS:

1 Type 2N412	Converter
2 Type 2N410	1st and 2nd I.F. Amplifiers
1 Type 2N406	Audio Amplifier
1 Type 2N408	Audio Driver
2 Type 2N408	Push-Pull Audio Output.

CRYSTAL DIODES, TYPE GEX34:
1 Audio Detector and A.V.C.
1 Converter Clamp
1 Overload Diode.

LOUDSPEAKER:
$2\frac{3}{4}$-inch Permanent Magnet No. 50,000.
V.C. Impedance at 400 c/s ..... 15 ohms.
Undistorted Power Output ..... 150 MW.

CONTROLS:
Tuning Control: Front left of cabinet.
On/Off Volume Control: Right-hand end of cabinet.

DIMENSIONS:

Height	$3^{9}/_{16}''$
Width	$6''$
Depth	$1^{11}/_{16}''$
Weight with Battery	$1\frac{1}{4}$ lbs.

PRINTED BOARD REMOVAL:

Remove the tuning knob by unscrewing its centre locking screw and twisting the knob free. Slacken off the captivated rear retaining screw and remove cabinet back. Close the gang, remove the volume control knob and the three board mounting screws may be removed.

Lift the board from the cabinet and roll it over, exposing the wiring side. The speaker may be disconnected if required but, in general, this is not necessary.

D.C. RESISTANCE OF WINDINGS

Winding	*D.C. Resistance in ohms*	*Winding*	*D.C. Resistance in ohms*
Ferrite Rod T1	Primary ..... *	I.F. Transformers T3, T4 & T5	Primary 1.2
	Secondary ... 1.8		Secondary ..... *
Driver Transformer T6	Primary ..... *	Driver Transformer T6	Primary 300
	Secondary ... 1.2		Secondary ... 300
		Output Transformer T7	Primary 50
			Secondary 1.4

* Indicates less than 1 ohm.

RESISTANCE MEASUREMENT:

Although servicing by resistance measurement is one of the most common methods used for testing valve radios, this method has severe limitations when applied to the testing of circuits which contain transistors.

Transistors will conduct an electric current when the terminal voltage is supplied from an ohm-meter just as readily when the voltage is applied from a battery. Because of this transistor conductivity, misleading indication will be obtained and the transistors themselves can be permanently damaged by using resistance measurement.

VOLTAGE CHART

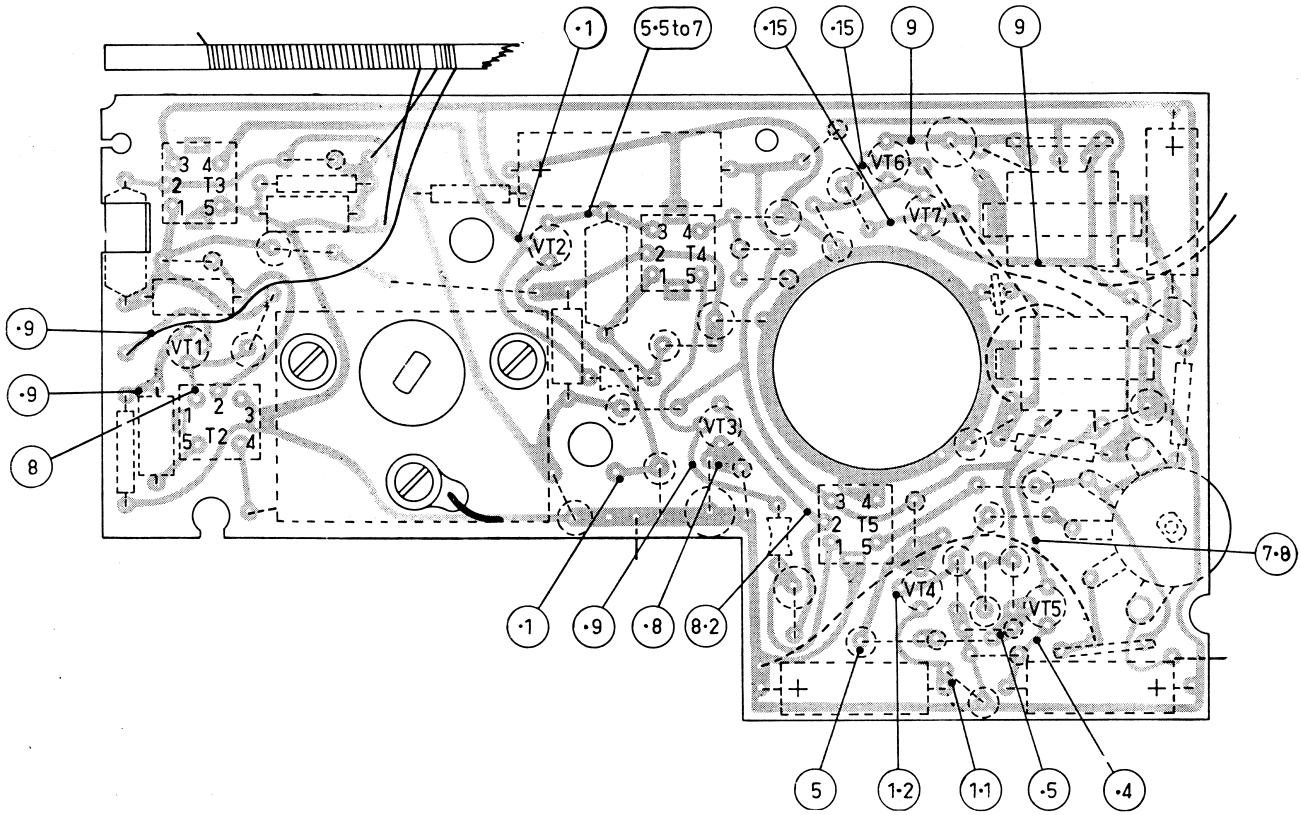

PRELIMINARY TESTS:

Regardless of what the stated complaint may be, the following overall conditions should be checked:

(a) Condition of the battery (voltage with the set turned on).

(b) Overall current drain with no signal input (should be 9—12 mA).

(c) Soldered connections. Turn the radio on with maximum volume. While listening to the loudspeaker, gently wiggle all visible components and leads with an insulated tool such as an alignment tool.

(d) Sensitivity by listening test.

(e) Distortion by listening test.

ALIGNMENT TABLE

Order	*Connect High Side of Generator To*	*Tune Generator To*	*Tune Receiver To*	*Adjust for Maximum Peak Output*
1	Aerial Section of Gang	455 Kc/s.	H.F. Limit	Core T5
2	Aerial Section of Gang	455 Kc/s.	H.F. Limit	Core T4
3	Aerial Section of Gang	455 Kc/s.	H.F. Limit	Core T3
	Repeat steps 1, 2 and 3 until maximum output is obtained.‡			
4	Inductively coupled * to Rod Aerial	600 Kc/s.	600 Kc/s.	L.F. Osc. Core Adj. (T2) †
5	Inductively coupled * to Rod Aerial	1,620 Kc/s.	Gang fully open	H.F. Osc. Adj. (C4)
6	Inductively coupled * to Rod Aerial	1,500 Kc/s.	1,500 Kc/s.	H.F. Aerial Adj. (C2) x
	Repeat steps 4, 5 and 6.			

* A coil comprising 3 turns of 16 gauge D.C.C. wire about 12 inches in diameter should be connected across the output terminals to the generator, placed concentric with the rod aerial and distant not less than one foot from it.

† Rock the tuning control back and forth through the signal.

x Rock generator back and forth through the signal as there is some pulling effect on this adjustment.

‡ These transformers are a very high Q miniature type. It should be appreciated then that the amount of travel for the tuning core to cover its tuning range is much smaller than on normal I.F. transformers. Tuning the I.F. thus becomes more critical, and the following hints will prove useful.

(a) The tuning tool used should be a small metal screwdriver whose tip fits cleanly into the tuning core.

(b) When turning the core, do not use any downward pressure as the threaded boss has enough resilience to detune the I.F. after the pressure has been relieved.

(c) The threads on the boss may be damaged if the core is wound in and forced against the winding bobbin. This should never happen as only a light torque is needed to turn the tuning core normally.

COMPONENT LOCATION

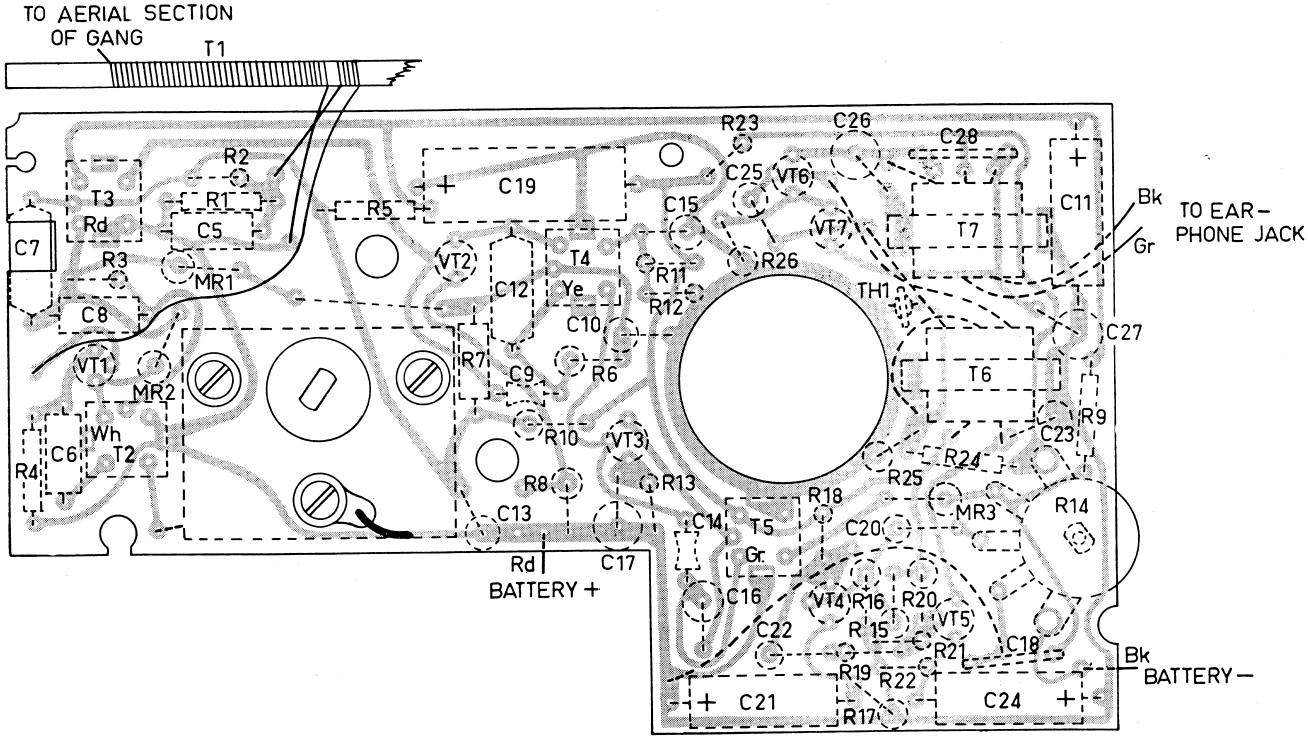

COMPONENT LOCATION

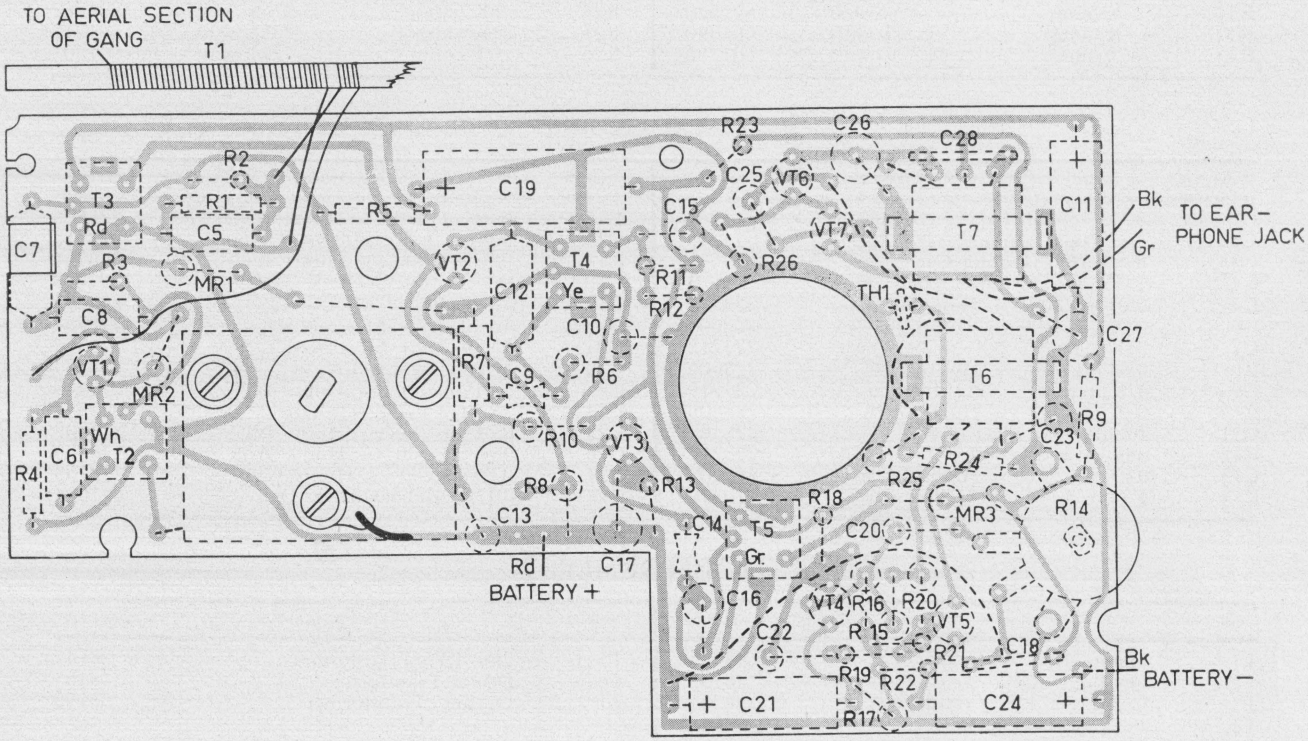

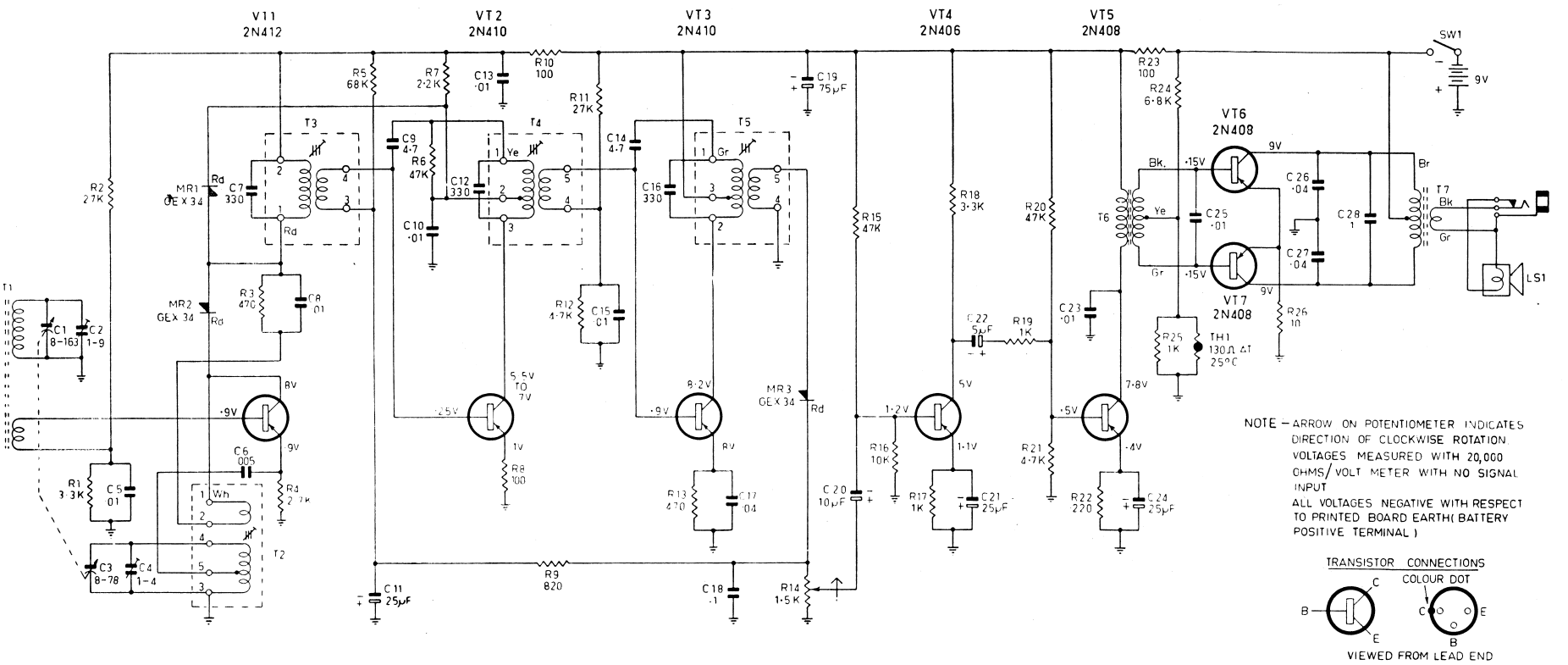

NOTE – ARROW ON POTENTIOMETER INDICATES DIRECTION OF CLOCKWISE ROTATION.
VOLTAGES MEASURED WITH 20,000 OHMS/VOLT METER WITH NO SIGNAL INPUT
ALL VOLTAGES NEGATIVE WITH RESPECT TO PRINTED BOARD EARTH(BATTERY POSITIVE TERMINAL)

TRANSISTOR CONNECTIONS

VIEWED FROM LEAD END

CIRCUIT DIAGRAM

COMPONENT PARTS LIST

RESISTORS

All Resistors ± 10% Carbon unless otherwise stated

Code No.	Description	Part No.	Code No.	Description	Part No.
R1	3.3K ohms ½ watt	601290	R14	1.5K ohms Volume Control w/s	620014
R2	27K ohms ½ watt	601520	R15	47K ohms ½ watt	601610
R3	470 ohms ½ watt	601180	R16	10K ohms ½ watt	601400
R4	2.7K ohms ½ watt	601260	R17	1K ohms ½ watt	601210
R5	68K ohms ½ watt	601632	R18	3.3K ohms ½ watt	601290
R6	47K ohms ½ watt	601610	R19	2.2K ohms ½ watt	601240
R7	2.2K ohms ½ watt	601240	R20	47K ohms ½ watt	601610
R8	100 ohms ½ watt	601070	R21	4.7K ohms ½ watt	601340
R9	820 ohms ½ watt	601202	R22	220 ohms ½ watt	601091
R10	100 ohms ½ watt	601070	R23	100 ohms ½ watt	601070
R11	27K ohms ½ watt	601520	R24	6.8K ohms ½ watt	601362
R12	4.7K ohms ½ watt	601340	R25	1K ohms ½ watt	601210
R13	470 ohms ½ watt	601180	R26	10 ohms ½ watt	601001

CAPACITORS

Code No.	Description	Part No.	Code No.	Description	Part No.
C1	8 — 163 pf Tuning Aerial	231171	C15	0.01 uf 200 vw Hunts W99	228609
C2	1 — 9 pf Trimmer Aerial		C16	330 pf ± 5% 600 vw Styroseal	223712
C3	8 — 78pf Tuning Osc.		C17	0.04 uf 200 vw Hunts W99	228750
C4	1 — 4pf Trimmer Osc.		C18	0.1 uf 100 vw Hi-K Disc	227038
C5	0.01 uf 200 vw Hunts W99	228609	C19	75 uf 10 vw Electrolytic	229675
C6	0.005 uf 200 vw Hunts W 99	226005	C20	10 uf 3 vw Electrolytic	228757
C7	330 pf ± 5% 600 vw Styroseal	223712	C21	25 uf 3 vw Electrolytic	229562
C8	0.01 uf 200 vw Hunts W99	228609	C22	5 uf 6 vw Electrolytic	228253
C9	4.7 pf ± 5% NPO Tubular	220219	C23	0.01 uf 200 vw Hunts W99	228609
C10	0.01 uf 200 vw Hunts W99	228609	C24	25 uf 3 vw Electrolytic	229562
C11	25 uf 3 vw Electrolytic	229562	C25	0.01 uf 200 vw Hunts W99	228609
C12	330 pf ± 5% 600 vw Styroseal	223712	C26	0.04 uf 200 vw Hunts W99	228750
C13	0.01 uf 200 vw Hunts W99	228609	C27	0.04 uf 200 vw Hunts W99	228750
C14	4.7 pf ± 5% NPO Tubular	220219	C28	0.1 uf 100 vw Hi-K Disc	227038

TRANSFORMERS

Code No.	Description	Part No.	Code No.	Description	Part No.
T1	Ferrite Rod Aerial	38755	T5	2nd I.F. Transformer	38749
T2	Oscillator Coil	38753	T6	Driver Transformer	38155
T3	Converter I.F. Transformer	38751	T7	Output Transformer	38158
T4	1st I.F. Transformer	38747			

TRANSISTORS

Code No.	Description	Part No.	Code No.	Description	Part No.
VT1	2N412		VT6	2N408	
VT2	2N410		VT7	2N408	
VT3	2N410		MR1	Germanium Diode GEX 34	
VT4	2N406		MR2	Germanium Diode GEX 34	
VT5	2N408		MR3	Germanium Diode GEX 34	

MISCELLANEOUS

Code No.	Description	Part No.	Code No.	Description	Part No.
TH1	130 ohms at 25 degrees C. N.T.C.	893703	LS1	2¾-inch Permanent Magnet Speaker	50000
SW1	On/Off Switch (on R14).				