MITSUBISHI CAR AUDIO

SERVICE MANUAL

CASSETTE CAR STEREO

MODEL : GX-101EM

SPECIFICATIONS

• Power source voltage	DC13.2 ± 2.4V (– earth)
• Power current consumption	0.7A
• Output	6.5W + 6.5W
• Frequency characteristic	Over 45dB
• Wow flutter	0.15% (JIS Wr. m. s)
• Winding torque	40 ~ 60 g · cm
• Compatible impedance	4Ω
• External dimensions	140W x 50H x 175D mm
• Weight	1.4 kg

CONSTRUTIONS

Body	
Escutcheon	702L041O1
Bracket body	591M309O1
Porous Plate	590M755O1
Warranty Card	857L045O1
Instruction Manual	871L138O4
Caution Note	857M031O1
Nuts	891M094O1
Trunk Lead	242M143O1

FEATURES

- Equipped with DIN cord terminal by which pre-amplifier output can be taken out. A component system can be completed by combining with the graphic equalizer or the main amplifier (Model CV-22EM).
- Automatic ejection mechanism ejects the cassette automatically when the tape is finished.
- Automatic slot-in system.
- Application of hard permalloy head having superior resistance to wear enables regeneration of the chrome tape.
- FF (fast feed) device locking mechanism is equipped.

DISINTEGATION

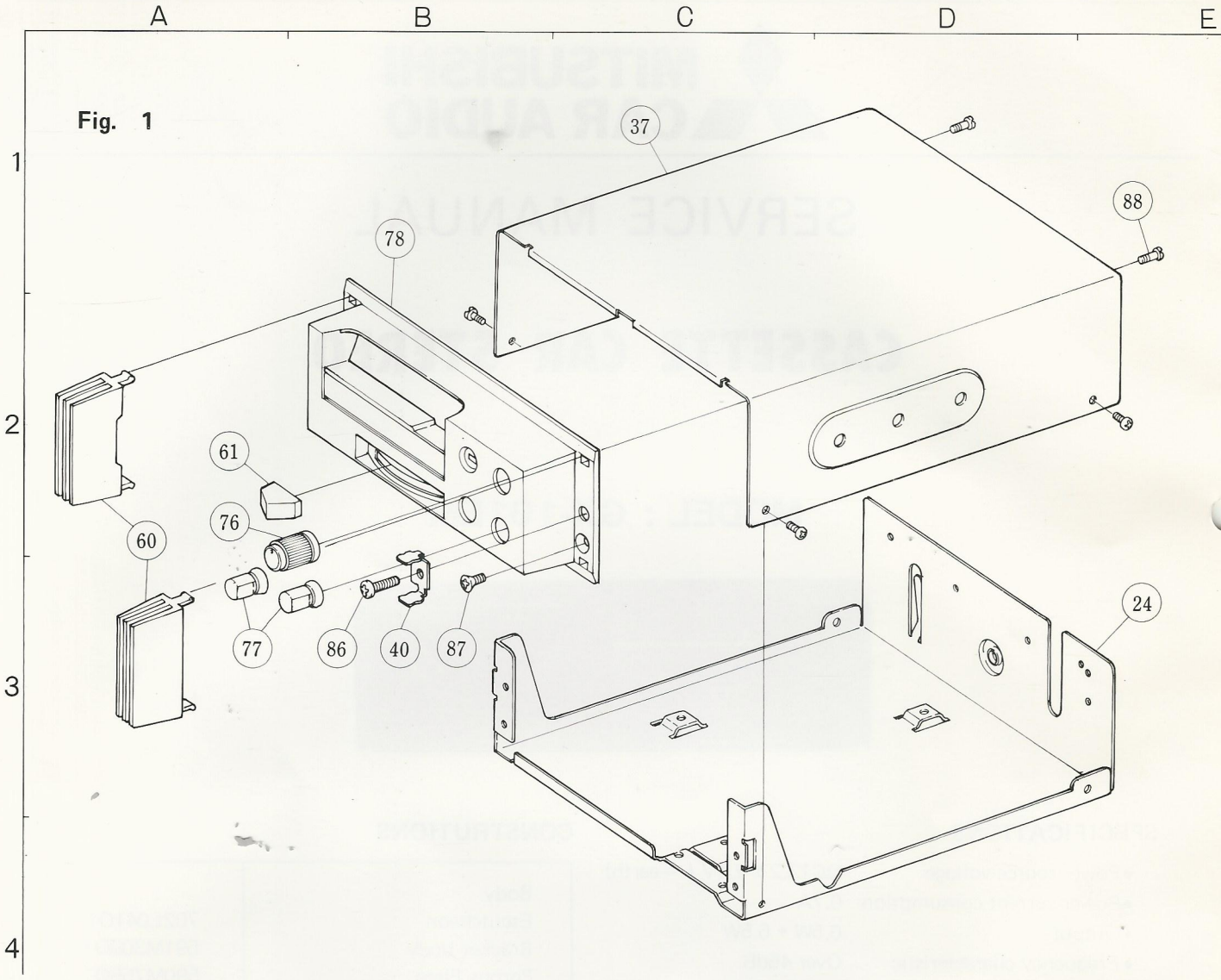

Fig. 2

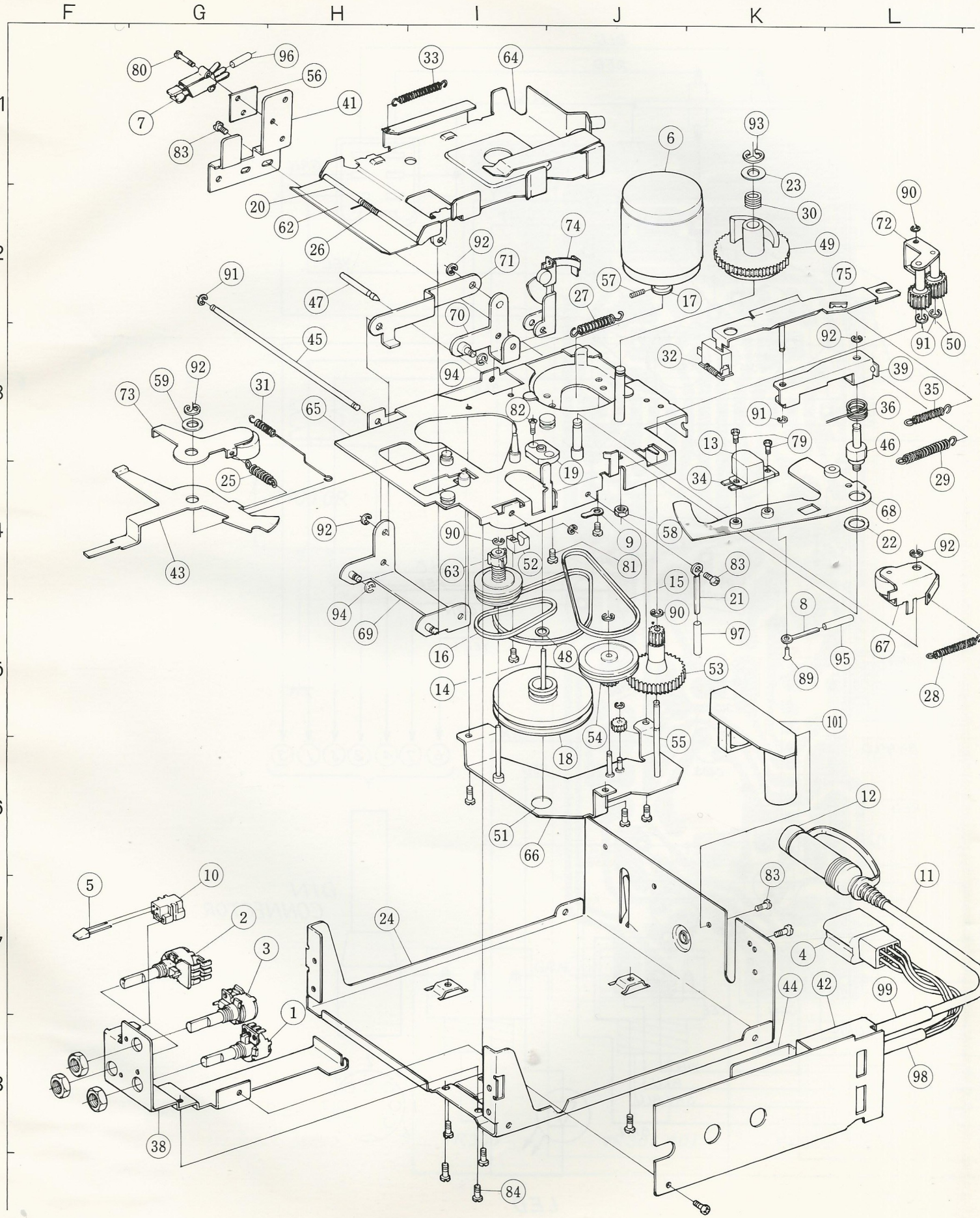
F
G
H
I
J
K
L
80
96
56
7
41
83
33
64
20
62
26
6
93
23
30
90
72
49
74
92
71
91
47
70
57
27
17
75
45
94
32
92
91
50
39
59
92
31
73
65
82
91
35
36
13
79
46
25
19
34
29
68
92
90
58
22
92
43
63
52
81
83
15
21
8
94
69
90
97
67
16
48
95
53
89
28
14
101
54
55
18
12
51
66
5
10
83
11
2
24
3
4
44
42
99
1
98
38
84

PARTS LIST

MECHANICAL PARTS LIST

Ref. No.	Part No.	Description	Index
1	120L033O1	VR-STD (VR303)	G–8
2	123L048O1	Double VR (VR302, 402)	G–7
3	123L048O2	Double VR (VR301, 401)	G–7
4	242L043O3	Lead – 6CM	L–7
5	264P198O1	Diode – LE	F–7
6	288P025O2	Motor	J –2
7	439L001O1	Squlton SW	G–1
8	443D004O1	Lug Terminal	K–5
9	443D004O2	Lug Terminal	J –4
10	449L024O2	LED Socket	G–7
11	450L008O1	Cable DIN-7P	L–7
12	459M018O1	DIN-7P Short Plug	K–6
13	460P020Q1	Head	K–4
14	521M017O1	Belt-MF	I –5
15	521M018O2	Belt-MI	J –5
16	521M019O2	Belt-FR	I –5
17	522M048O1	Motor Pulley	J –2
18	524M006O1	Flywheel	I –5
19	530M015O1	Capstan Metal	I –4
20	531M069O2	Shutter Shaft	H–2
21	540M001O1	Lead Clamper	K–5
22	556M011O2	Washer CHE	L–4
23	556M014O1	Washer CG	K–2
24	560K077O1	Bottom Base	C–3, I –7
25	570M158O1	Spring–EV–1	G–4
26	570M173O1	Spring–Shutter	H–2
27	570M176O1	Spring–EV–3	J –3
28	570M184O1	Spring–PR	L–5
29	570M185O1	Spring–EV	L–4
30	570M189O2	Spring–CG	K–2
31	570M191O2	Spring–CL	G–3
32	570M195O1	Spring–TIP	K–3
33	570M196O4	Spring–EJ	I –1
34	570M251O3	Spring–HEAD	K–4
35	570M262O1	Spring–TL	L–3
36	570M317O1	Spring–HB	L–3
37	590K174O3	Upper Cover	C–1
38	590L657O2	Holder VR	F–8
39	590M964O2	Tape Lever B	L–3
40	591M168O1	Holder E	B–3
41	591M406O1	Holder SW	G–1
42	591M448O1	Shield Case	L–8
43	591M458O1	Control Lever	G–4
44	591M474O1	Heat Sink	K–8
45	630M355O1	Shaft EV	G–3
46	630M397O1	Head Base Post	L–4
47	630M398O1	Shaft EV-2	H–2
48	640M002O6	Washer P	I –5
49	641M086O3	Cam Gear	K–2
50	641M088O1	Pinion	L–3
51	641M090O1	Bottom Cap	I –6
52	641M096O1	Pin Holder	I –4
53	641M102O1	Gear 60	J –5
54	641M103O2	Iding Gear	J –5
55	641M104O2	Pinion	J –6
56	642M062O2	Insulator Plate	G–1
57	669D058O8	Set Screw	J –2
58	670P130Q1	Nut M3 x 0.5	J –4
59	683M019O1	Washer	G–3
60	702M017O2	Side Panel	A–2, A–3
61	704M267O1	Knob EJ	A–2
62	768L025O3	Shutter	H–2
63	891L009O2	Real Rest Unit	I –5
64	891L031O3	Elevator	I –1
65	891L050O1	Main Base	I –3
66	891L051O1	Bottom Plate	I –6
67	891M037O1	Pinch Roller Unit	L–5
68	891M040O5	Head Base	K–4
69	891M041O3	Lever–EV–A	H–5
70	891M042O1	Lever–EV–B	I –3
71	891M043O5	Link	H–3
72	891M060O1	Gear Lever	L–2
73	891M062O1	Lever FF	G–3
74	943M070O4	Ejector SW ASSY	J –2
75	943M070O5	Tape Lever A ASSY	K–3
76	963L111O1	Knob	A–2
77	963L133O1	Knob	A–3
78	963L134O3	Panel	B–2
79	650P200Q5	Screw M2 x 0.4 – 5	K–4
80	650P200Q8	Screw M2 x 0.4 – 8	G–1
81	650P260Q3	Screw M2.6 x 0.45 – 3	I –4
82	651P260Q5	Screw M2.6 x 0.45 – 5	I –3
83	650P300Q4	Screw M3 x 0.5 – 4	G–1, K–5
84	650P300Q6	Screw M3 x 0.5 – 6	
85	650P300Q8	Screw M3 x 0.5 – 8	I –5
86	650P401Q2	Screw M4x0.7–12(For panel)	B–3
87	651P300Q6	Screw M3 x 0.5 – 6 (For panel)	B–3
88	669L020O4	Screw M3 x 0.5 – 6 (For cover)	E–1
89	675P200B3	Flat Rivet	K–5
90	685C002O3	Retaining Ring (E –1.5)	I –4, L–2
91	685C002O4	Retaining Ring (E–2)	G–2, K–3
92	685C002O6	Retaining Ring (E–3)	L–3, G–3, I –2
93	685C002O7	Retaining Ring (E–4)	K–2
94	685L012O1	Retaining Ring (E–3 t 0.4)	H–4, I –3
95	690H109Z9	Vinyl Tube	K–5
96	690H159Z9	Vinyl Tube	G–1
97	690H309Z9	Vinyl Tube	K–5
98	760H509Z9	Vinyl Tube	L–8
99	780H609Z9	Vinyl Tube	L–8
100	838M002O1	Lead Clamper	
101	923L545O1	PWB–NF	K–6

ELECTRICAL PARTS LIST

Ref. No.	Part No.	Description
	Resistance and Condenser	
VR303	120L033O1	Volume STD
VR302, 402	123L048O1	Double Volume
VR301, 401	123L048O2	Double Volume
CP1, 2	141P020O1	1000 PF Through Condenser
C317	181L013O1	2200μF/16V Electrolytic Condenser
C315, 415, 316	181L012O7	470μF/16V Electrolytic Condenser
C303, 403, 306, 310, 410	181P061O0	100μF/10V Electrolytic Condenser
C312, 412	181P060O9	47μF/10V Electrolytic Condenser
C305, 405, 308, 408	181P067O9	10μF/16V Electrolytic Condenser
C302, 402	181P066O1	1μF/50V Electrolytic Condenser
C307, 407	181P040O3	0.1μF/10V Electrolytic Condenser
C314, 414	172P012O9	0.15μF Polyester Condenser
C309, 409	172P011O8	0.0022μF Polyester Condenser
	Semiconductors	
IC301	266P316O1	M51521L IC
IC302	266P334O1	M51515L IC
D301	264P088O1	Diode V – 06 C
D302	264P198O1	LED 6L – 9PG2
	Transformer	
L302	351P001O5	Choke Transformer

PRINTED CIRCUIT BOARD

MODEL : GX–101EM

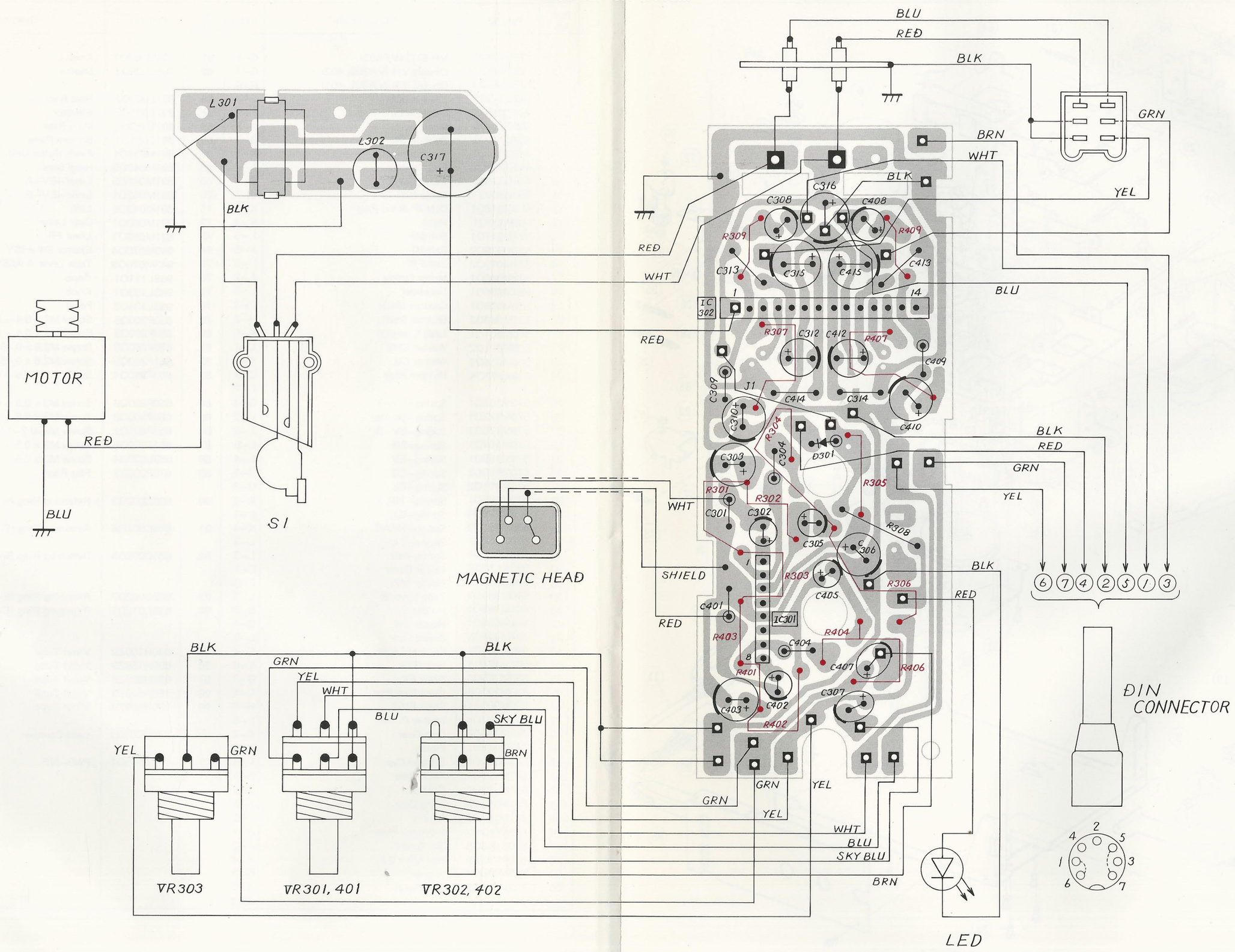

SCHEMATIC DIAGRAM

MODEL : GX–101EM

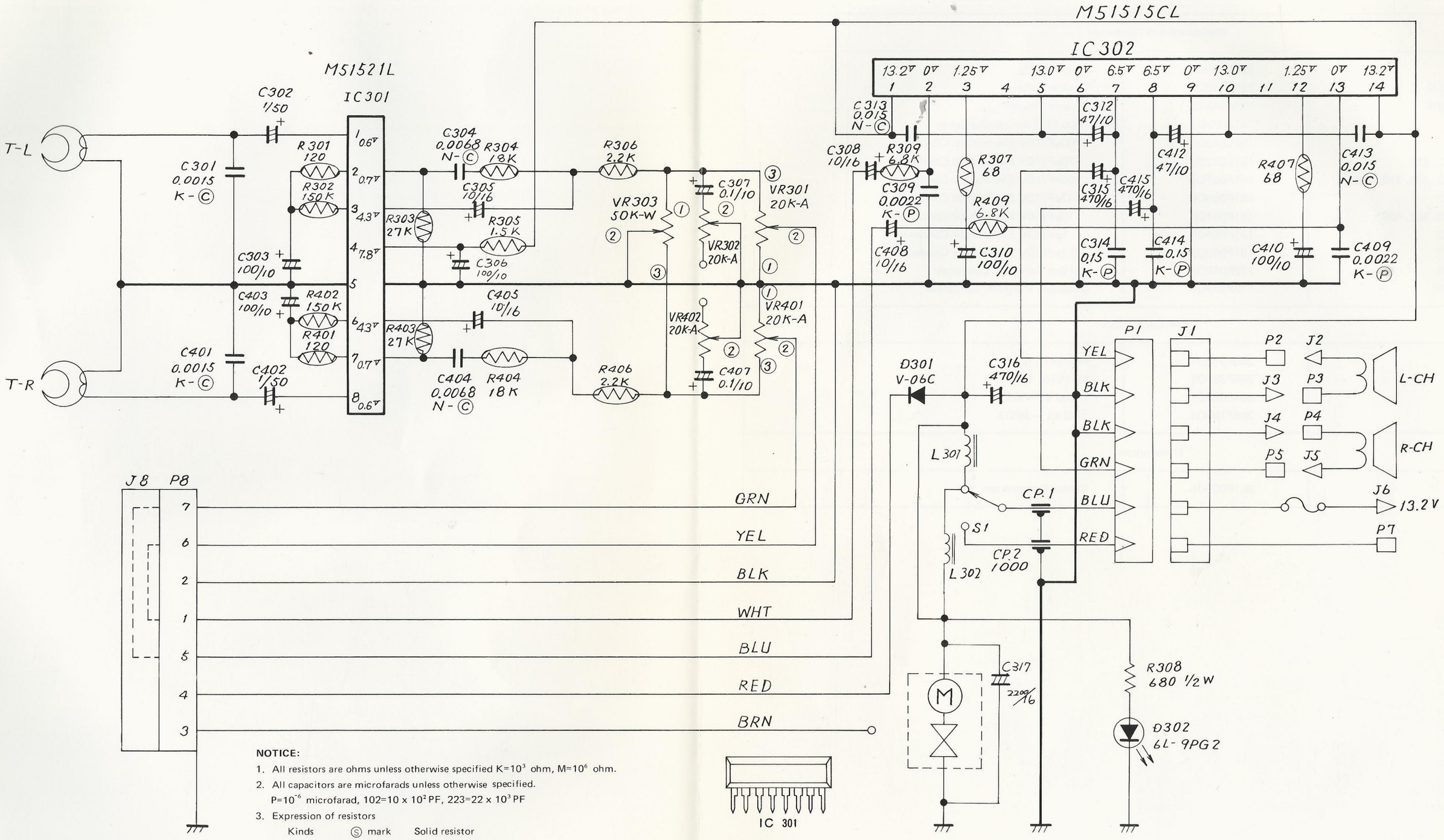

NOTICE:

1. All resistors are ohms unless otherwise specified $K=10^3$ ohm, $M=10^6$ ohm.
2. All capacitors are microfarads unless otherwise specified.
   $P=10^{-6}$ microfarad, $102=10 \times 10^2$ PF, $223=22 \times 10^3$ PF
3. Expression of resistors

Kinds	Ⓢ mark	Solid resistor
	No mark	Carbon resistor
Wattage	No indication=¼W	
Tolerance	J= ±5%, K= ±10%	

4. Expression of capacitors

Kinds	Ⓢ mark	Styrol condenser
	Ⓟ mark	Polyester film condenser
	(BC) mark	Semiconductor ceramic condenser
	No mark	Ceramic condenser
Tolerance	C=± 0.25PF,	D=± 0.5 PF, J=± 5% K=± 10%
	M=± 20% ,	Z=$^{+80}_{-20}$% No indication=$^{+100}_{-0}$ %

5. Voltages shown are at no signal is given.
6. Sypply voltage maintained at rated value for voltage readings. (13.2 V)

IC 301

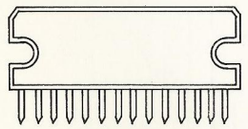

IC 302