ALIGNMENT INSTRUCTIONS

Alignment is an exacting procedure and should be undertaken only when necessary. If alignment of AM and FM is required, either section may be done first. The FM stereo section, however, should be done only when FM monaural section is sure to be properly adjusted.

Required Equipment

1. Signal generator with a frequency range of at least 455KC to 1670KC: AM
2. Signal generator with a frequency range of at least 86MC to 108.5MC: FM
3. Signal generator with a frequency range of at least 10.7MC ±0.5MC: FM
4. Vacuum tube voltmeter (AC-VTVM)
5. Sweep signal generator with a sweep range of at least 500KC and center frequency of 10.7MC with at least a 10.7MC marker. (Ext. marker may be used)
6. Oscilloscope with a wide range amplifier of appoximately 100KC.
7. Test loop, a coil of any size wire, one turn or more.
8. FM stereo signal generator.
9. Audio signal generator with a frequency range of 20% to 100KC.

Notes: Allow the set at least five minutes to warm up before attempting alignment. During alignment keep the signal generator output at the lowest level that will maintain a usable output from the set, except FM stereo signal generator.

Ground connection of signal generator..... chassis ground
Generator modulation (AM) 30%, 400%
Generator modulation (FM)..... 22.5KC
Generator modulation (FM stereo) ..... Ch. L or Ch. R 12KC

ALIGNMENT PROCEDURE

AM ALIGNMENT

Signal Generator		Dial Pointer Setting	Selector Setting	Meter Connection	Adjustment	Remarks
Connection	Frequency					
Radiated or TP-9 as small as possible	455 KC (SG or Sweep)	High end of Dial	AM	Across Output Load	T103(4IF-767) T102(4IF-766) T101(4IF-765) respectively	Volume control max. Get peak output point. Repeat 2 or 3 times.
Radiated Signal as small as possible	515 KC Modulated	Low end of Dial	AM	Across Output Load	L101(7L-054B)	Same as above.
Radiated Signal as small as possible	1650 KC Modulated	High end of Dial	AM	Across Output Load	TC4(Oscillator Trimmer)	Same as above.
Radiated Signal as small as possible	1400 KC Modulated	1400 KC	AM	Across Output Load	TC3(Tuning Trimmer)	Same as above.
Radiated Signal as small as possible	600 KC Modulated	600 KC	AM	Across Output Load	L502(4L-138A)	Same as above.

FM IF ALIGNMENT

Sweep Generator		Dial pointer Setting	Selector Setting	Scope Connection	Adjustment	Remarks
Connection	Frequency					
Thru 0.01 mfd to TP-2	10.7 MC ±500 KC	High end of Dial	FM MONO	TP-3	T122(4IF-770)	Maximum amplitude keeping 10.7MC marker centered
Thru 0.01 mfd to TP-1	10.7 MC ±500 KC High Level	High end of Dial	FM MONO	TP-3	T121(4IF-769) Secondary Winding	Same as above.
Thru 0.01 mfd to TP-1	10.7 MC ±500 KC as small as possible	High end of Dial	FM MONO	TP-3	T121(4IF-769) Primary Winding	Same as above.
FM-ANT	10.7 MC ±500 KC	High end of Dial	FM MONO	TP-3	T1(4IF-768)	Same as above.
TP-4 and FM-ANT respectively	10.7 MC ±500 KC	High end of Dial	FM MONO	TP-5	T123(4IF-771)	Adjust for maximum amplitude and symmetry of "S" curve

Note: Before proceeding with FM IF alignment detune primary winding of 4IF-771.

FM RF ALIGNMENT

Signal Generator		Dial Pointer Setting	Selector Setting	Meter Connection	Adjustment	Remarks
Connection	Frequency					
FM-ANT Terminal	86.5 MC Modulated	Low end of Dial	FM MONO	Across Output Load	L4(4L-336B)	Volume Control Max. Get peak output point. Repeat 2 or 3 times.
FM-ANT Terminal	108.5 MC Modulated	High end of Dial	FM MONO	Across Output Load	TC2(Oscillator Trimmer)	Same as above.
FM-ANT Terminal	90 MC Modulated	90 MC	FM MONO	Across Output Load	L2(4L-515C)	Same as above.
FM-ANT Terminal	106 MC Modulated	106 MC	FM MONO	Across Output Load	TC1(Tuning Trimmer)	Same as above.

FM STEREO ALIGNMENT

Signal Generator		Tuning Frequency	Selector Setting	Scope Connection	Adjustment	Remarks
Connection	Mod. Frequency					
FM-ANT	67 KC 10% Mod.	98 MC	FM auto	Across R207 5.6K ohm	L201(4L-937)	Get the minimum point.
FM-ANT	19 KC Mod. level as small as possible	98 MC	FM auto	TP-7 Sensitivity Max.	T202(4L-935) T201(4L-936) Respectively	Get the maximum point. Repeat 2 or 3 times.
FM-ANT	19 KC 10% Mod.	98 MC	FM auto	TP-6	T203(4L-934)	Get the maximum point.
Adjust the 19KC Modulation from 0 to 10% to check the on-off action of stereo indication circuit.						
FM-ANT	1000 % Ch. L only	98 MC	FM auto	Across Ch. L Output Load	T202(Readjust 4L-935)	Get the maximum output point.
Get the best adjustment point of 4L-935 repeating 2 or 3 times, together with other transformers T201 T203.						

Note: FM ST. Signal Generator output level shall be 60 dB.

CHASSIS LAYOUT

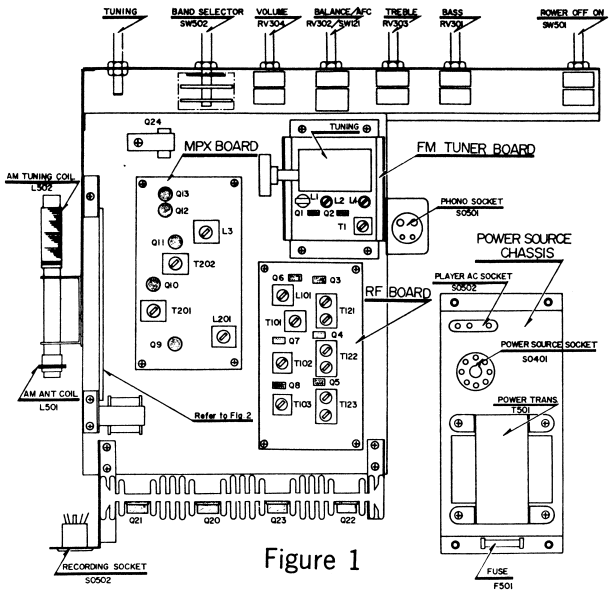

Figure 1

AF PC BOARD TOP VIEW

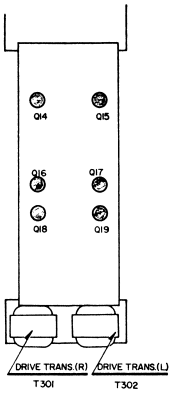

Figure 2

FM TUNER BOARD

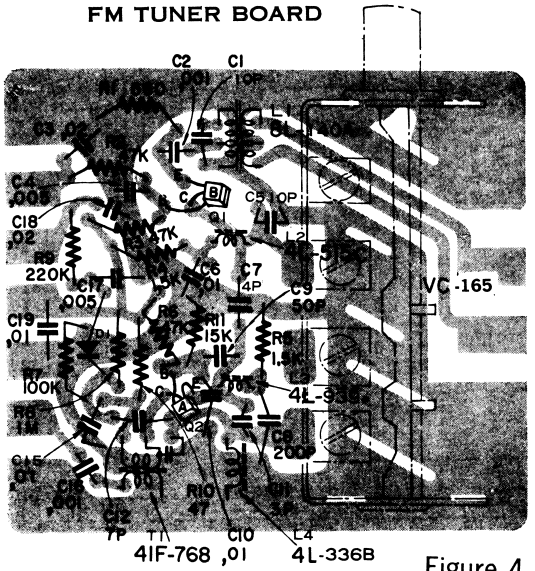

Figure 4

DIAL CORD STRINGING

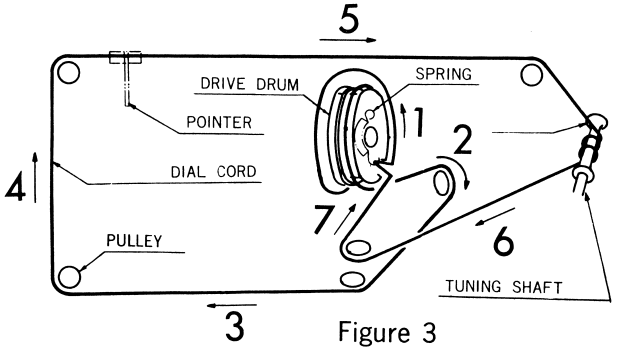

Figure 3

Notes: Tuning capacitor is positioned at maximum capacity.
Overall length of dial cord is 21 1/16".

RF BOARD

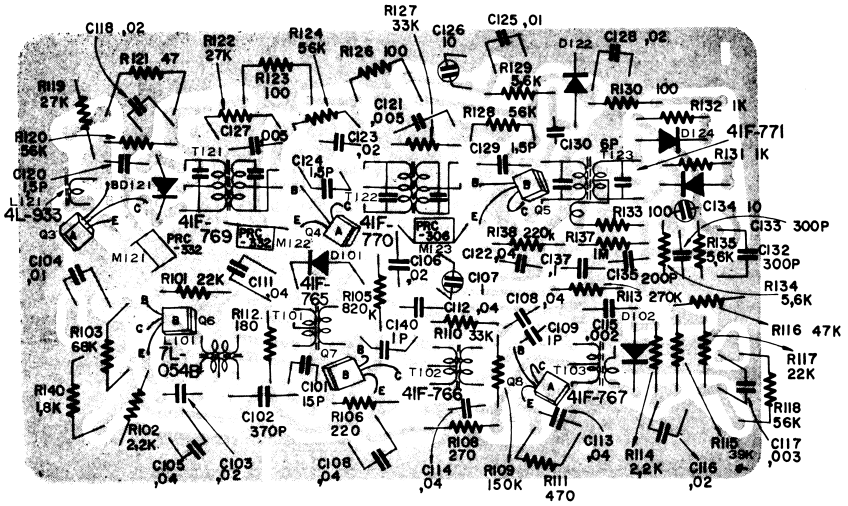

Figure 5

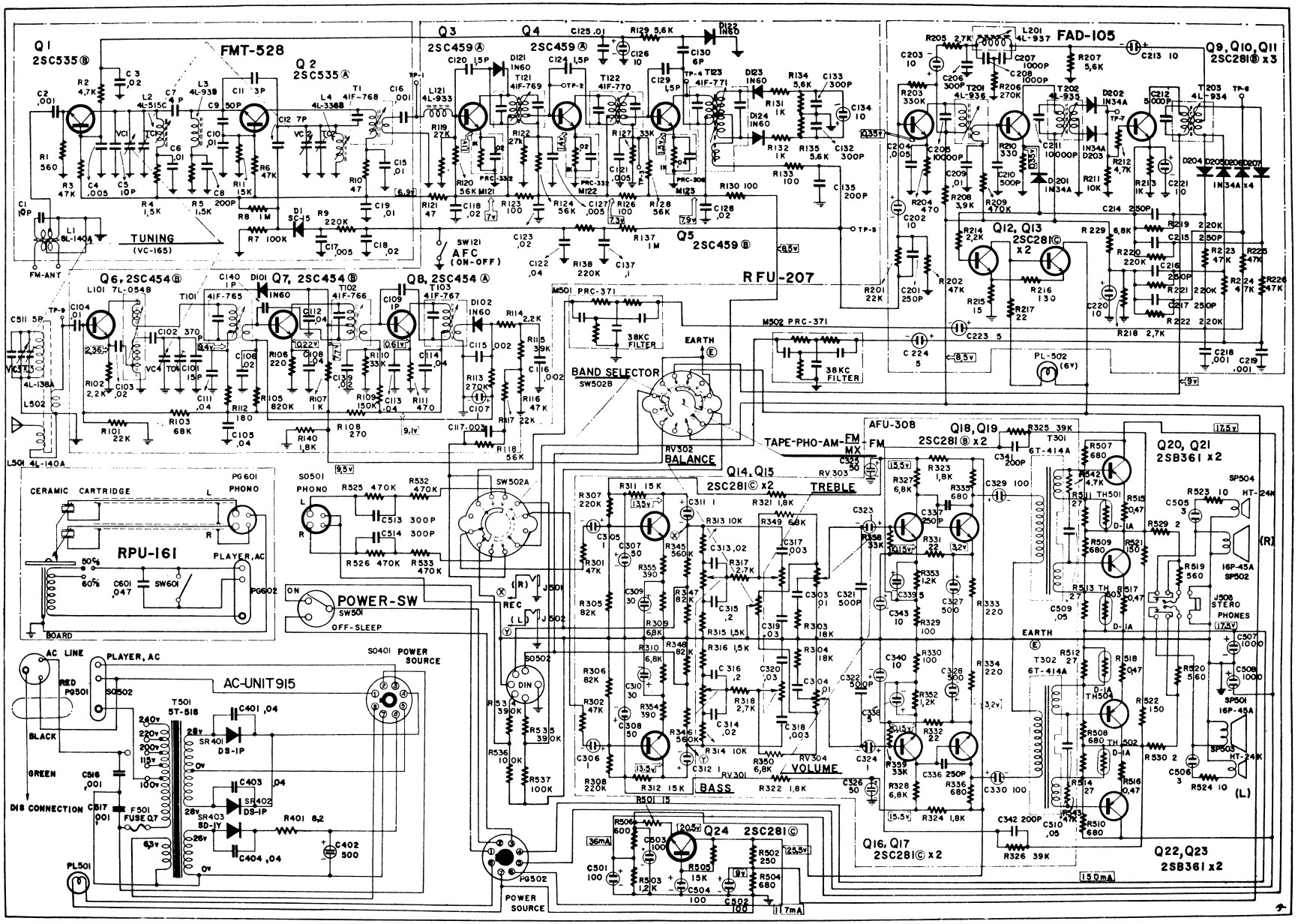
FMT-528
Q1 2SC535Ⓑ
Q2 2SC535Ⓐ
Q3 2SC459Ⓐ
Q4 2SC459Ⓐ
Q5 2SC459Ⓑ
FAD-105
Q9, Q10, Q11 2SC281Ⓑ x3
Q12, Q13 2SC281Ⓒ x2
TUNING (VC-165)
AFC (ON-OFF)
RFU-207
Q6, 2SC454Ⓑ
Q7, 2SC454Ⓑ
Q8, 2SC454Ⓐ
BAND SELECTOR
BALANCE
TREBLE
VOLUME
BASS
AFU-308
Q18, Q19 2SC281Ⓑ x2
Q14, Q15 2SC281Ⓒ x2
Q20, Q21 2SB361 x2
Q16, Q17 2SC281Ⓒ x2
Q22, Q23 2SB361 x2
Q24 2SC281Ⓒ
RPU-161
POWER-SW
AC-UNIT915
POWER SOURCE

Figure 8

AF BOARD

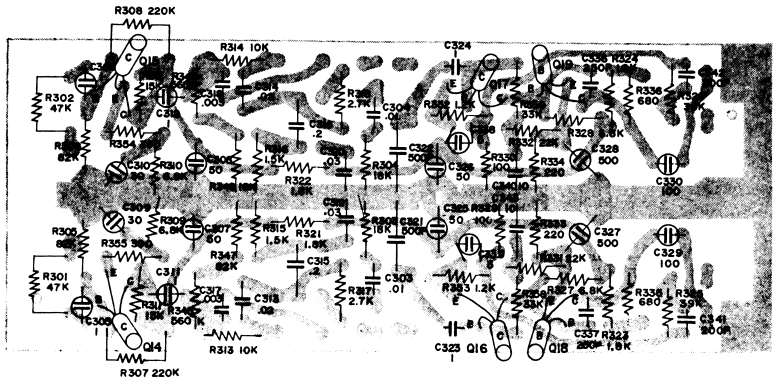

Figure 6

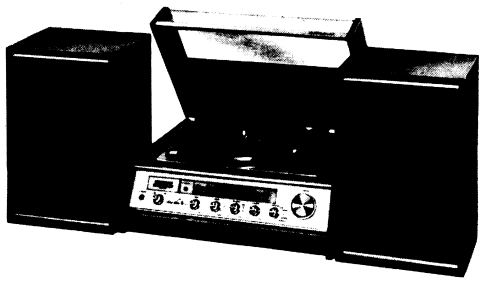

MODEL

GS-5500

MPX BOARD

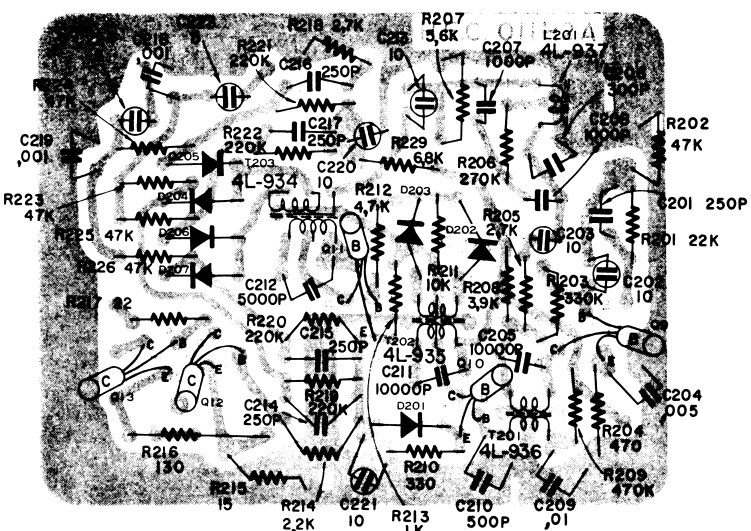

Figure 7

SPECIFICATIONS

Tuner/Amplifier

Mains Input	110/200/220/240V, 50/60 ~
Power Consumption	30 watts
Electrical Output	12W+12W Music Power
Load Impedance	8 ohms
Frequency Response	30-17,000 ~
Tuning Range	FM 88-108 MC AM 525-1605 KC
Intermediate Frequency	FM 10.7 MC AM 455 KC
FM Antenna	300 ohms balanced
Antenna Input	
FM	Built-in External Conn.
AM	Ferrite Rod & External Conn.
Oscillator Drift	AFC on FM
Terminals & Jacks	DIN Record/pb Socket, Ch. L & R, Record Jacks, Stereo Headphone Jack
Dimensions	18 5/16"(W)×8 11/16"(H)×15 15/16"(D)(including player.)
Weight	26.5 lbs (including player.)

Loudspeaker Enclosure

Power Handling Capacity	12W Music Power
Volume	18 Litres
Frequency Range	60-17,000 ~
Resonance Frequency	85 ~
Cross-over Frequency	3000 ~
Loudspeakers	16P-45A 6 1/4" Low Note Pump HT-24K 3 1/2" Horn Tweeter 2-way 4-speaker system
Dimensions	10"(W)×8 11/16"(D)×15 5/16"(H)
Weight	12 lbs.

Record Player

Type	4 speed Auto-return Stereo RPU-161
Turntable size	11" (diameter)
Motor	4-pole Synchronous Motor
Arm	Auto-return Pipe Arm
Cartridge	High Compliance Ceramic Cartridge
Stylus	Diamond Stylus
Power Switch	Automatic shut-off system
Needle Force	6 grams
Sensitivity	300 mV at 5 cm/sec. per-channel
Mains Voltage	100 volts
Mains Frequency	50/60 ~
Power Consumption	15 watts
Weight	6.2 lbs.
Dimensions	14 3/4"(W)×11 7/8"(D)×5 5/16"(H)