SANYO

All-transistor, 2-band & 3-speed, Stereophonic Portable Radio-phonograph

MODEL G-2200A

SERVICE MANUAL

SANYO ELECTRIC CO., LTD.
OSAKA, JAPAN

SPECIFICATIONS

Frequency Range ····· BC 530 - 1,605 Kc
SW 3.2 - 12 Mc
Intermediate Frequency ··· 455 Kc
Output Power ····· Maximum 1.5W
Undistorted 0.9W
Speaker ····· Two 4″×6″ permannet dynamic speakers
Voice coil impedance 8 ohms
Power Source ····· DC 9V : 6 or 9×D-size flashlight battery
Current Drain ····· No signal 35 mA(radio), 85 mA (phono)
Maximum 350 mA(radio), 400 mA(phono)
Turn Table ····· 6¾″ (171mm) dia.
Pick-up ····· Ceramic cartridge LP(ST) & SP
Phono Speed ····· 33-⅓,45 & 78 rpm

Transistors ····· 2SA223 1 × Local oscillator
2SA222 1 × Mixer
2SA202 1 × lst IF amplifier
2SA203 1 × 2nd IF amplifier
2SB185 2 × lst AF amplifier
2SB186 2 × 2nd AF amplifier
2SB272 4 × Power amplifier
Diode ····· 1S188 1 × Detetor & AGC
Sensitivity ····· BC 60μV/m for 10 mW output
SW 80 μV/m for 10 mW output
Dimensions ····· 23¼″ wide × 5¼″ deep × 14¾″ high
(590 × 132 × 374 mm)
Net Weight ····· 18.7 lbs. (8.4 kg)

ALIGNMENT PROCEDURES

(1) Apply volt-meter across the voice coil. Volume control should be at maximum position.
Output of signal generator should be no higher than necessary to obtain output reading in order to avoid AGC function.

STEP	SIGNAL GERNERATOR COUPLING	SIGNAL GENERATOR FREQUENCY	RADIO DIAL SETTING	ADJUST FOR MAXIMUM OUTPUT
IF ALIGNMENT				
1	High side through 0.1 μF capacitor to antenna stator lug on tuning gang. Low side to chassis.	455 KC	Lower end	T-3 T-2 T-1
BROADCAST RF. ALIGNMENT				
2	Fashion loop of several turns of wire and radiate signal into loop antenna.	520 KC	Lower end	L-2
3		1605 KC	Upper end	BC osc TRIM.
4		Repeat Step 2 and 3.		
5			600 KC	L-5
6			1400 KC	BC Ant. TRIM.
7		Repeat Step 5 and 6.		
SHORT WAVE RF. ALIGNMENT				
8	Fashion loop of several turns of wire and radiate signal into loop antenna.	3.2 MC	Lower end	L-2
9		12.0 MC	upper end	SW osc TRIM.
10		Repeat Step 8 and 9.		
11		4 MC	4 MC	L-4
12		11 MC	11 MC	SW Ant TRIM.
13		Repeat Step 11 and 12.		

ELECTRIC COMPONETS 1

SYMBOL No,	STOCK No,	DESCRIPTION	Q'ty
	R-S85192	Ant. coil (complete)	1
L3, L4, L5	R-W2598	Ant. coil	1
	R-35077b	Holder	2
CV-1.CV-2	R-C1528	Variable condenser	1
	R-C0030	Trimmer	2
L2 (MW)	R-W8562	Oscillation coil	1
L1(SW)	R-W8563	Oscillation coil	1
T1	R-W5T521	IF transformer	1
T3	R-W5T060	IF transformer	1
VR-2, 3	R-R124505	Variable resistor	2
VR-1	R-R124506	Variable resistor	1
T5, T4	R-W6557	Input transformer	2
PMDS	R-S6552	Speaker	2
R-CXCOO2	R-CXC002	Condenser & Resistor	1
C29, C31	R-C9074	Electrolytic condenser	2
C41, 11, 28, 33	R-C9081	〃 〃	3
C14,, 20	R-C0981	〃 〃	2
C21, 23, 28	R-C9098	〃 〃	3
C25, 26, 27 C34, 35, 36	R-C9080	〃 〃	6
	R-S6559	Pick-up (complete)	1
	R-S6554	Arm	1
	R-S6553	Cartidge	1
T2	R-W5T039	IF transformer	1
	R-S5607	Motor (complete)	1
C41, 42	R-C9534	Electrolytic condenser	2

ELECTRIC COMPONENTS 2

	R-S4543	Rotary switch	1
	R-23638	Radiation board	2
	R-23552	Holder - for radiation board	2
	R-S4542	Rest switch	1
	R-S2025b	Socket - for extra ant.	1
	R-S2113	Socket -	1
		Rug board	
		Rug	
	R-S2040	Earphone jack	2
	R-S2520	Socket	1
	R-S2521	Plug	1
	R-S1527	Rod ant.	1
	R-1170	plug - for speaker	2
	R-S8614	Plun (complete) - for extra ant.	1
	R-12011	Lug	1
	R-S3011	Lug board	1

TRANSISTOR

	Tr-1	2SA223	1
	Tr-2	2AS222	1
	Tr-3	2SA202	1
	Tr-4	2SA203	1
	Tr-5, 9	2SB185	2
	Tr-6, 10	2SB186	2
	Tr-7, 8, 11, 12	2SB272	4
	DIODE	IS188	1

RESISTORS (Carbon or Solid)

SYMBOL No.	DESCRIPTION			Q'ty
R30, 31, 35, 38	1 ohm	± 10%	¼W	4
R50, 51	22 〃	± 20%	½W	2
R26, 28, 36, 39	33 〃	± 10%	¼W	4
R4	68 〃	〃	〃	1
R25, 33	100 〃	± 20%	〃	2
R15	220 〃	〃	〃	1
R24, 40, 20, 44	390 〃	± 10%	〃	4
R10	560 〃	± 20%	〃	1
R52	8.2 〃	〃	〃	1
R21, 27, 29, 34, 37, 45	1 kilo ohm	± 10%	〃	6
R3, 6, 7, 11	1.5 〃	〃	〃	4
R16, 48	3.5 〃	〃	〃	2
R2, 9, 22, 42	4.7 〃	〃	〃	4
R19. 43	6.8 〃	〃	〃	2
R14	10 〃	〃	〃	1
R17, 47	15 〃	〃	〃	2
R23, 41	18 〃	〃	〃	2
R8	39 〃	〃	〃	1
R5	47 〃	〃	〃	1
R32, 49	120 〃	± 20%	½ or ¼W	2
R18, 46, 12, 13	100 〃	± 10%	〃	4
R1	22 〃	〃	¼W	1
R54	560 ohm	± 20%	〃	1

CAPACITORS

C5, 8, 9	Mylar (square type)	0.005 μF	± 20%	3
C13, 24, 37	〃 〃	0,003 μF	〃	3
C1	〃 〃	0,02 μF	〃	1
C10, 12, 16, 17, 19	Mylar or Ceramic (Square type)	0.04 μF	+80−20%	5
C22, 39	MP Condenser (tubular)	0.1 μF	± 20%	2
C44	Ceramic (disk type)	10 pF	± 10%	2
C6, 15	〃 〃	13 pF	〃	1
C18	〃 〃	16 pF	〃	1
C4	Styrol (tubular)	460 qF	〃	1
C3	〃 〃	500 pF	〃	1
C2	〃 〃	2100 pF	〃	1

CABINET

	R-465043a	Cabinet	1
	R-465044	Back cover	1
	R-465045	Battery cover	1
	R-465046	Lid	1
	R-465047	Speaker box	1
	R-465048a	Speaker box	1
	R-465049	Back cover - for SP pox	1
	R-465050a	Baffle board	2
	R-465051	Back cover - for SP box	1
	R-465064	Panel	2
	R-435043	Net - for front of SP box	1
	R-265297	Panel - for front of cabinet	1
	R-265238	Decoration metal-for the front of lid	1
	R-315091	Dial	1
	R-415097	SP box sash	2
	R-S1537	Lock	q
	R-115200	Lock unit	2
	R-S7502	Hinge - for battery cover	2
	R-S1538	Hinge - for lid	2
	R-115197	Fixture - for lid	2
	R-115184	Fixing metal	2
	R-325089	Pollystyrol ring - for ant. jack	1
	R-325091	Pollystyrol ring - for rod ant. jack	1
	R-445037	Rubber base	14
	R-285018	Handle fixture	2
	R-335080	Handle	1
	R-235081	Badge	1
	R-235082	Badge	1
	R-265306	Badge	1
	R-265298	Decoration metal on panel	1
	R-S1544	Fixing metal - for SP box	2
	R-115217	Fixing metal - for SP box	2
	R-275065	Badge	1
	R-265308	Decoration metal	1
	R-S1548	Hinge	2
	R-115259a	Fixture	2
	R-265416	Decoration metal	2
	R-S85152	Cabinet base	2
	R-245218	Screw	2
	R-135003	Washer	2
	B-475335	Rabel	2
	R-475337	Rabel	1
	R-265241	Panel	1
	R-325086	Rest stand	1
	R-265243	Fixing metal	1
	R-265244	Fixing metal - for baffle board	1
	R-115190	Fixing netal for baffle board	4
	R-115191a	Fixing metal	4
	R-255073	Coil spring for battery (−) terminal	4
	R-115210	Battery (+) terminal	1
	R-115211	Battery (+) terminal	2
	R-115212	Fixing metal - for battery cover	2
	R-115213	Fixing metal - for handie	2
	R-115214	Fixing metal - for rod ant.	1
	R-235079	Base metal	6
	R-475430	Printed sheet - Specificaions	1
	R-475255	Indication paper for battery	1
	R-115189	Fixing metal - for conseut	1
	R-S85124	Control Knod complefe	1
	R-325104a	Control knob	1
	R-26834	Knob decoration	1
	R-445048	Cushion - for pilot lump	1
	R-445052	Cover - for reststand	1
	R-315044	Cabinet base	3
	R-S8784	Control knobs complete	5
	R-32387	Control knobs	5
	R-26834	Knob decorations	5
	R-255043	Crip - for adaptor	1
	R-245096	Pipe - for adaptor	1
	R-325062	Adaptor	1
	R-235083	Decration metal on turn table	1
	R-355100	Pollyetiren battery cover	4
	R-445053	Rubber cover for turn table	1
	R-265245a	Decoration metal - for SP box	2

CHASSIS

	R-115186a	Chassis	1
	R-265242	Back plate	1
	R-115194	Fixing metal - for volume control	1
	R-245163	Back plate for dial	4
	R-S85105	Indication arrow (complete)	1
	R-245165	Indication arrow	1
	R-235071	Sliding rule	1
	R-415093	printed wiring board	1
	R-S85119	Shaft complete	1
	R-245182	Shaft	1
	R-245219	Bearing	1
	R-135003	"C" washer	1
	R-245183	Special screw - for battery terminal	3
	R-155012	Spring - for battery tery terminal	3
	R-115260	Fixing metal - for VC	1
	R-325017	Pully	4
	R-S8386a	Drum 9 complete)	1
	R-155014	Coil spring	1
	R-115081	Fixing metal - for coil	2
	R-44120	Cushion	3
	R-115155a	Lever	1
	R-245156	Fixing metal	1

5-20017 Printed in Japan.

Side View of Chassis

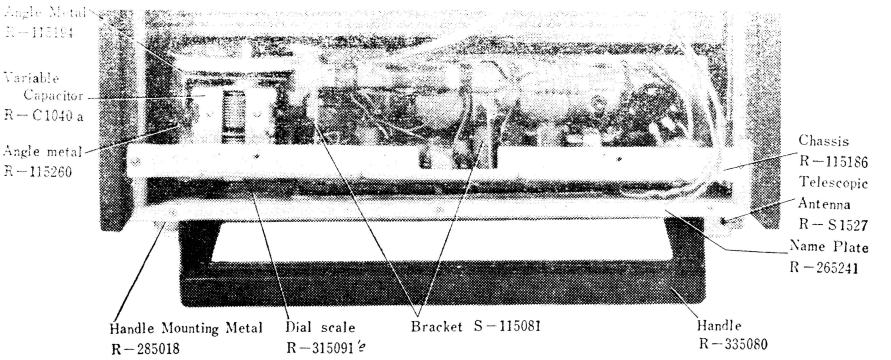

Top View of Chassis (outer part)

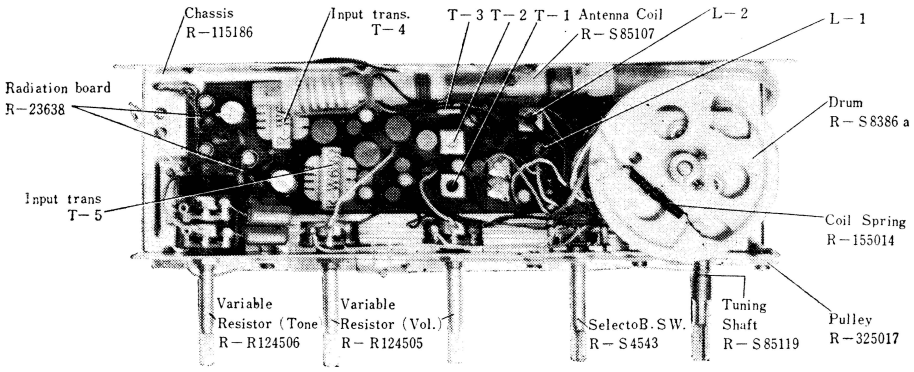

Top View of Chassis (inner part)

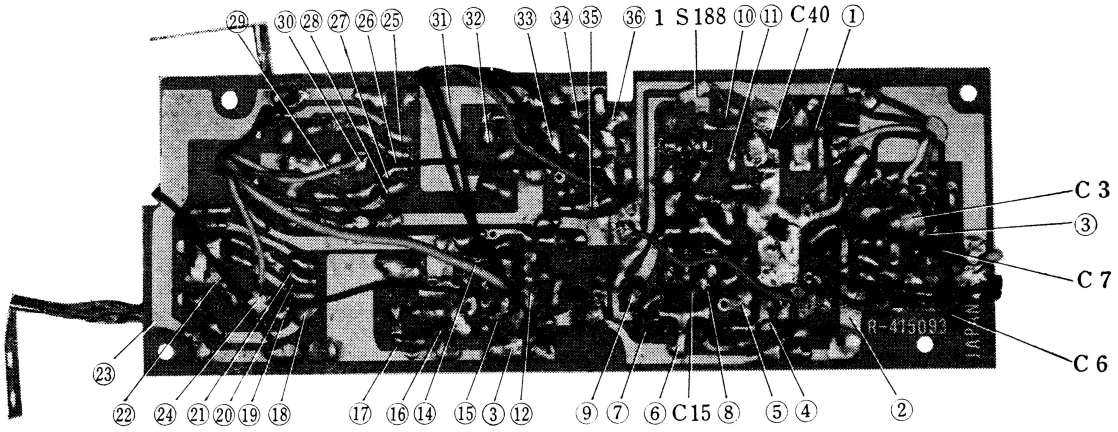

Bottom View of Chassis

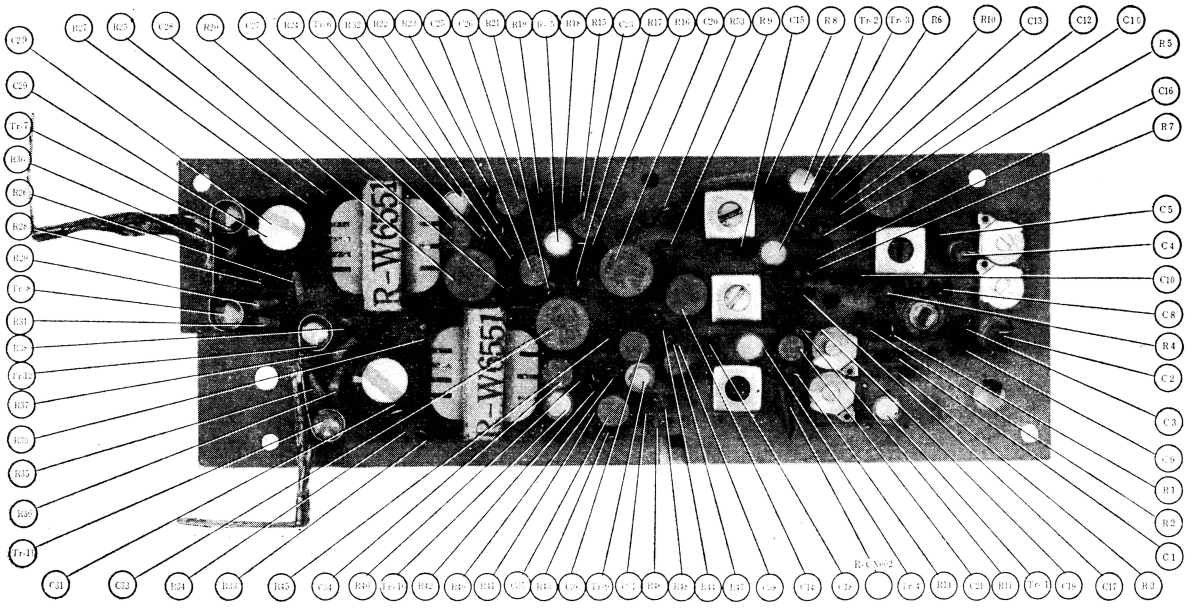

Ref. numbers are similar to that of on Circuit Diagram.

CIRCUIT DIAGRAM

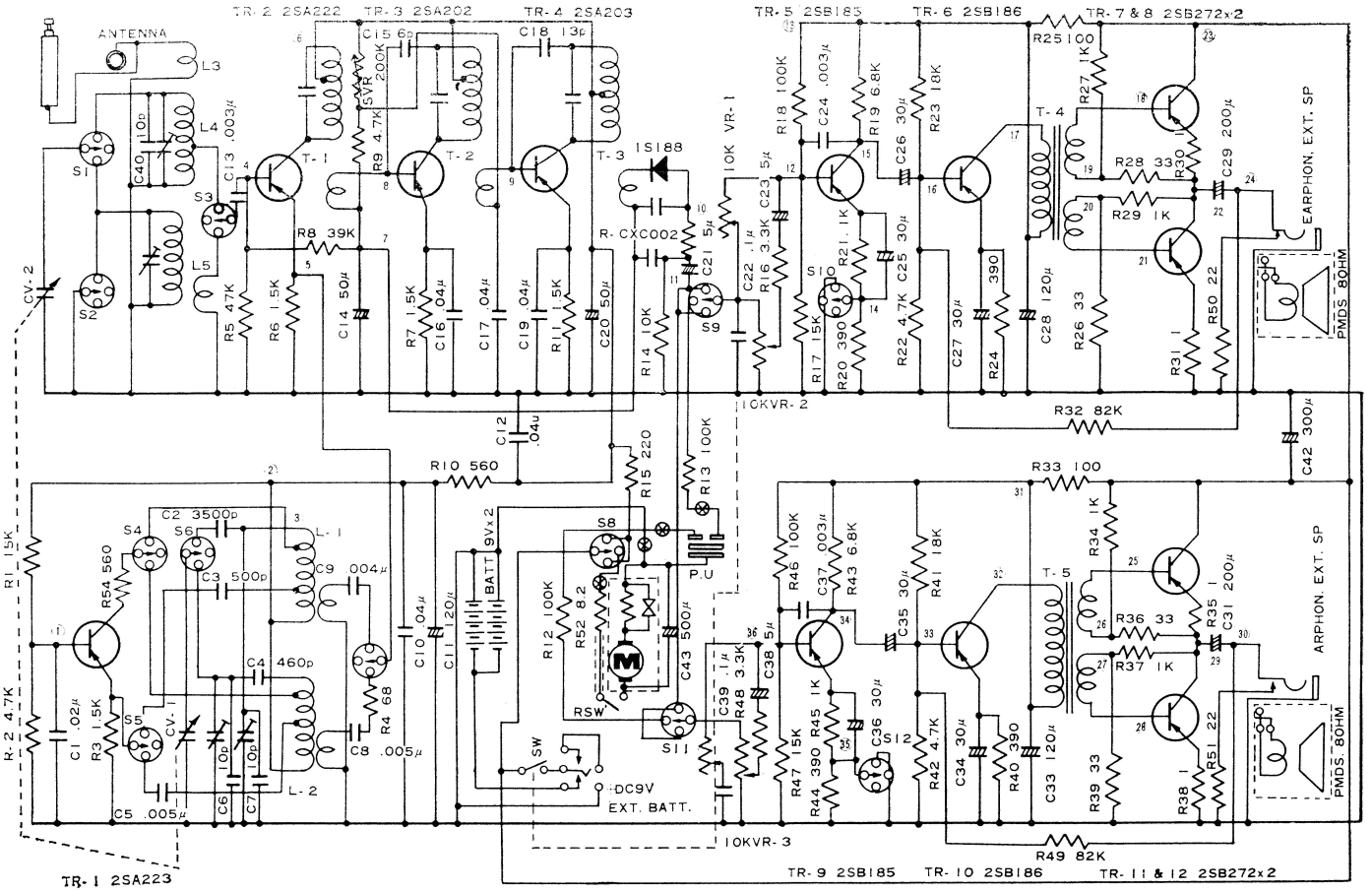

NOTE; All resistance values are in ohms. K=1000 ohms
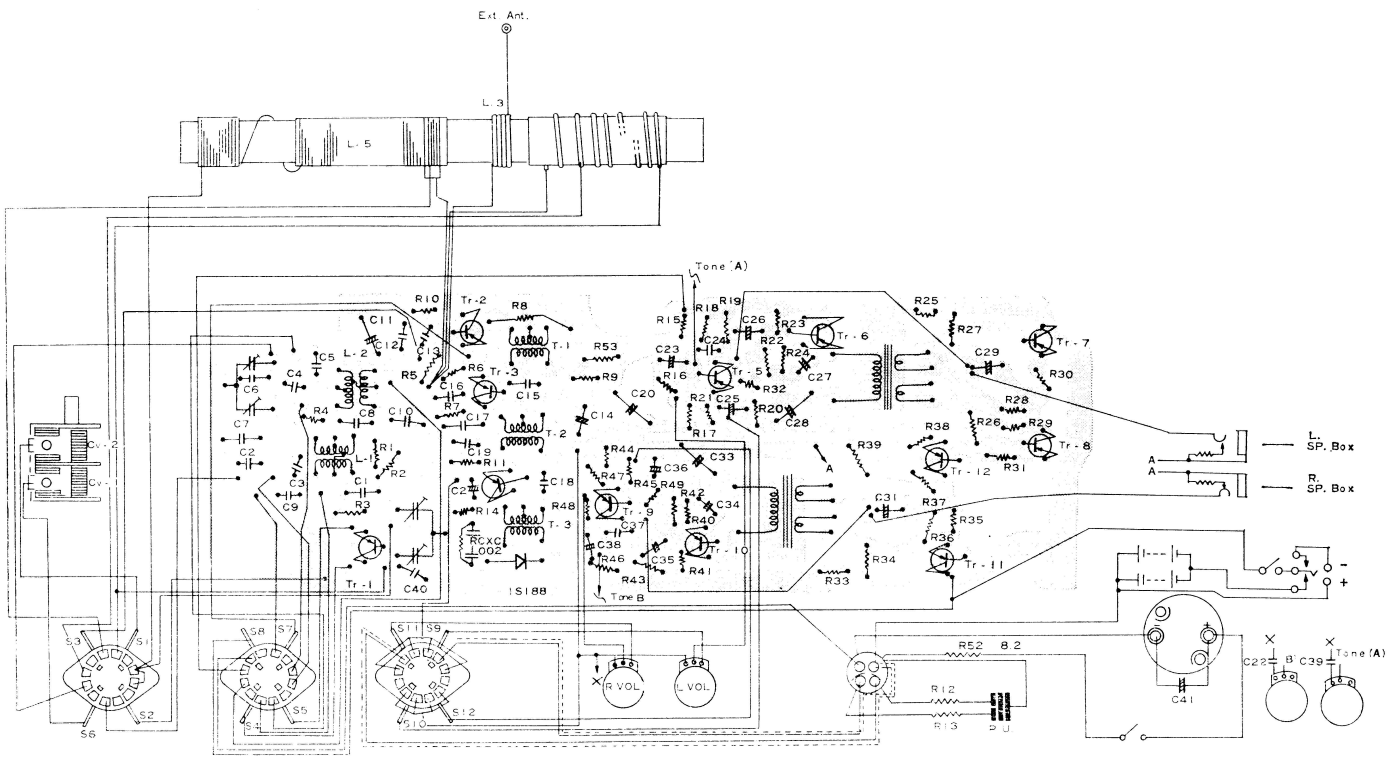
MAIN PARTS CONNECTION