SANYO

All-transistor, 1-band & 2-speed, Portable Radio-Phonograph

MODEL G-1110 SERVICE MANUAL

SANYO ELECTRIC CO., LTD.
NTERNATIONAL DIVISION : SANYO ELECTRIC TRADING CO., LTD.
OSAKA, JAPAN

SPECIFICATIONS

Frequency Range ..... BC 530–1,605 Kc
Intermediate Frequency ..... 455 Kc
Outputt Power ..... Maximum 800 mW
Undistorted 400 mW
Speaker ..... 4″ permanent dynamic speaker
Voice coil impedance 8 ohms
Power Source ..... 9V : 6 × 1½V D-size flashlight battery
Current Drain ..... No signal 15 mA (radio), 40 mA (phono)
Maximum 170 mA (radio), 210 mA (phono)
Turn Table ..... 5¾″ (142 mm) dia.
Pick-up ..... Ceramic cartridge
Phono Speed ..... 33-1/3 & 45 rpm.

Transistors ..... 2SA 323 1 × Frequency convertor
2SA 202 1 × IF amplifier
2SB 186 2 × AF amplifier
2SB 22 2× Power amplifier
Diode ..... 1S 188 1 × Detector & AGG
Thermistors ..... SDT-09 2 × Temperature compensator
Sensitivity ..... BC 160 μV/m for 10 mW output
Dimensions ..... 11¾″ wide × 7⅛″ high × 3½″ deep
(298 × 180 × 88 mm)
Net Weight ..... 4.4 lbs. (19.8 kg)

ALIGNMENT PROCEDURES

IF & RF alignment

Apply volt-meter across the voice coil.
Volume control should be at maximum position.
Output of signal generator should be no higher than necessary to obtain output reading in order to avoid AGC function.

STEP	SIGNAL GENERATOR COUPLING	SIGNAL GENERATOR FREQUENCY	RADIO DIAL SETTING	AJDUST FOR MAX. OUTPUT
IF ALIGNMENT				
1	Radiate signal through the loop antenna, which connected with signal generator output cable.	455 Kc/s	lower end	T-2 T-1
BROADCAST RF ALIGNMENT				
2	Same as step 1	510 Kc/s	lower end	L-2
3		1650 Kc/s	upper end	Cv-2 (osc.)
4		Repeat steps 2 and 3		
5		600 Kc/s	600 Kc/s	L-1
6		1400 Kc/s	1400 Kc/s	Cv-1 (ant.)
7		Repeat steps 5 and 6		

PARTS LIST

SYMBOL No.	STOCK No.	DESCRIPTION	Q'ty
Cabinet			
	R-315124	Cabinet	1
	R-245141	Insert nut	5
	R-355097	Crip	1
	R-385006	Cover	2
	R-265366	Decoration metal	1
	R-435047	Net	1
	R-265372	Badge	1
	R-426271	Spacer - for SP box	1
	R-395055	Lid	1
	R-395056	Lid	1
	R-395057	Lid	1
	R-265369	Badge	1
	R- 12080	Special nut	2
	R-115245	Fixing metal	1
	R-112546	Fixing metal	1
	R-115247	Decoration metal	1
	R-115348	Lever	1
	R-365046	Back panel	
	R-365052	Cushion	1
	R-475346	Indication paper for battery	2
	R-475356	Printed sheet-Specifications	1
	R-325062	Adaptor	1
Chassis			
	R-115249	Chassis	1
	R-415142	Printed wiring board	1
	R-115250	Fixing metal-for slide switch	1
	R-385007	Knob-for tuning	1
	R-385008	Knob-for volume control	1
	R-335081	Knob-motor	1
	R-265367	Decoration knob- for tuning and volume	2
	R-115265	Fixture	2
	R-115268	Motor sealed velt	1
	R-445054	Cushion-fo variable condenser	1
	R-425791	Washer-for tuning knob and volume cotrol shaft	1
	R-265460	Motor sealed cover	1
Speaker			
	R-S 6576	Speaker (Complete)	1
Electrical Components			
	R-S85146	Ant. coil	1
	R-W 2572	Ant. coil	1
CV-1, CV-2	R-355074	Holder-for Ant, Coil	2
	R-C 1517	Variable condenser	1
	R-C 0030	Trimmer	1
T-1	R-W 8545	Oscillation coil	1
T-2	R-W 5T564	IF transformer	1
T-3	R-W 6568	IF transformer	1
	R-S 6583	Input transformer	1
	R-S 6580	Pick-up (complete)	1
	R-S 6581	Ceramic cartridge	1
	R-S 5608	Motor (complete)	1
C9, C10, C12	R-C 9091	Eletrolytic condenser	3
C3 C8	R-C 9080	ELectrolytic condenser	2
C7	R-C 9098	Electrolytic condenser	1
VR-1	R-R116530	Volume control	1

SYMBOL No.		DESCRIPTION	Q'ty
C13	R-C 9525	Electrolytic condenser	1
	R-S 4550	Rest switch	1
	R-S 2113	Socket	1
	R-235072a	Battery terminal	2
	R-255059	Spring coil-for battery terminal	2
	R-S 4303	Slide switch	1
	R- 12011	Lug	1
	R-235010	Lugboard	1
Traneistors			
Tr-1	2SA323		1
Tr-2	2SA202		1
Tr-3,4	2SB186		2
Tr-5,6	2SB22		2
DIODE	1S188 or 1N60		1
THERMISTOR	SDT-09(SDT-09-1, SDT-09-2)		2
Capacitors (Carbon or Solid)			
470 Kilo ohm	±10%	½W or ¼W R10	1
100 〃 〃	〃	〃 R5, R8	1
56 〃 〃	〃	〃 R20	2
10 〃 〃	〃	〃 R6, R11	2
6.8 〃 〃	〃	〃 R1	1
1.8 〃 〃	〃	〃 R3, R15, R17	3
1 〃 〃	〃	〃 R9	1
680 Ohm	〃	〃 R12	1
560 〃	〃	〃 R7	1
470 〃	〃	〃 R4	1
100 〃	〃	〃 R13	1
10 〃	±20%	〃 R21	1
12 Kilo ohm	±20%	¼W R22	1
82 〃 〃	〃	½W or ¼W R2	1
150 Ohm	〃	〃 R14,R16	2
Resistors			
C11	Mylar (Squre type)	0.003 μF ±20% 50V	1
C1 C2	〃 〃	0.004 μF 〃 〃	2
C6	〃 〃	0.02 μF 〃 〃	1
C4	Ceramic (Circle type)	10 pF ±10% 〃	1
C5	Mylar or Cera mic (Circle)	0.04 μF +10% −20% 〃	2
C14	Mylar (Circle type)	0.04 〃 ±20% 〃	1

5-20016 Printed in Japan

MAIN PARTS LOCATIONS

Top view of cabinet

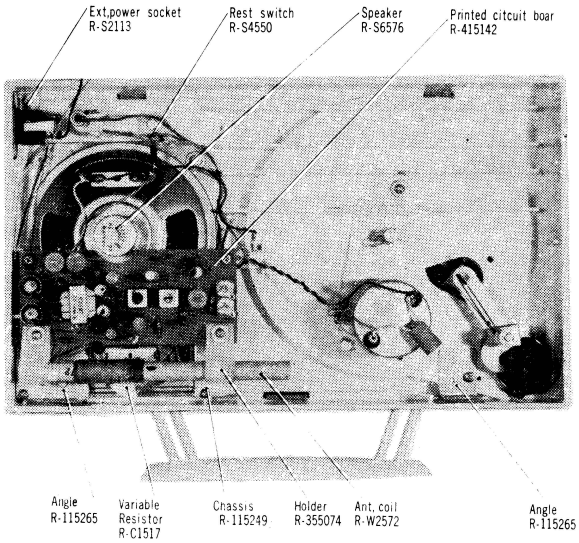

Top view of chassis

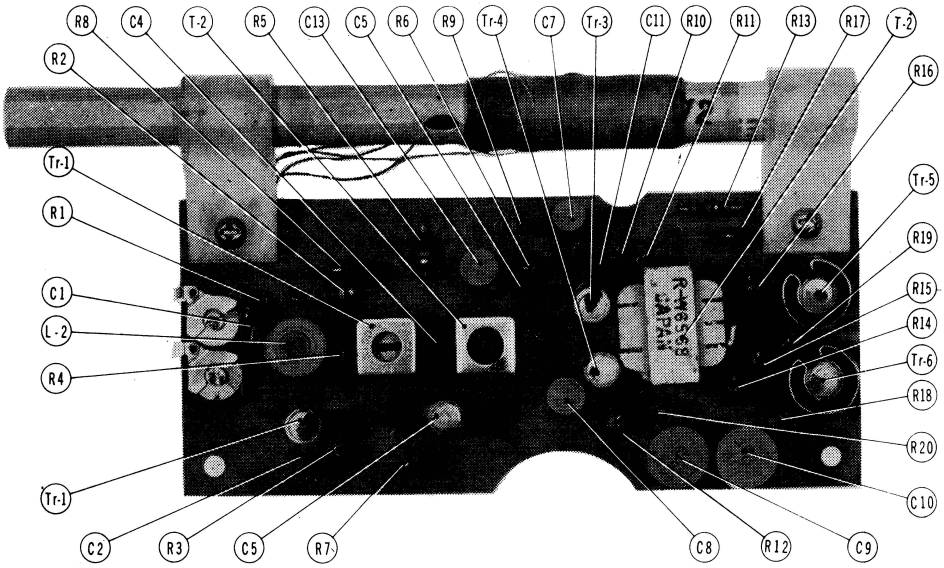

Bottom veiw of chassis

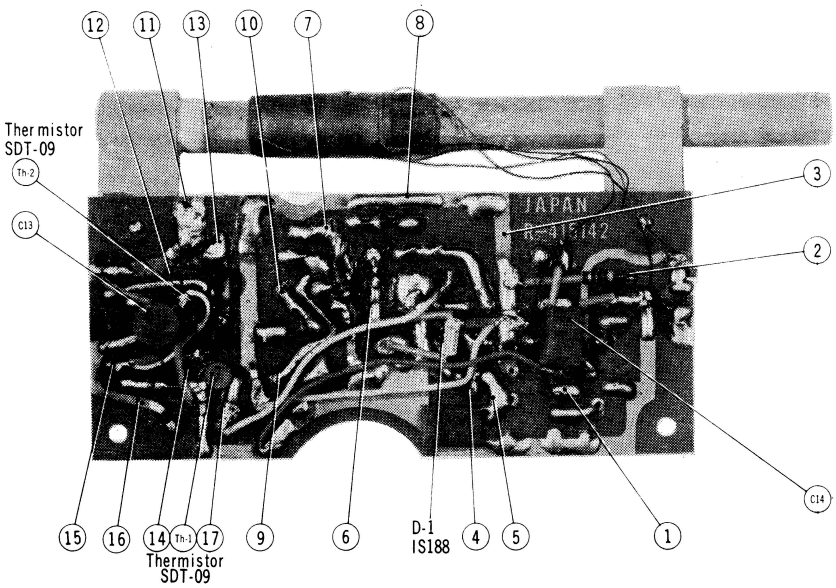

Ref. Numbers are same as on the circuit diagrams.

CIRCUIT DIAGRAMS

G-1110 BLOCK DIAGRAM

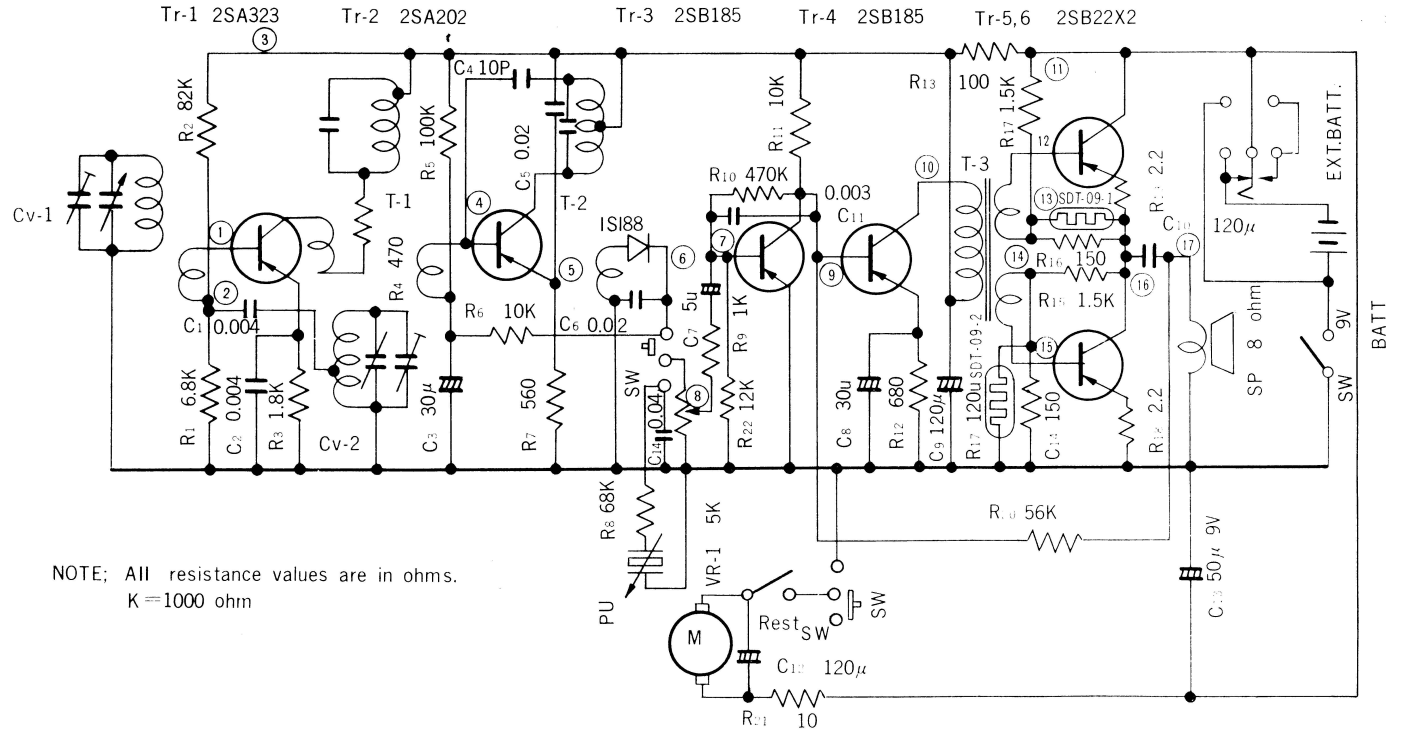

NOTE; All resistance values are in ohms.
K=1000 ohm
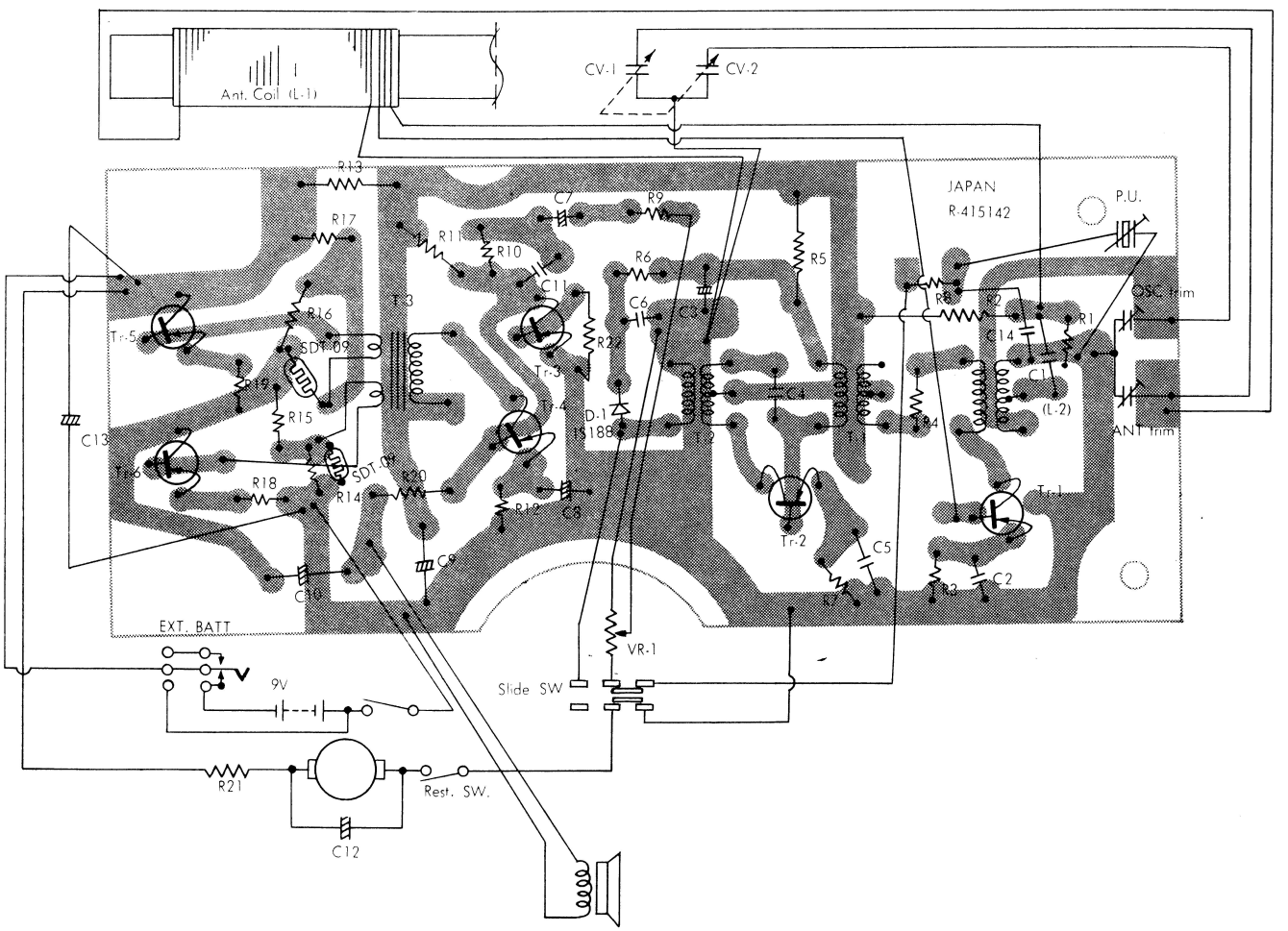
MAIN PARTS CONNECTIONS