SANYO

Solid - State Stereo/OTTO

MODEL DC-37N

SERVICE MANUAL

SANYO ELECTRIC CO., LTD.
INTERNATIONAL DIVISION: SANYO ELECTRIC TRADING CO., LTD.
OSAKA, JAPAN

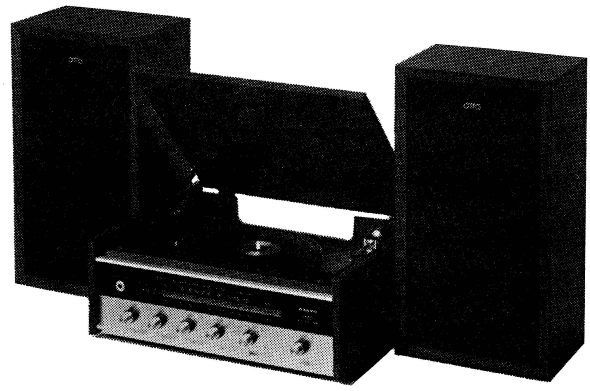

SPECIFICATIONS

Circuitry ····· 1 FET, 18 transistors, 13 diodes, MW/SW/FM/FM Stereo Tuner/Amplifier

FET ····· 2SK25×1

Transistors ····· 2SC772×6, 2SC537×2
2SB186×4, 2SB303×2
2SB474×4

Diodes ····· 1S553×1, 1S188×9
DS-410×1, 10D1×2

Tuning range ····· SW 3.9 - 12 MHz
MW 535 - 1,605 KHz
FM 88 - 108 MHz

Output power ····· 8W×2 (M.P.O. max.)
4W×2 (C.P.O. 10% distortion)

Frequency response ····· 45 - 26,000 Hz

Speakers ····· 6-¼″ (16 cm) double cone type×2

Turntable speeds ····· 33-⅓, 45, 78 rpm

Turntable ····· 7-⅞″ (20 cm) dia.

Pickup ····· Ceramic stereo cartridge with sapphire stylus.

Power source ····· 100, 120, 135, 150, 210, 240 V, 50/60 Hz

Power consumption ····· 14 W

Dimensions ····· Center unit:
16-¾″ (W)×14-⅜″ (D)×6-¼″ (H)
(424×365×158 mm)
Speaker cabinet:
9-⅝″ (W)×6-⅞″ (D×17-¼″ (H)
(244×173×439 mm)

Weight ····· Center unit: 16 lbs. 9 ozs. (7.5 kg)
Speaker cabinet: 8 lbs. 4 ozs. (3.5 kg)×2

DIAL CORD STRINGING

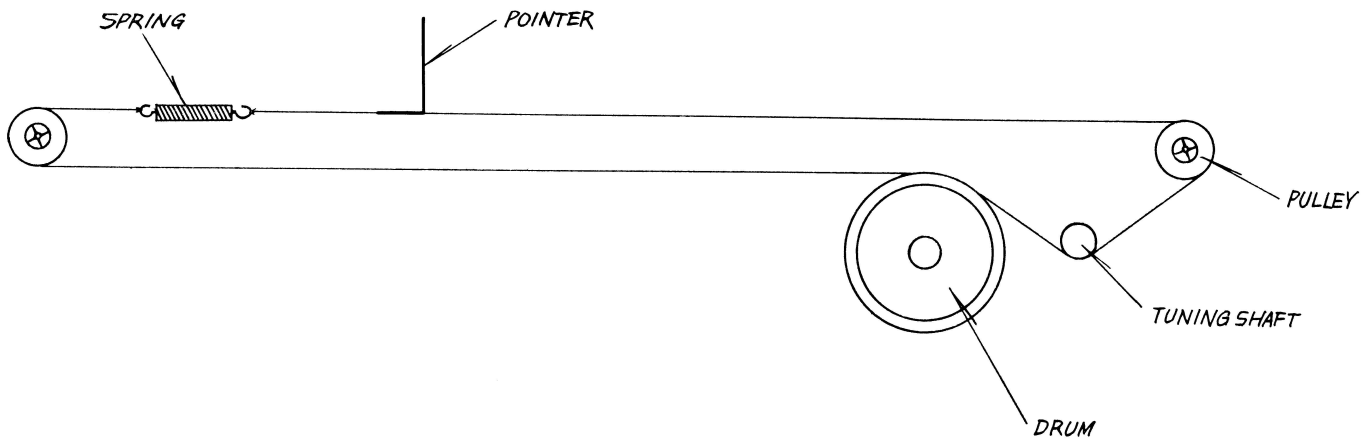

CIRCUIT DIAGRAM

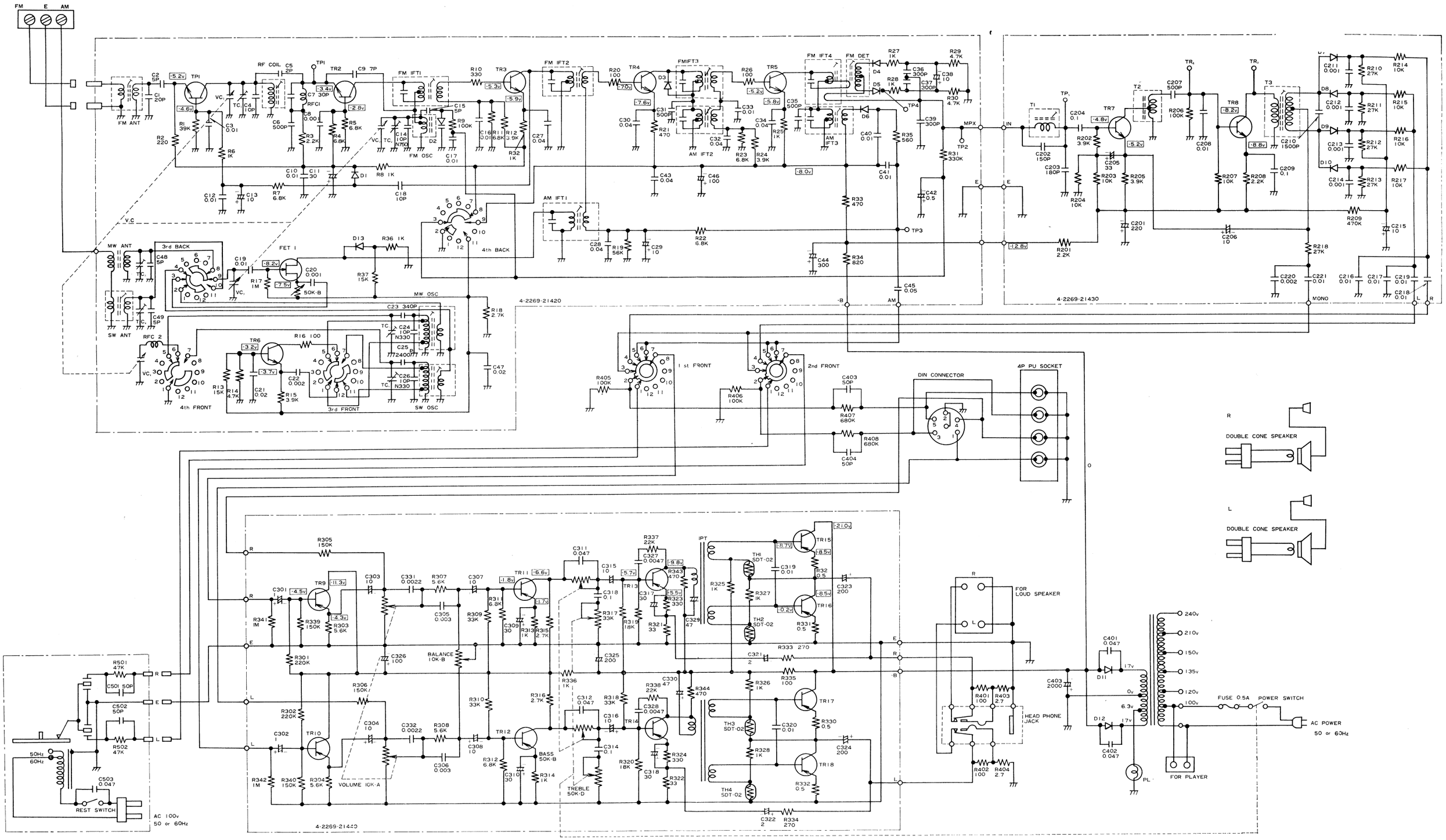

TRANSISTOR.DIODE

FET 1	.	2SK25	D1	.	1S188
TR1 – TR6	.	2SC772	D2	.	1S553
TR7 TR8	.	2SC537	D3	.	DS-410
TR9 TR10	.	2SB303	D4 – D10	.	1S188
TR11 – TR14	.	2SB186	D11 D12	.	1001
TR15 – TR18	.	2SB474	D13	.	1S188

Printed in Japan

PARTS LIST

Ref. No.	Part No.	Description	Q'ty
MPX PCB Section			
*3	1310-4001-13700	PCB Assy-MPX Circuit	1
	4-2269-21430	Printed Circuit Board	1
T1	4-2659-20040	Multiplex Coil SCA	1
T2	4-2659-20090	Multiplex Coil 19KHz	1
T3	4-2659-20030	Multiplex Coil 38KHz	1
TR7, 8		Transistor-2SC537	2
D7, 8, 9, 10		Diode-1S188	4
Resistors			
R201, 208	Carbon ELR, 2.2 Kohm, ±10%, ¼W		2
R202, 205	Carbon ELR, 3.9 Kohm, ±10%, ¼W		2
R203, 204, 207, 214, 215, 216, 217	Carbon ELR, 10 Kohm, ±10%, ¼W		7
R210, 211, 212, 213, 218	Carbon ELR, 27 Kohm, ±10%, ¼W		5
R206	Carbon ELR, 100 Kohm, ±10%, ¼W		1
R209	Carbon ELR, 470 Kohm, ±10%, ¼W		1
Capacitors			
C201	Electrolytic, 220μF, −10%−+100%, 16WV		1
C205	Electrolytic, 33μF, −10%−+100%, 10VW		1
C206, 215	Electrolytic, 10μF, −10%−+100%, 10WV		2
C204, 215	Mylar, 0.1μF, ±20%, 50WV		2
C208, 216, 217, 218, 219, 221	Mylar, 0.01μF, ±20%, 50WV		6
C220	Mylar, 0.002μF, ±20%, 50WV		1
C211, 212, 213, 214	Mylar, 0.001μF, ±20%, 50WV		4
C207, 210	Plastic Film, 1,500μμF, ±10%, 35WV		2
C202	Plastic Film, 150μμF, ±20%, 50WV		1
C203	Plastic Film, 180μμF, ±20%, 50WV		1

RF PCB

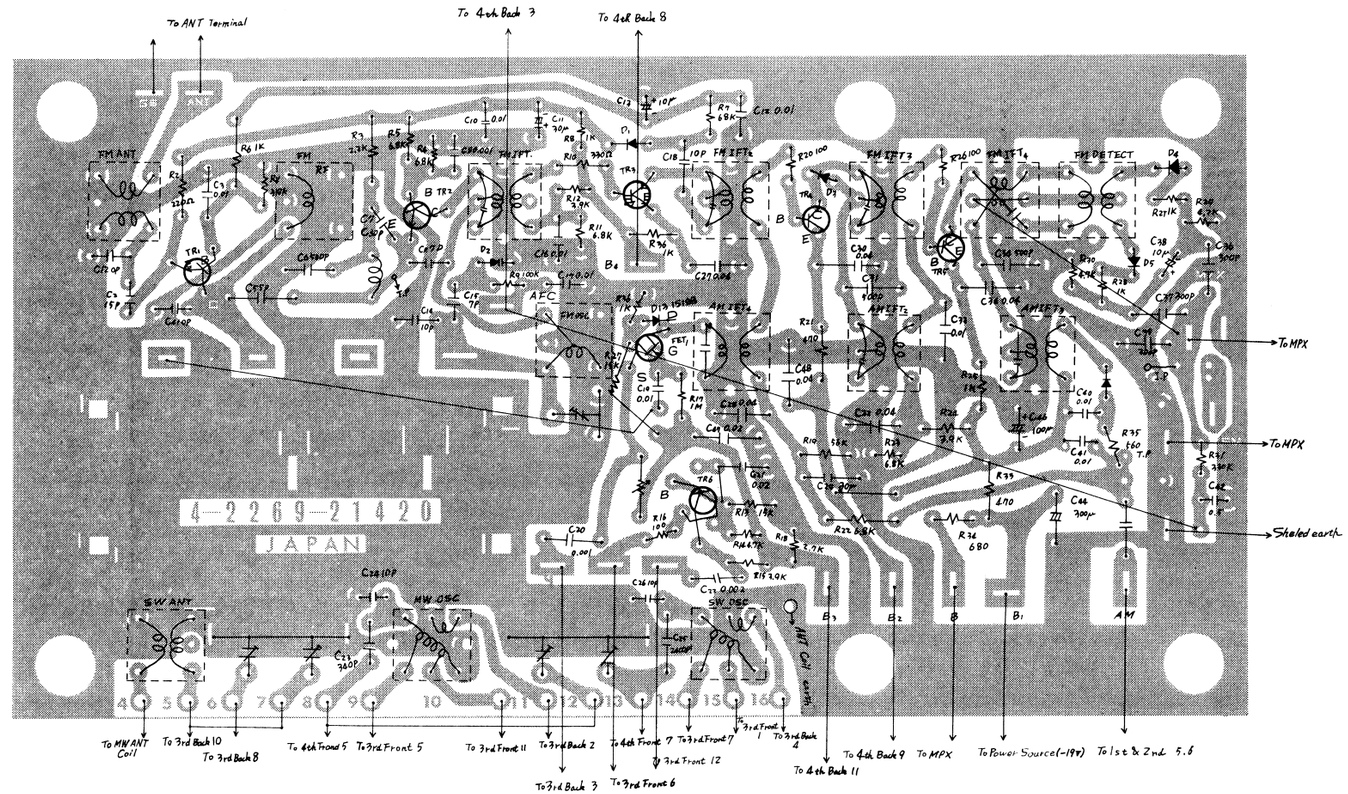

MPX PCB

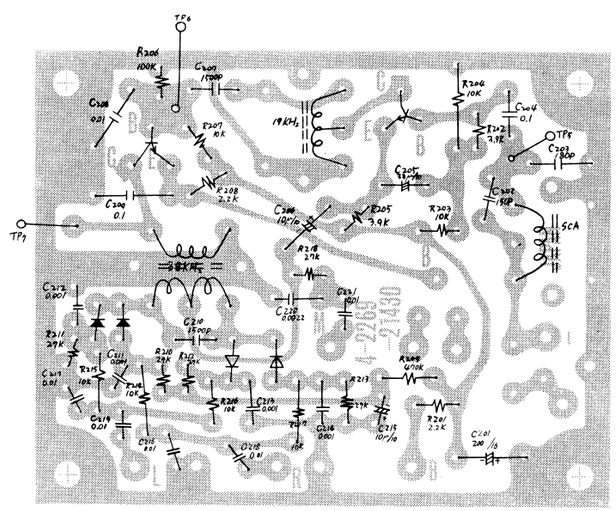

AF PCB

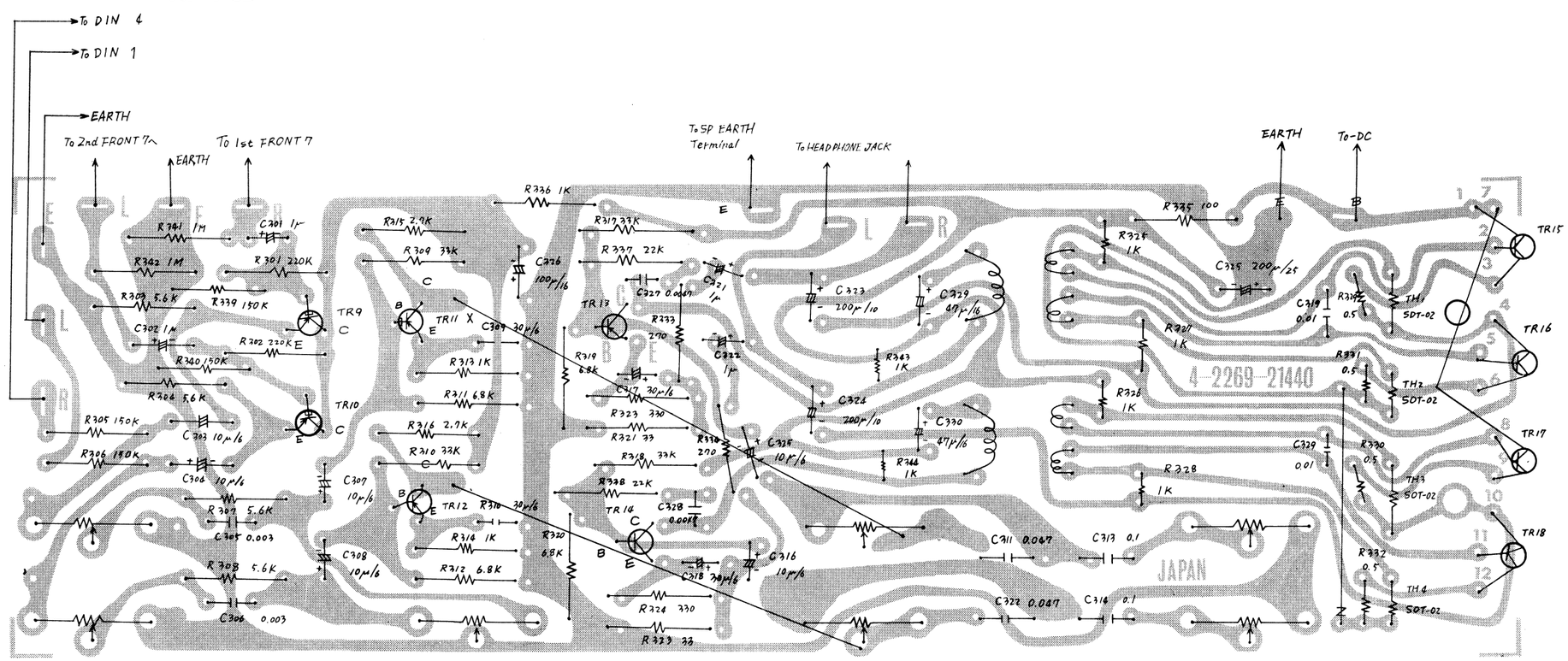

Ref. No.	Part No.	Description	Q'ty
AF PCB Section			
*1	1310-4001-13800	PCB Assy-AF circuit	1
	4-2269-21440	Printed Circuit Board	1
	4-2229-21500	VR-VOLUME,A-10 Kohm×2	1
	4-2229-21520	VR-BASS, B-50 Kohm×2	1
	4-2229-21530	VR-TREBLE, D-50 Kohm×2	1
	4-2229-21520	VR-BALANCE, B-10 Kohm×1	1
	4-2549-20261	Input Trans	2
	4-2379-20630	Terminal Tab	11
TR15, 16, 17, 18		Transistor-2SB474	4
TR11, 12, 13, 14		Transistor-2SB186	4
TR9, 10		Transistor-2SB303	2
TR1, 2, 3, 4		Thermister-SDT-02	4
Resistors			
R329, 330, 331, 332	Wire Wound, 0.5 ohm, ±10%, ½W		4
R321, 322	Carbon R, 33 ohm, ±10%, ¼W		2
R323, 324	Carbon R, 330 ohm, ±10%, ¼W		2
R335	Carbon R, 100 ohm, ±10%, ½W		1
R333, 334	Carbon R, 270 ohm, ±10%, ¼W		2
R325, 326, 327, 328	Carbon ELR, 1 Kohm, ±10%, ¼W		4
R313, 314, 336	Carbon R, 1 Kohm, ±10%, ¼W		3
R315, 316	Carbon R, 2.7 Kohm, ±10%, ¼W		2
R311, 312	Carbon R, 6.8 Kohm, ±10%, ¼W		2
R307, 308	Carbon R, 5.6 Kohm, ±10%, ¼W		2
R309, 310, 317, 318	Carbon R, 33 Kohm, ±10%, ¼W		4
R305, 306, 339, 340	Carbon R, 150 Kohm, ±10%, ¼W		4
R337, 338	Carbon R, 22 Kohm, ±10%, ¼W		2
R303, 304	Carbon R, 5.6 Kohm, ±10%, ¼W		2
R301, 302	Carbon R, 220 Kohm, ±10%, ¼W		2
R341, 342	Carbon R, 1 Megohm, ±10%, ¼W		2
R343, 344	Carbon R, 470 ohm, ±10%, ¼W		2
R319, 320	Carbon R, 18 Kohm, ±10%, ¼W		2
Capacitors			
C323, 324	Electrolytic, 220μF, −10% −+100%, 16WV		2
C325	Electrolytic, 220μF, −10% −+100%, 25WV		1
C326	Electrolytic, 220μF, −10% −+100%, 20WV		1
C303, 304, 307, 308, 315, 316	Electrolytic, 10μF, −10% −+100%, 10WV		6
C309, 310, 317, 318	Electrolytic, 33μF, −10% −+100%, 6WV		4
C301, 302	Electrolytic, 1μF, −10% −+100%, 50WV		2
C313, 314	Mylar, 0.1μF, ±20%, 50WV		2
C311, 312	Mylar, 0.047μF, ±20%, 50WV		2
C319, 320, 327, 328	Mylar, 0.0047μF, ±20%, 50WV		4
C305, 306	Mylar. 0.003μF, ±20%, 50WV		2
C329, 330	Electrolytic, 47μF, −10% −+100%, 16WV		2
C319, 320	Mylar, 0.01μF, ±20%, 50WV		2
C321, 322	Electrolytic, 2μF, −10% −+100%, 50WV		2
C331, 332	Mylar, 0.0022μF, ±20%, 50WV		2
RF PCB Section			
*2	1310-4001-13600	PCB Assy-RF Circuit	1
	4-2269-21420	Printed Circuit Board	1
	4-2249-20350	Variable Capacitor	1
	4-2579-20740	Antenna Coil FM	1
	4-2599-20220	RF Coil	1
	4-2589-20560	OSC Coil FM	1
	4-2539-20090	IF Trap Coil	1
	4-2569-20670	IF Trans FM-IFT FM 1st	1
	4-2569-20680	IF Trans FM-IFT FM 2nd	1
	4-2569-20690	IF Trans FM-IFT FM 3rd	1
	4-2569-20700	IF Trans FM-IFT FM Det 1st	1
	4-2569-20710	IF Trans FM-IFT FM Det 2nd	1

Ref. No.	Part No.	Description	Q'ty
RF PCB Section			
	4-2249-20310	Trimmer Capacitor	1
	4-2589-20580	OSC Coil SW	1
	4-2589-20570	OSC Coil MW	1
	4-2229-21480	VR 50 Kohm, b-Type, 2SK25	1
	4-2569-20750	IF Trans AM-IFT AM 1st	1
	4-2569-20730	IF Trans AM-IFT AM 2nd	1
	4-2569-20740	IF Trans AM-IFT AM Det	1
	4-2249-20360	Trimmer Capacitor	1
	4-2579-20760	Antenna Coil SW	1
	4-2379-20630	Terminal Tab	13
TR1, 3, 4, 5		Transistor-2SC772	4
TR6, 2		Transistor-2SC772	2
FET1		Field Effect Transistor-2SK25	1
D1, 4, 5, 6, 13		Diode-1S188	5
D2		Diode-1S553	1
D3		Diode-DS410	1
D14		Diode-1S188	1
Resistors			
R2	Carbon R, 220 ohm, ±10%, ¼W		1
R6, 8, 25, 27, 28, 32, 36	Carbon R, 1 Kohm, ±10%, ¼W		7
R1	Carbon R, 39 Kohm, ±10%, ¼W		1
R3	Carbon R, 2.2 Kohm, ±10%, ¼W		1
R4, 5, 7, 11, 22, 23	Carbon R, 6.8 Kohm, ±10%, ¼W		6
R12, 15, 24	Carbon R, 3.9 Kohm, ±10%, ¼W		3
R10	Carbon R, 330 ohm, ±10%, ¼W		1
R9	Carbon R, 100 Kohm, ±10%, ¼W		1
R16, 20, 26	Carbon R, 100 ohm, ±10%, ¼W		3
R14, 29, 30	Carbon R, 4.7 Kohm, ±10%, ¼W		3
R31	Carbon R, 330 Kohm, ±10%, ¼W		1
R35	Carbon R, 560 ohm, ±10%, ¼W		1
R21, 33	Carbon R, 470 ohm, ±10%, ¼W		2
R34	Carbon R, 820 ohm, ±10%, ¼W		1
R19	Carbon R, 56 Kohm, ±10%, ¼W		1
R13	Carbon R, 15 Kohm, ±10%, ¼W		1
R37	Carbon R, 15 Kohm, ±10%, ¼W		1
R17, 38	Carbon ELR, 10 Kohm, ±10%, ¼W		2
R18	Carbon ELR, 1 Megohm, ±10%, ¼W		1
R37	Carbon ELR, 2.7 Kohm, ±10%, ¼W		1
Capacitors			
C36, 37, 39	Ceramic, 300μμF, ±10%, 50WV		3
C27, 28, 34, 30, 32, 43	Ceramic, 0.04μF, −20%~−80%, 25WV		6
C21, 47	Ceramic, 0.02μF, −20%~−80%, 50WV		2
C6, 31, 35	Ceramic, 500μμF, ±10%, 50WV		3
C3, 10, 17, 19, 12, 16, 40, 41	Ceramic, 0.01μF, ±20%, 25WV		8
C8, 20	Ceramic, 0.001μF, −20%~−80%, 50WV		2
C1	Ceramic, 20μμF, ±10%, 50WV		1
C2, 48, 49, 15	Ceramic, 5μμF, ±10%, 50WV		4
C4, 18	Ceramic, 10μμF, ±10%, 50WV		2
C5	Ceramic, 2μμF, ±10%, 50WV		1
C7	Ceramic, 30μμF, ±10%, 50WV		1
C9	Ceramic, 7μμF, ±10%, 50WV		1
C22	Ceramic, 0.002μF, ±10%, 50WV		1
C23	Plastic Film, 340μμF, ±5%, 50WV		1
C25	Plastic Film, 2400μμF, ±5%, 50WV		1
C33	Ceramic, 10,000μμF, ±10%, 50WV		1
C14	Ceramic, 10μμF, ±10%, 50WV		1
C26	Ceramic, 10μμF, ±10%, 50WV		1
C24	Ceramic, 10μμF, ±10%, 50WV		1
C45	Ceramic, 0.05μF, ±10%, 50WV		1
C50	Electrolytic, 10μF, −10%−+100%, 10WV		1
C11	Electrolytic, 33μF, −10%−+100%, 10WV		1
C13, 29, 38	Electrolytic, 10μF, −10%−+100%, 10WV		3
C44	Electrolytic, 300μF, −10%−+100%, 25WV		1
C46	Electrolytic, 10μF, −10%−+100%, 10WV		1
C42	Aluminum Solid, 0.5μF, ±10%, 10WV		1

PARTS LIST

Ref. No.	Part No.	Description	Q'ty
		Cabinet Section	
	1310-1101-00900	-Cabinet Assy	1
6	1312-1118-10200	-Plate Side-Left	1
7	1312-1118-10300	-Plate Side-Right	1
3	1312-1102-19400	-Rear Cover	1
1	1312-1107-13300	-Lid	1
	1312-1304-10400	-Mark Transfer	1
2	1310-2001-11500	-Support Arm Asay	1
	1310-2002-12101	-Hinge Assy	2
5	1312-3304-14300	-Plate Dial Rear	1
	1312-1504-10001	-Plate Sign Lamp	1
4	1310-3010-10200	-Metal Mount Assy	1
	1312-3101-10800	-Metal Mount	2
	1312-3306-11100	-Panel Rear	1
	1310-1016-11200	-Panel Decorate Assy	1
11	1312-1203-17600	-Panel Control	1
12	1312-1201-16600	-Plate Dial	1
	1312-4202-10600	Nut	1
8	1312-1410-10500	-Cover	1
	1312-2904-11000	-Pad Lid	2
	1312-4203-10400	Washer-Headphone	1
15	1310-1001-14301	Knob Assy-TUNING	1
13	1310-1001-14300	Knob Assy-BASS, TREBLE, BALANCE, VOLUME	4
14	1310-1001-14200	Knob Assy-SELECT	1
16	1312-1804-10600	Leg Rubber	4
	1312-3608-10200	Cramp Wire	4
9	1312-1105-11000	Plate Bottom	1
10	1312-3305-12300	Panel Front	1
	1312-3614-11100	Mount Printed Circuit Board	1
	1312-3617-10700	Metal Mount Trans	1
	1312-6201-13000	Plate Heat Sink	1
	1310-3002-10500	Drum Assy	1
	1312-4112-10011	Rope	1
	1312-4111-00100	Spring Rope	1
	1312-4107-10000	Pulley	2
	1312-4101-12800	Pointer	1
	1312-6111-10000	Bushing-RF Circuit	6
	1312-6111-10300	Bushing-AC Cord	1
	1312-4108-10000	Spindle Pulley-Pulley, RF Circuit	8
	1312-3610-10500	Leg Egg Like-Wire Lead Clamp, 17mm	2
	1312-3610-10000	Lug Egg Like-Wire Lead Clamp, 25mm	1
	1310-3003-11500	-Shaft Dial Assy	1
	1312-4102-12200	-Shaft Dial	1
	1312-4114-10200	-Bearing	1
	1312-4206-10100	-Ring E	1
	1312-4202-11000	-Nut	1
	1312-4203-13100	-Washer	1
	1312-5202-10400	Rubber Cushion	2
	1312-6301-10300	Cover Pilot	1

Part No.	Description	Q'ty
	Electrical Parts	
1310-4001-13800	PCB Assy-AF Circuit ·····*1	1
1310-4001-13600	PCB Assy-RF Circuit ·····*2	1
1310-4001-13700	PCB Assy-MPX Circuit ·····*3	1
4-2519-20890	Power Trans	1
4-2239-20400	Electrolytic Capacitor 2000μF/25WV	1
4-6129-20100	Pilot Lamp-6.3V, 0.25A	1
4-2359-20870	Pilot Socket	1
4-2349-20100	Fuse-0.5A	1
4-2359-20250	Fuse Holder	1
4-2359-20190	DIN Connector	1
4-2359-20230	4P PU Socket-RECORDER, PLAYBACK	1
4-2379-20020	3P Antenna Terminal-AM, FM Antenna Terminal	1
4-2359-20880	Socket 4P-Speaker Terminal	1
4-2439-20180	Power Cord	1
4-2369-20260	Plug Siemens	(1)
4-2369-20270	Plug Continental	(1)
4-2369-20280	Plug Australia 3P	(1)
4-2369-	Plug England 3P	(1)
4-2359-20640	Jack Phone-Headphone	1
4-2579-20750	Antenna Coil MW-Bar Antenna	1
4-2319-21430	Switch Rotary-SELECTOR	1
4-2369-20090	Reseptacle	29
4-2379-20140	Terminal Lug 1-2P	1
4-2359-20490	Socket 2P-Player AC	1
4-2379-20560	Terminal Lead-FM, AM Antenna Lead	2

Ref. No.	Description	Q'ty
D11, D12	Diode-10D1	2
R401, R402	Resistor-Carbon R, 100 ohm, ±10%, ¼W	2
R403, R404	Resistor-Carbon R, 2.7 ohm, ±10%, ¼W	2
R405, R406	Resistor-Carbon R, 100 Kohm, ±10%, ¼W	2
R407, R408	Resistor-Carbon R, 680 Kohm, ±10%, ¼W	2
C401, C402	Capacitor-Paper, 0.047 μF, ±20%, 400WV	2
C403, C404	Capacitor-Ceramic, 50 μμF, ±20%, 50WV	2

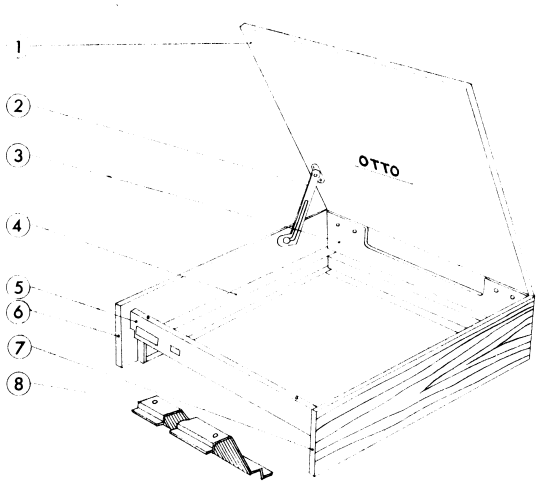

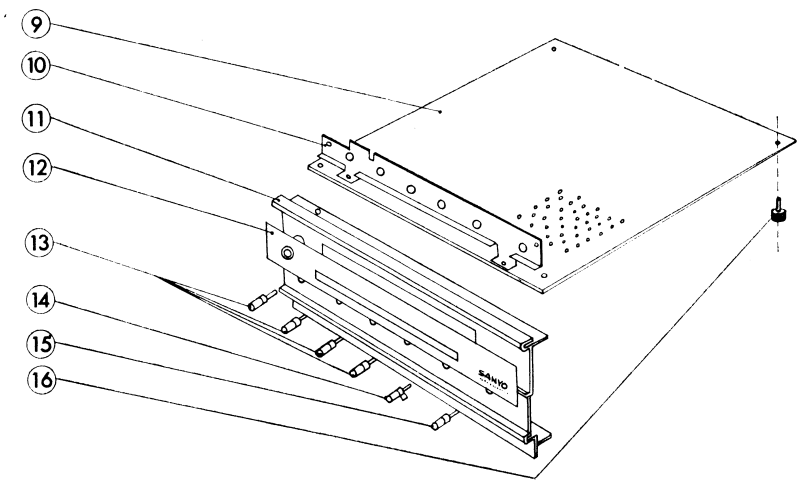

Ref. No.	Part No.	Description	Q'ty
		Enclosure Section	
17	1312-1113-13400	Enclosure Speaker	2
20	1312-1104-16200	Baffle	2
	1312-1102-19500	Rear cover	2
19	1312-1402-12000	Net	2
18	1312-1301-11001	Badge-OTTO	2
	1312-7102-10800	Name plate Rear	1
	1312-5203-12300	Felt	2
	4-1519-21080	Loudspeaker	2
	4-2369-20300	Plug 2P	2
		Turntable Section	
21	1312-1109-11600	-Plate Player Support	1
		-Felt	2
27	1340-6031-10400	-Armrest Assy	1
		-Armrest	1
		-Pole Armrest	1
22	1340-5004-10700	-Mat Turntable Assy	1
		-Mat Turntable	1
		-Plate Decorate T.T	1
24	1340-1001-11400	-Knob Speed Selector Assy	1
		-Knob	1
		-Panel Speed Indicate	1
	1342-2902-00100	Pin Adapter EP	1
25	1342-2901-10000	Adapter EP	1
23	1342-1208-10500	Plate Indicater Speed	1
	1342-4108-10000	Plate	1
	1312-6101-11200	Plate Shield	1
26	4-1579-20480	-Pickup Assy	1
	1340-4001-01200	-Tone Arm Assy	1
	4-1579-26430	-Cartridge	1
	4-1579-22901	-Stylus	1
	4-2319-20940	Switch	1
	4-2379-20300	Terminal Lug 4P	1
	4-2369-20180	Plug 2P	1
R501, 502		Resistor-Carbor R, 47 Kohm, ±10% ¼W	2
C501, 502		Capacitor-Ceramic, 50$\mu\mu$F, ±20% 50WV	2
C53		Capacitor-Paper, 0.047μF, ±20 400WV	1

Ref. No.	Part No.	Description	Q'ty
		Phono Motor	
	4-1569-20400	Phono Motor Assy	1
1		-Motor Assy (E-411111)	1
2		-Chassis (E-415680)	1
3		-Steel Ball 4ϕ	1
4		-Cam Assy (E-403072)	1
5		-C Washer 3.2mm	1
6		-Arm ①② Assy (E-405590)	1
7		-Spring (E-405910)	1
8		-Washer 4.7ϕ×10ϕ×0.5t	1
9		-Spring ② (E-101522)	1
10		-Idler Assy (E-407210)	1
11		-C Washer 3.2 mm	1
12		-Motor pulley Assy 50Hz (E-415660-50)	1
		-Motor pulley Assy 60Hz (E-41566-60)	1
13		-Cushion rubber (E-242020)	3
14		-Pipe (E-234970)	3
15		-Washer (E-100711)	4
16		-Screw ⊕ 3×16	3
17		-Spring washer 3mm	3
18		-Nut 3mm	2
19		-Turntable Assy (E-414081)	1
20		-Label (E-415721)	1

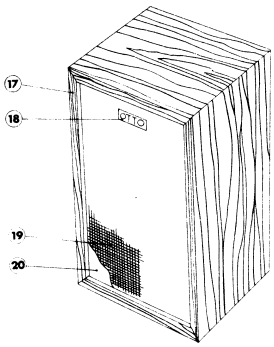

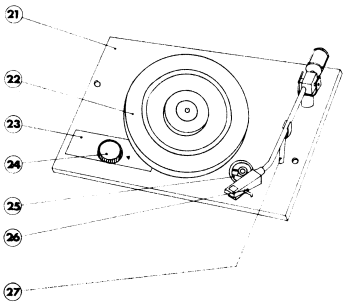

PHONO MOTOR

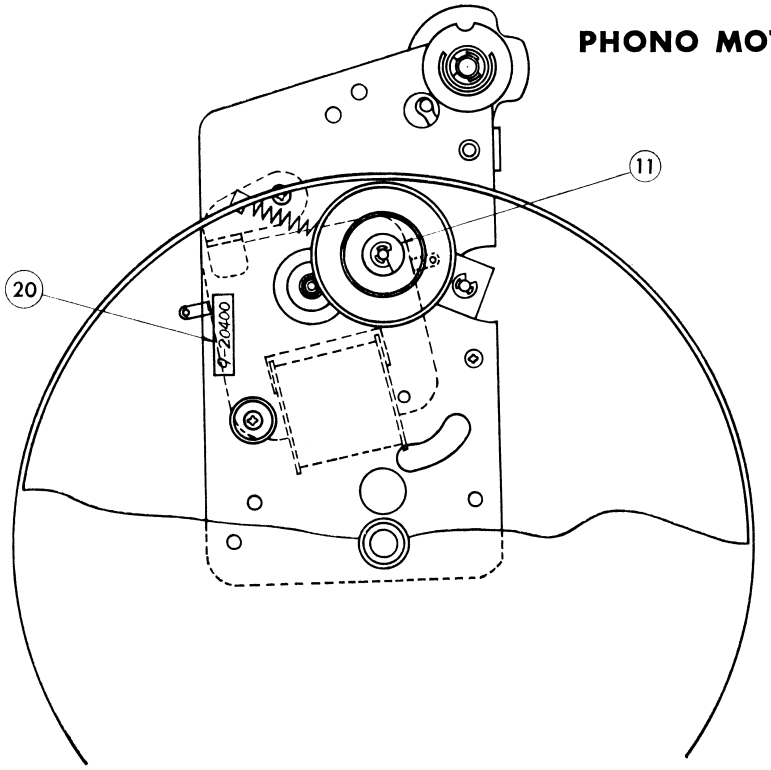

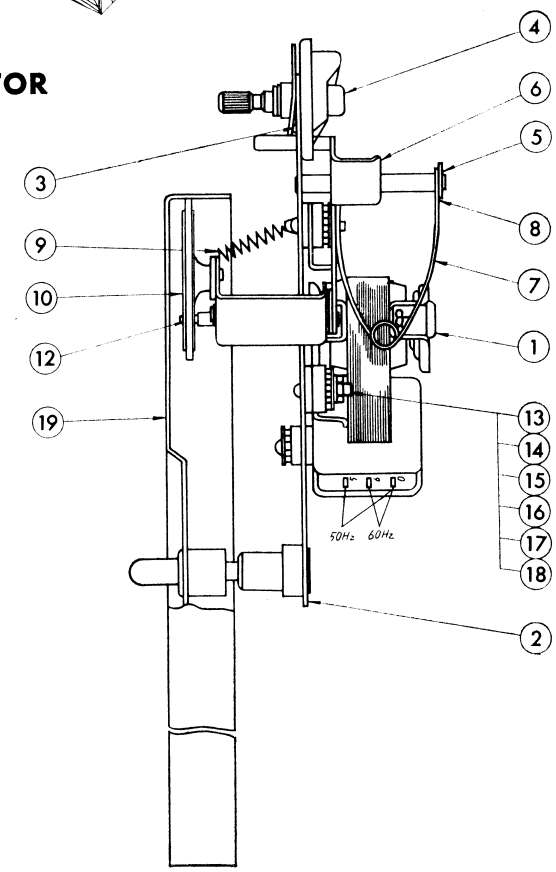

ADJUSTMENTS

SW, MW ADJUSTMENT

Step	Adjusting circuit	Connections		SG frequency	Position of tuning dial	Adjustment	V.T.V.M.
		Input	Output				
1	IF	Connect SG. to VC3.	Connect VTVM to tast point TP3.	455 KHz (400 Hz, 30% modulation)	Near max. capacity of VC. at position with no unrequred signal.	AM—IFT1 AM—IFT2 AM—IFT3	Max.

	Step	Adjusting circuit	Connections		SG frequency	Position of tuning dial	Adjustment	V.T.V.M. Oscilloscope
			Input	Output				
MW	1	RF	Connect standard loop antenna to output terminals of SG. Place receiver 60 cm from loop antenna.	Connect V.T.V.M to speaker terminals or test point TP3.	600 KHz (400 Hz 30% modulation)	23.4 mm	MW ANT W 8015 MW OSC	Max.
MW	2	RF			1400 KHz (400 Hz, 30% modulation)	107.0 mm	TC 3 TC 5	Max.
SW	1	RF			4 MHz (400 Hz, 30% modulation)	13.8 mm	SW ANT SW OSC	Max.
SW	2	RF			11 MHz (400 Hz, 30% modulation)	113.3 mm	TC 4 TC 6	Max.

PREPARATION
1. Completely close variable capacitor.
2. Set dial pointer on very left line of dial scale.
3. Conuect SG and V.T.V.M.
4. Use a screwdrivr with plastic grip of all adjustments.

FM ADJUSTMENT

Step	Adjusting circuit	Connections		SG frequency	Position of tuning dial	Adjustment	V.T.V.M. Oscilloscope
		Input	Output				
1	IF	Connect sweep generator to test point TP1 through 0.01 μF.	Connect oscilloscope, VTVM to test point TP4.	10.7 MHz (non modulation)	Near max. capacity of VC. at position with no unrequred signal.	FM IFT1 FM IFT2 FM IFT3 FM IFT4 (primary)	Max. 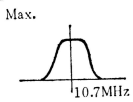
2	Ratio Det.		Connect oscilloscope, VTVM to test point TP2.	〃		FM DET	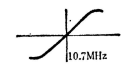
3	RF	Connect FM SG. to FM ANT. terminals.	Connect V.T.V.M to test point TP2.	90 MHz (400 Hz, 30% modulation)	22.0 mm	FM ANT RF COIL FM OSC	Max.
4	RF			106 MHz (400 Hz, 30% modulation)	102.1 mm	TC1 TC2	Max.
5	Repeat adjustments.						

PREPARATION
1. Completely close variable capacitor.
2. Set dial pointer on very left line of dial scale.
3. Connect sweep generator, FM SG, V.T.V.M. and oscilloscope. FM antenna input impedance is 75 ohms.
4. Set selector switch to "FM"
5. Use a screwdriver with plastic grip for all adjustments.

FM MPX ADJUSTMENT

Step	Adjusting circuit	Connections		Position of tuning dial	Adjustment	V.T.V.M.
		Input	Output			
1	SCA signal filter (67KHz)	Add SCA signal to FM stereo SG to FM ANT terminals. FM stereo signal OFF.	Connect V.T.V.M to tast point TP5.	Near max. Capacity of VC. at position with no unrequred signal.	T1	Min.
2	19 KHz pilot signal	Connect FM stereo SG to FM ANT terminals. 19KHz signal ON. SCA signal OFF.	Connect V.T.V.M to tast point TP6.		T2	Max.
3	FM stereo signal separation	Connect FM stereo SG to FM ANT terminals. 19KHz signal ON. Main channel, sub channel signal ON. Add 1000Hz signal from L, CH.	Connect V.T.V.M to (R) output terminal.		T2 T3	Min.
4	FM stereo signal separation	Connect FM stereo SG to FM ANT terminals. 19KHz signal ON. Main channel, sub channel signal ON. Add 1000Hz signal from R, CH.	Connect V.T.V.M to (L) output terminal.		T2 T3	Min.
5	Repeat steps 3~4. Set at position with max. channel separation.					

PREPARATION
1. Variable capacitor completely closed.
2. Connect FM stereo SG. and V.T.V.M.
3. Selector switch to "FM AUTO"
4. Use a screwdriver with plastic grip for all adjustments.