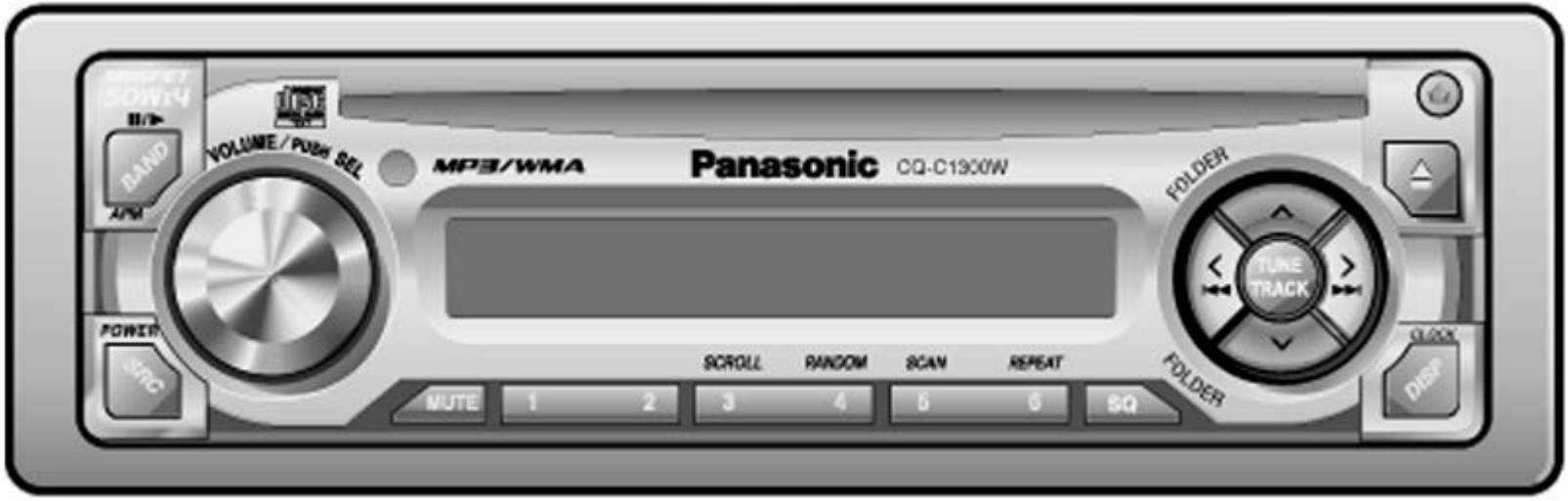
50W×4
BAND
AM/FM
VOLUME / PUSH SEL
MP3/WMA
Panasonic
CQ-C1900W
FOLDER
TUNE
TRACK
POWER
SRC
SCROLL
RANDOM
SCAN
REPEAT
MUTE
1
2
3
4
5
6
SQ
FOLDER
CLOCK
DISP

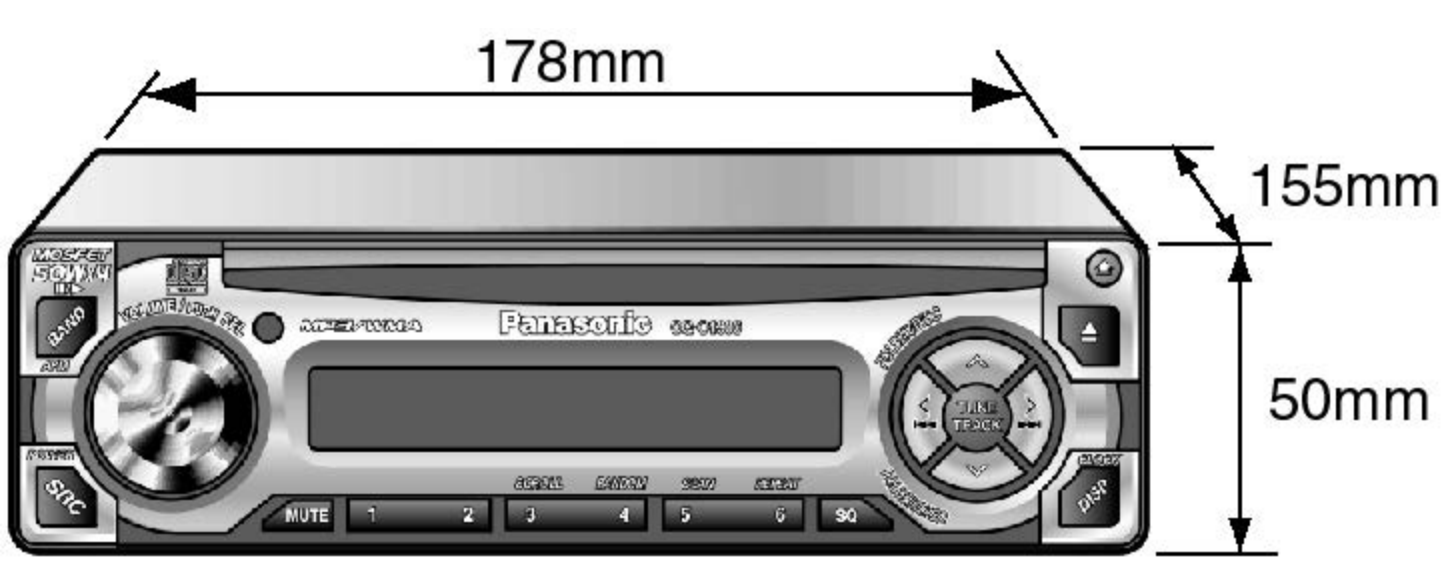
178mm
155mm
50mm
MOSFET
50W×4
BAND
AM
SRC
Panasonic
TIME
TRACK
MUTE
1
2
3
4
5
6
SQ
DISP

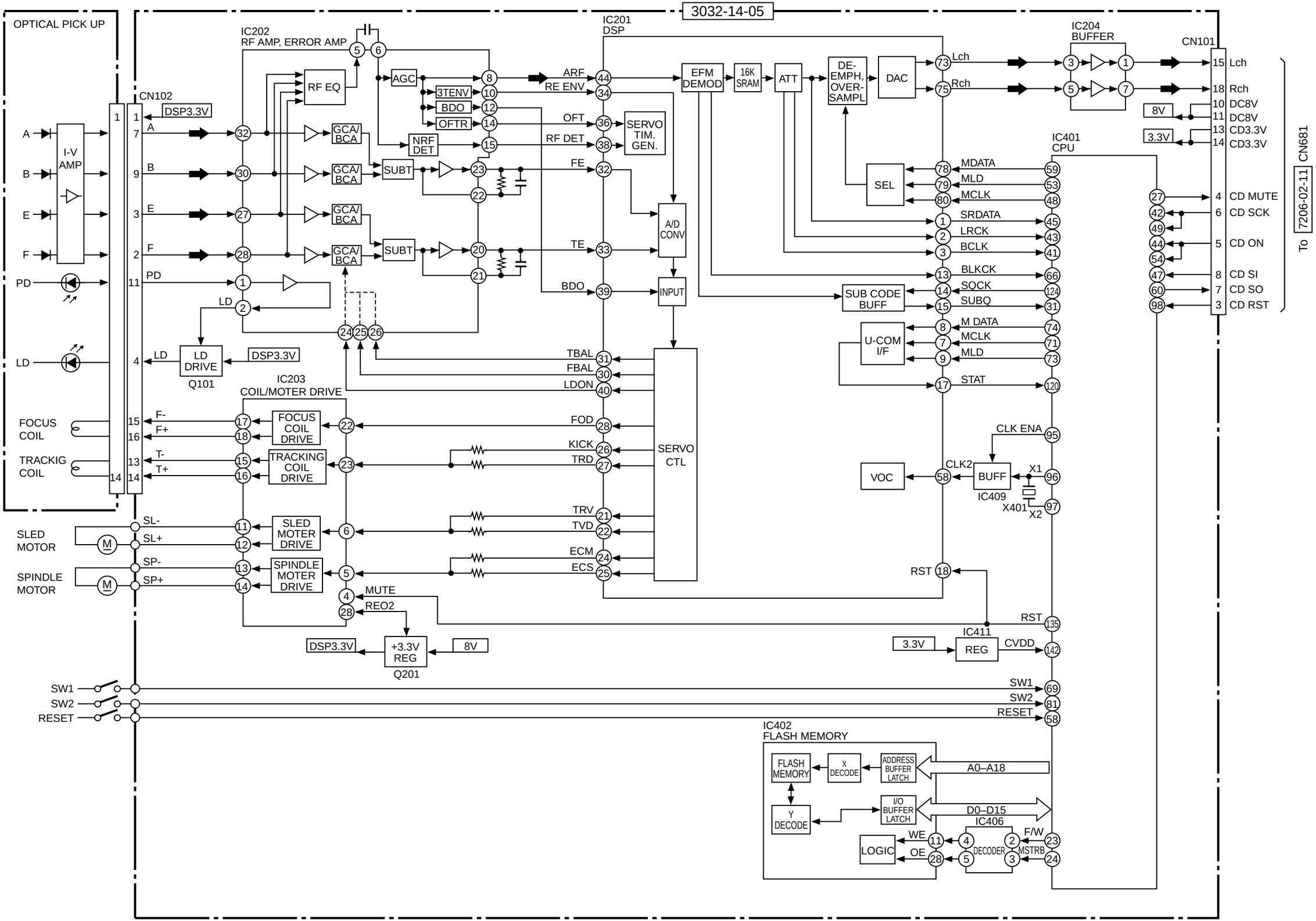

CD Servo Block CDM-007

Printed in Japan 2004.2 (K)
(Recycled Paper)

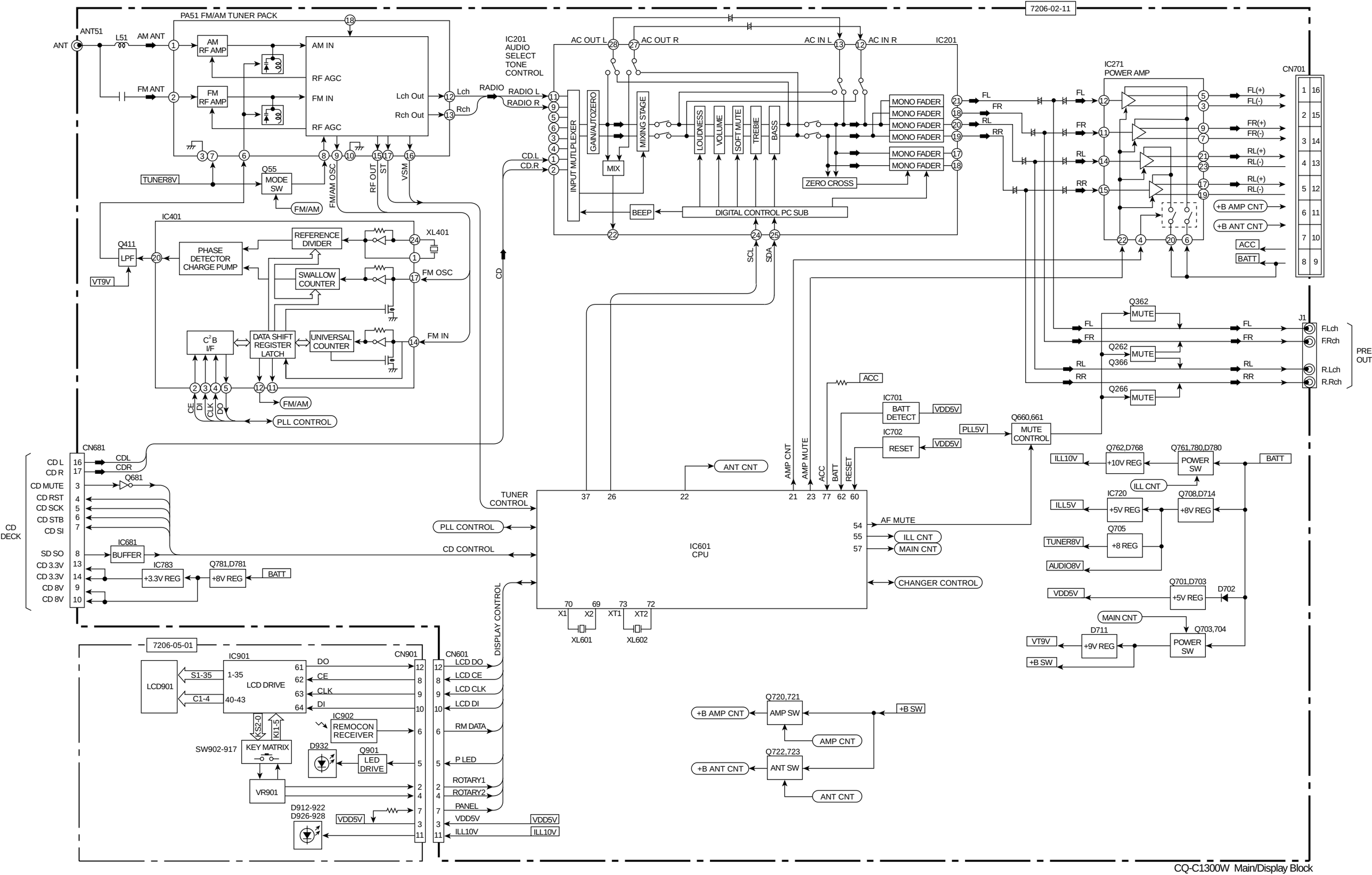
7206-02-11
PA51 FM/AM TUNER PACK
ANT51
ANT
L51
AM ANT
FM ANT
AM RF AMP
FM RF AMP
AM IN
RF AGC
FM IN
RF AGC
Lch Out
Rch Out
Lch
Rch
RADIO
TUNER8V
Q55
MODE SW
FM/AM
FM/AM OSC
RF OUT
ST
VSM
IC401
Q411
LPF
VT9V
PHASE DETECTOR CHARGE PUMP
REFERENCE DIVIDER
XL401
SWALLOW COUNTER
FM OSC
C²B I/F
DATA SHIFT REGISTER LATCH
UNIVERSAL COUNTER
FM IN
CE
DI
CLK
DO
FM/AM
PLL CONTROL
IC201 AUDIO SELECT TONE CONTROL
AC OUT L
AC OUT R
AC IN L
AC IN R
IC201
RADIO L
RADIO R
CD.L
CD.R
INPUT MUTLPLEXER
GAIN/AUTOZERO
MIX
MIXING STAGE
LOUDNESS
VOLUME
SOFT MUTE
TREBLE
BASS
MONO FADER
ZERO CROSS
BEEP
DIGITAL CONTROL PC SUB
SCL
SDA
CD
IC271 POWER AMP
FL
FR
RL
RR
FL(+)
FL(-)
FR(+)
FR(-)
RL(+)
RL(-)
+B AMP CNT
+B ANT CNT
ACC
BATT
CN701
Q362
MUTE
Q262
Q366
Q266
J1
F.Lch
F.Rch
R.Lch
R.Rch
PRE OUT
CN681
CD L
CD R
CD MUTE
CD RST
CD SCK
CD STB
CD SI
SD SO
CD 3.3V
CD 8V
CD DECK
CDL
CDR
Q681
IC681
BUFFER
IC783
+3.3V REG
Q781,D781
+8V REG
IC701
BATT DETECT
VDD5V
IC702
RESET
PLL5V
Q660,661
MUTE CONTROL
AMP CNT
AMP MUTE
ACC
BATT
RESET
ANT CNT
TUNER CONTROL
PLL CONTROL
CD CONTROL
IC601 CPU
AF MUTE
ILL CNT
MAIN CNT
CHANGER CONTROL
X1
X2
XT1
XT2
XL601
XL602
DISPLAY CONTROL
Q762,D768
+10V REG
Q761,780,D780
POWER SW
ILL10V
ILL CNT
IC720
+5V REG
Q708,D714
+8V REG
ILL5V
Q705
+8 REG
TUNER8V
AUDIO8V
Q701,D703
+5V REG
D702
VDD5V
MAIN CNT
D711
+9V REG
Q703,704
POWER SW
VT9V
+B SW
7206-05-01
IC901
LCD DRIVE
LCD901
S1-35
C1-4
1-35
40-43
DO
CE
CLK
DI
CN901
CN601
LCD DO
LCD CE
LCD CLK
LCD DI
IC902
REMOCON RECEIVER
RM DATA
KS2-0
KI1-5
KEY MATRIX
SW902-917
D932
Q901
LED DRIVE
P LED
VR901
ROTARY1
ROTARY2
PANEL
D912-922
D926-928
VDD5V
ILL10V
Q720,721
AMP SW
+B AMP CNT
+B SW
AMP CNT
Q722,723
ANT SW
+B ANT CNT
ANT CNT

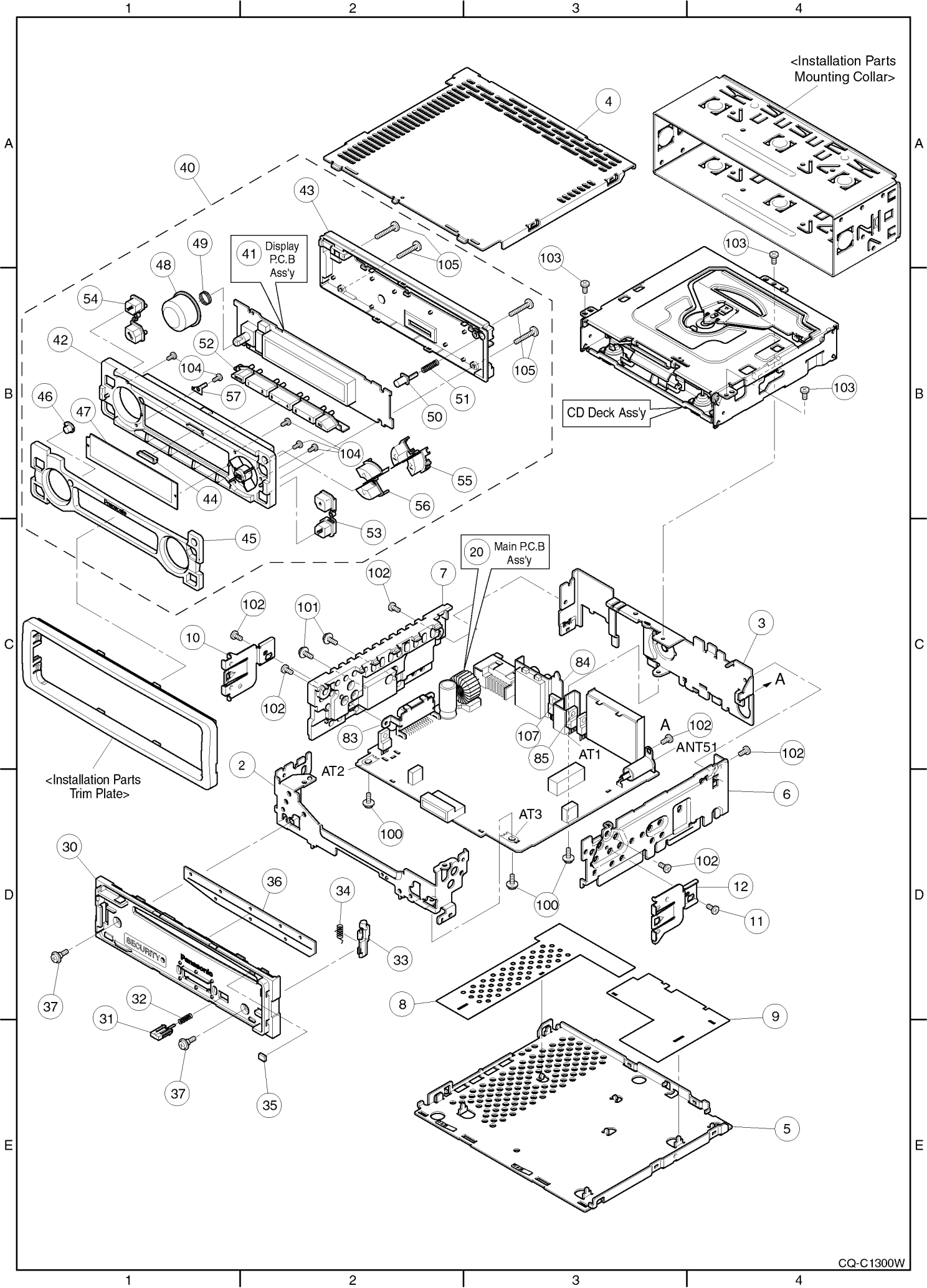
<Installation Parts Mounting Collar>
41 Display P.C.B Ass'y
CD Deck Ass'y
20 Main P.C.B Ass'y
<Installation Parts Trim Plate>
AT1
AT2
AT3
ANT51
A
SECURITY
Panasonic
CQ-C1300W

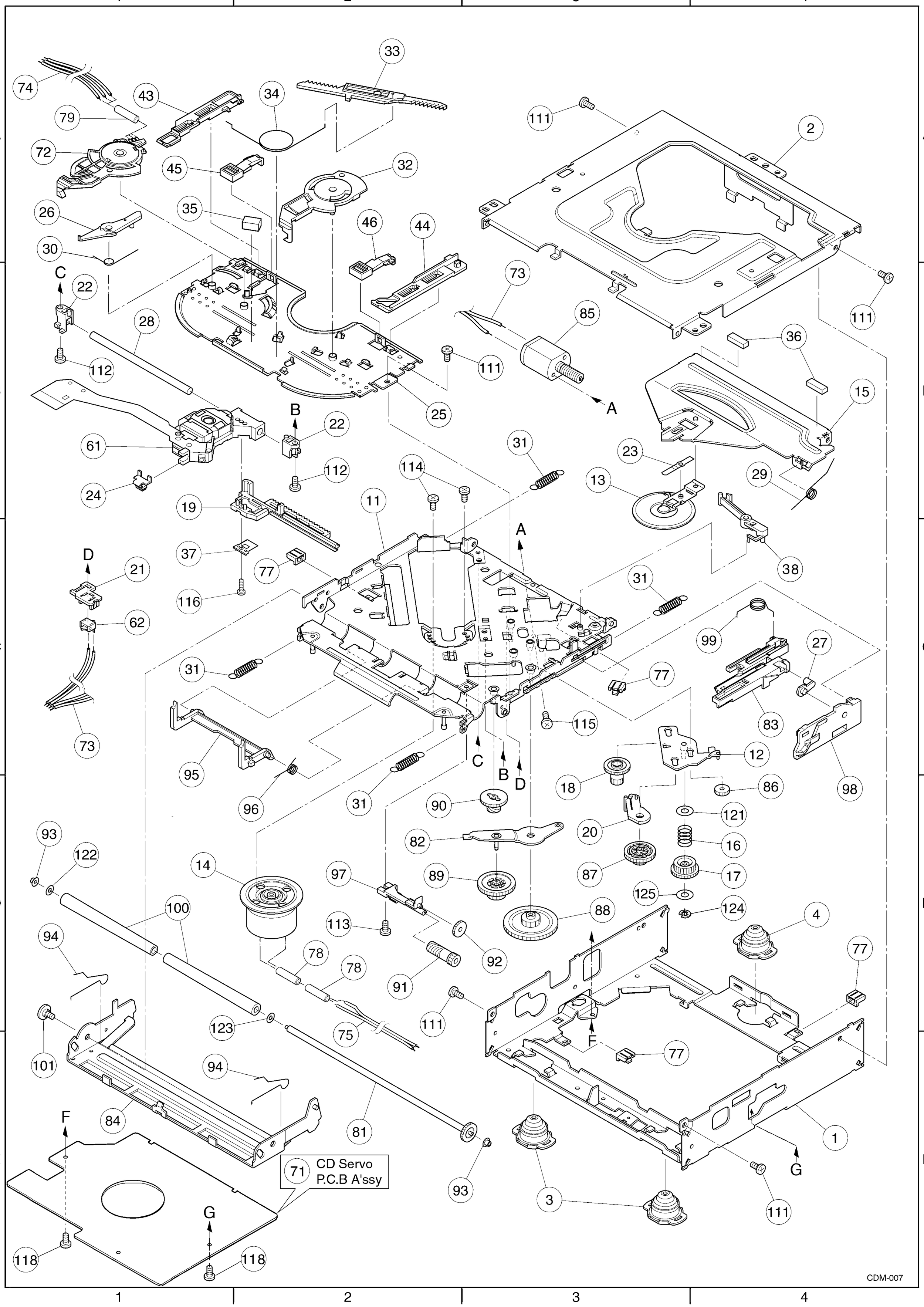
CD Servo
P.C.B A'ssy
CDM-007

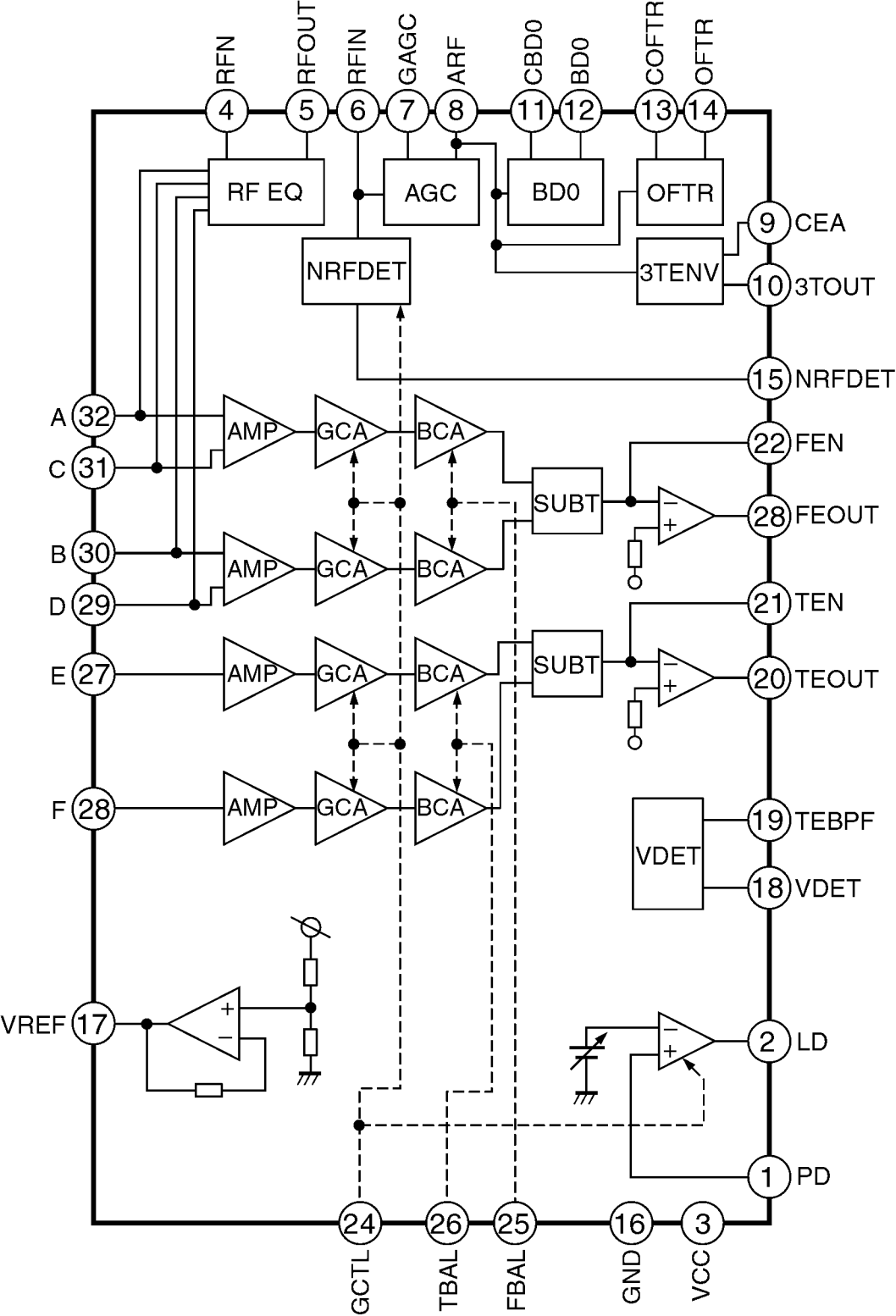
RFN
RFOUT
RFIN
GAGC
ARF
CBD0
BD0
COFTR
OFTR
4
5
6
7
8
11
12
13
14
RF EQ
AGC
BD0
OFTR
NRFDET
3TENV
9 CEA
10 3TOUT
15 NRFDET
A 32
C 31
B 30
D 29
E 27
F 28
AMP
GCA
BCA
SUBT
22 FEN
28 FEOUT
21 TEN
20 TEOUT
VDET
19 TEBPF
18 VDET
VREF 17
2 LD
1 PD
24
26
25
16
3
GCTL
TBAL
FBAL
GND
VCC

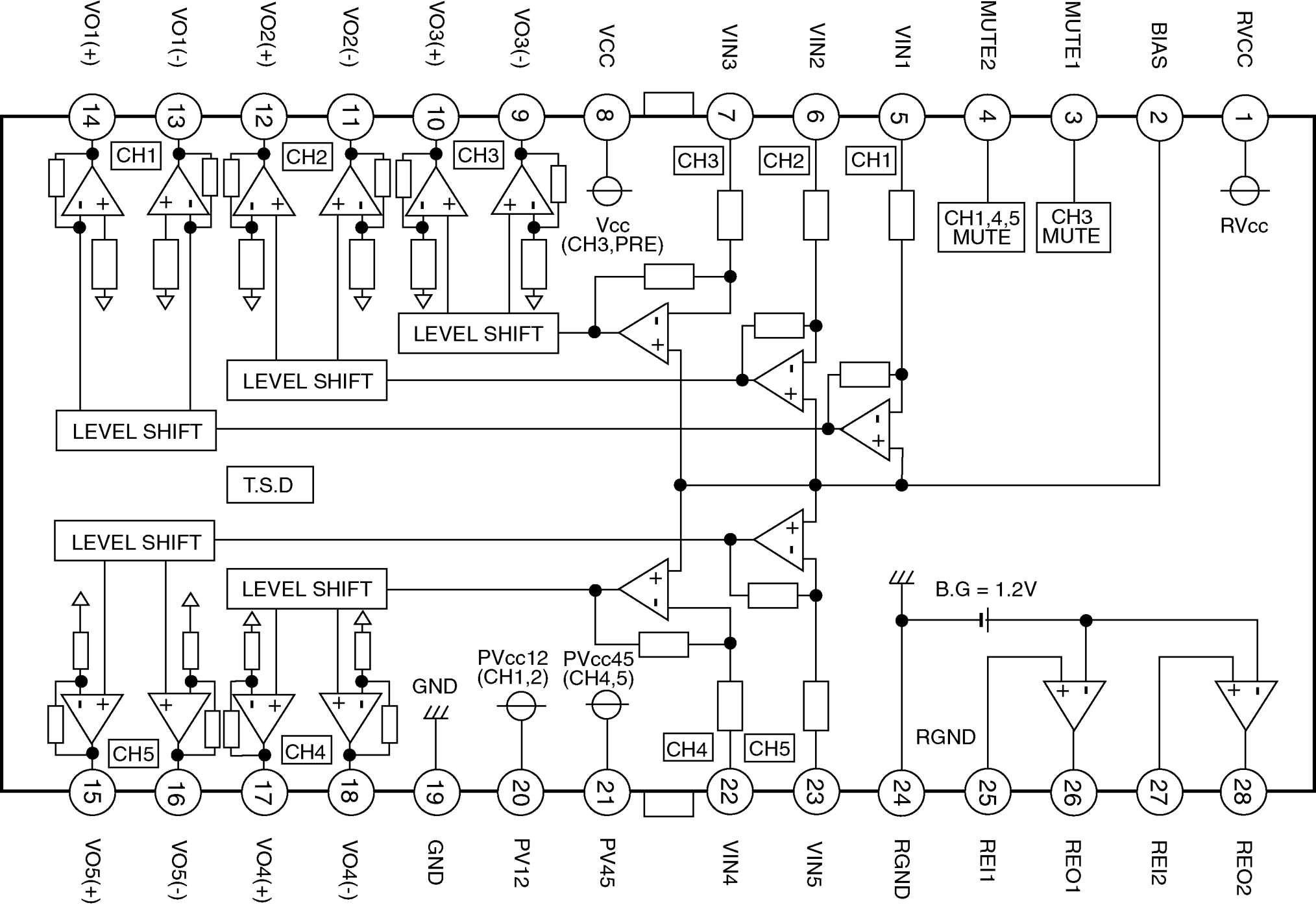
VO1(+)
VO1(-)
VO2(+)
VO2(-)
VO3(+)
VO3(-)
VCC
VIN3
VIN2
VIN1
MUTE2
MUTE1
BIAS
RVCC
14
13
12
11
10
9
8
7
6
5
4
3
2
1
CH1
CH2
CH3
CH3
CH2
CH1
Vcc
(CH3,PRE)
CH1,4,5
MUTE
CH3
MUTE
RVcc
LEVEL SHIFT
LEVEL SHIFT
LEVEL SHIFT
T.S.D
LEVEL SHIFT
LEVEL SHIFT
B.G = 1.2V
PVcc12
(CH1,2)
PVcc45
(CH4,5)
GND
CH5
CH4
CH4
CH5
RGND
15
16
17
18
19
20
21
22
23
24
25
26
27
28
VO5(+)
VO5(-)
VO4(+)
VO4(-)
GND
PV12
PV45
VIN4
VIN5
RGND
REI1
REO1
REI2
REO2

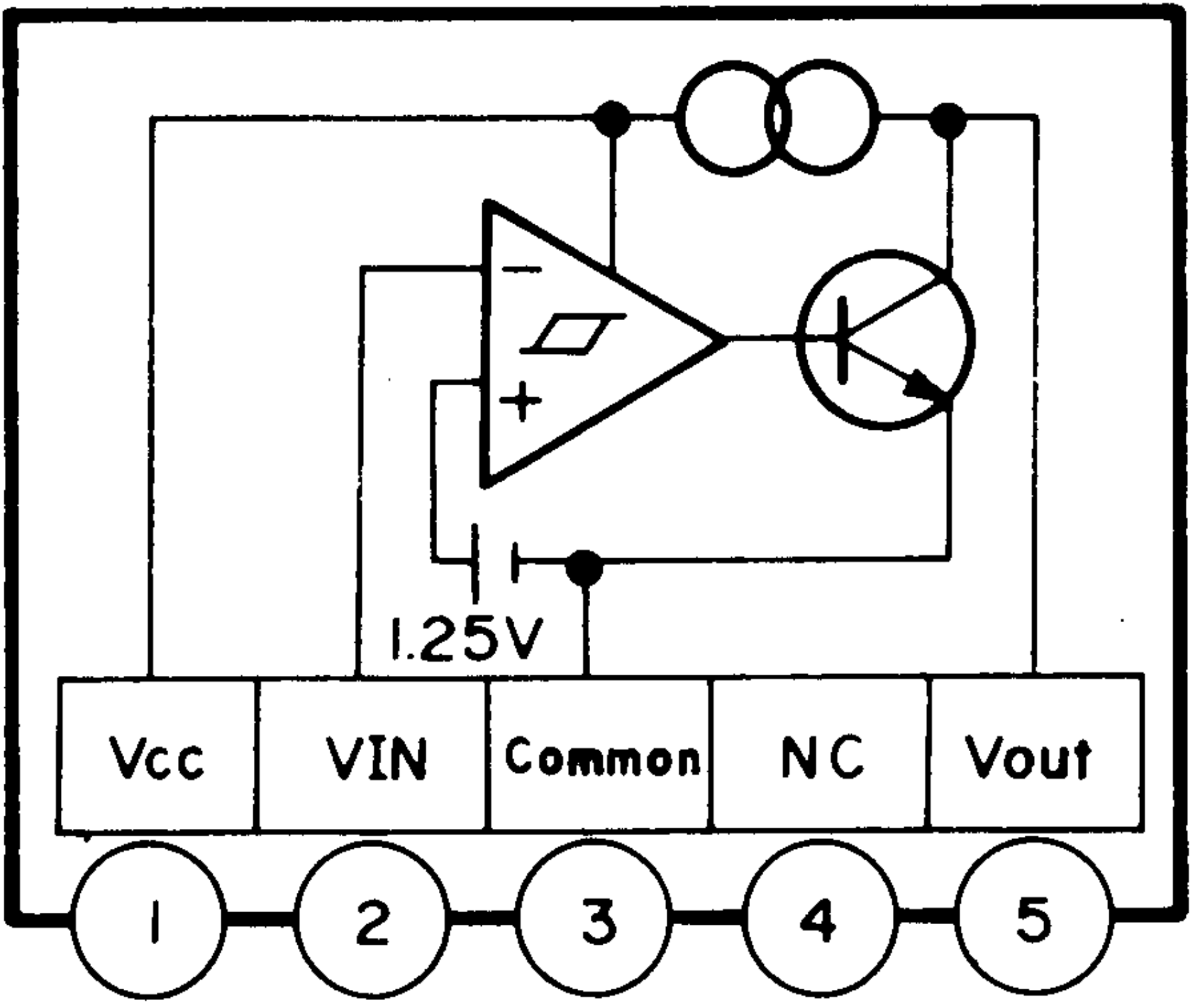
1.25V
Vcc
VIN
Common
NC
Vout
1
2
3
4
5

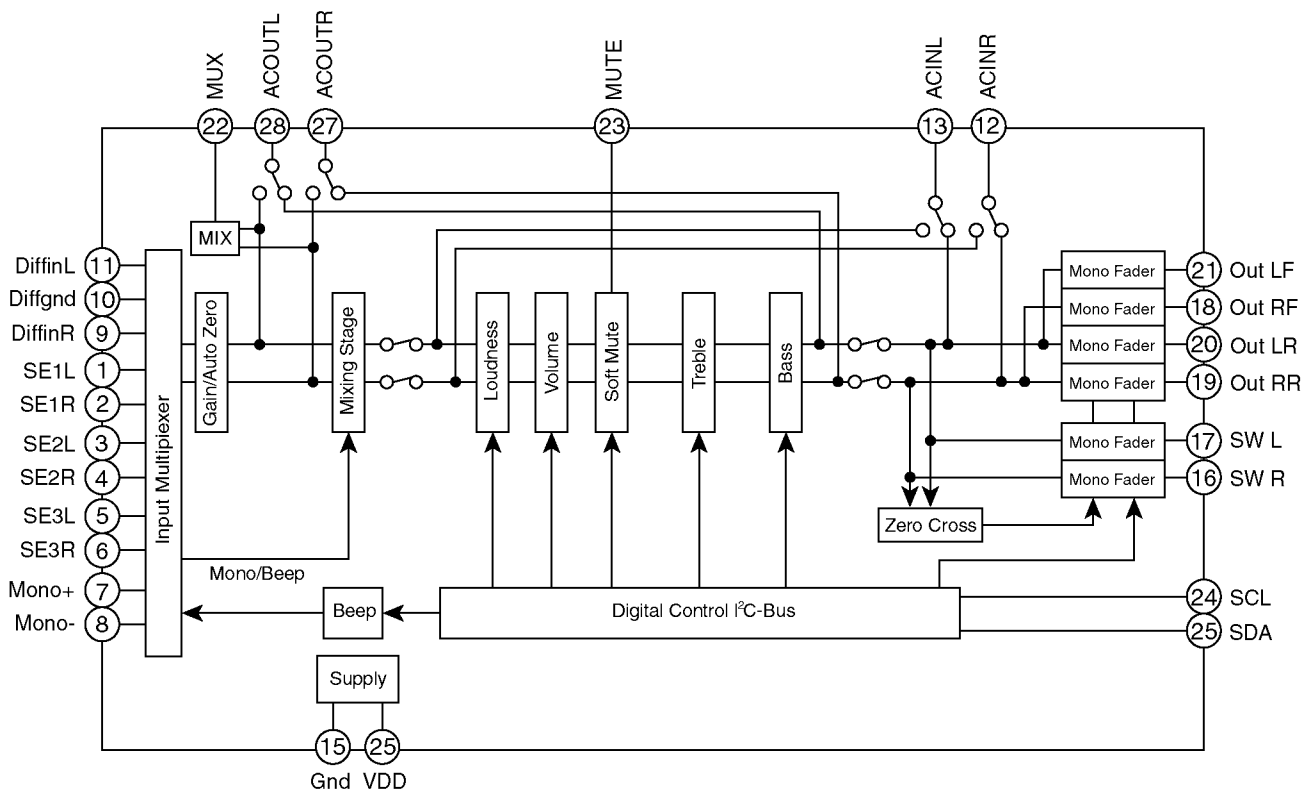
MUX
ACOUTL
ACOUTR
MUTE
ACINL
ACINR
22
28
27
23
13
12
MIX
DiffinL
Diffgnd
DiffinR
SE1L
SE1R
SE2L
SE2R
SE3L
SE3R
Mono+
Mono-
11
10
9
1
2
3
4
5
6
7
8
Input Multipiexer
Gain/Auto Zero
Mixing Stage
Loudness
Volume
Soft Mute
Treble
Bass
Mono Fader
Mono Fader
Mono Fader
Mono Fader
Mono Fader
Mono Fader
21
18
20
19
17
16
Out LF
Out RF
Out LR
Out RR
SW L
SW R
Zero Cross
Mono/Beep
Beep
Digital Control I²C-Bus
24
25
SCL
SDA
Supply
15
25
Gnd
VDD

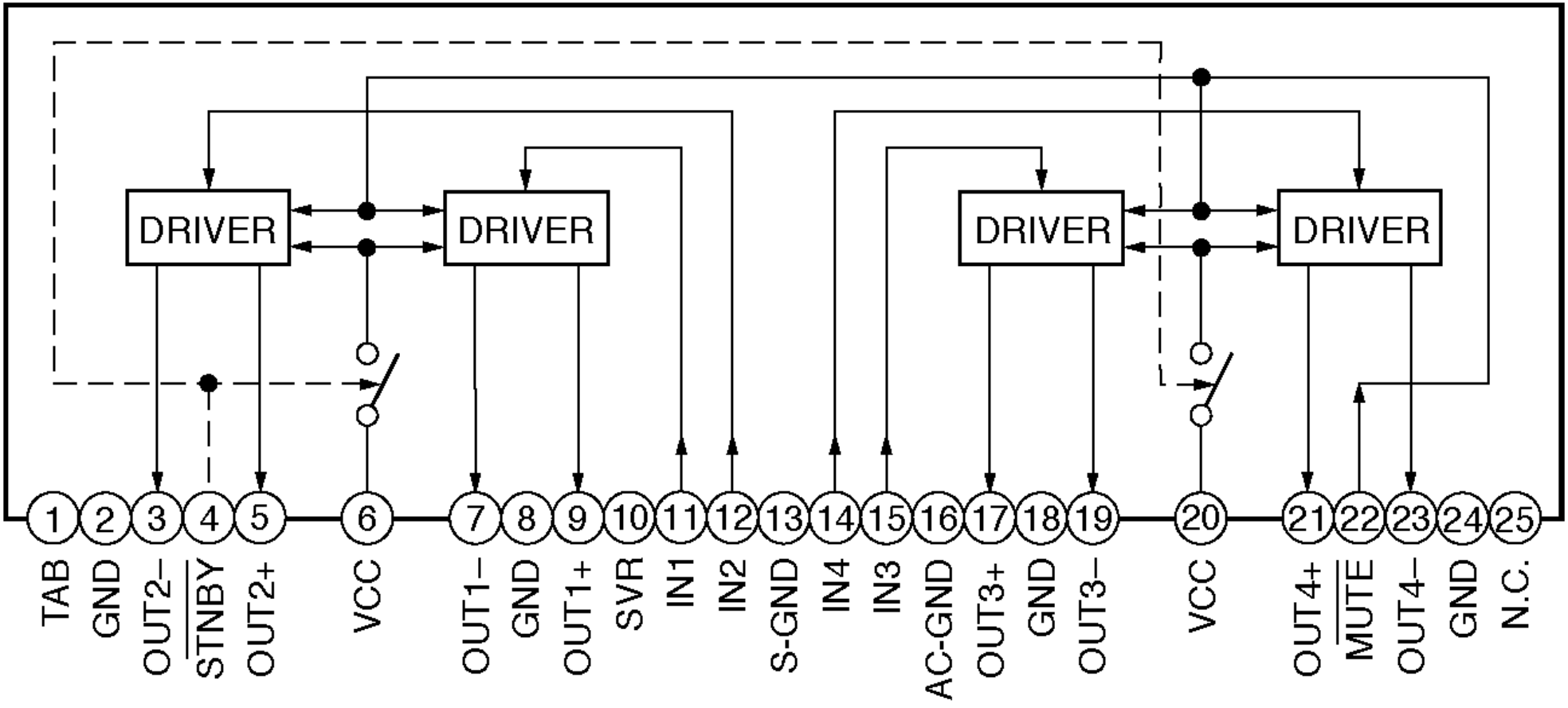
DRIVER
DRIVER
DRIVER
DRIVER
1 TAB
2 GND
3 OUT2–
4 STNBY
5 OUT2+
6 VCC
7 OUT1–
8 GND
9 OUT1+
10 SVR
11 IN1
12 IN2
13 S-GND
14 IN4
15 IN3
16 AC-GND
17 OUT3+
18 GND
19 OUT3–
20 VCC
21 OUT4+
22 MUTE
23 OUT4–
24 GND
25 N.C.

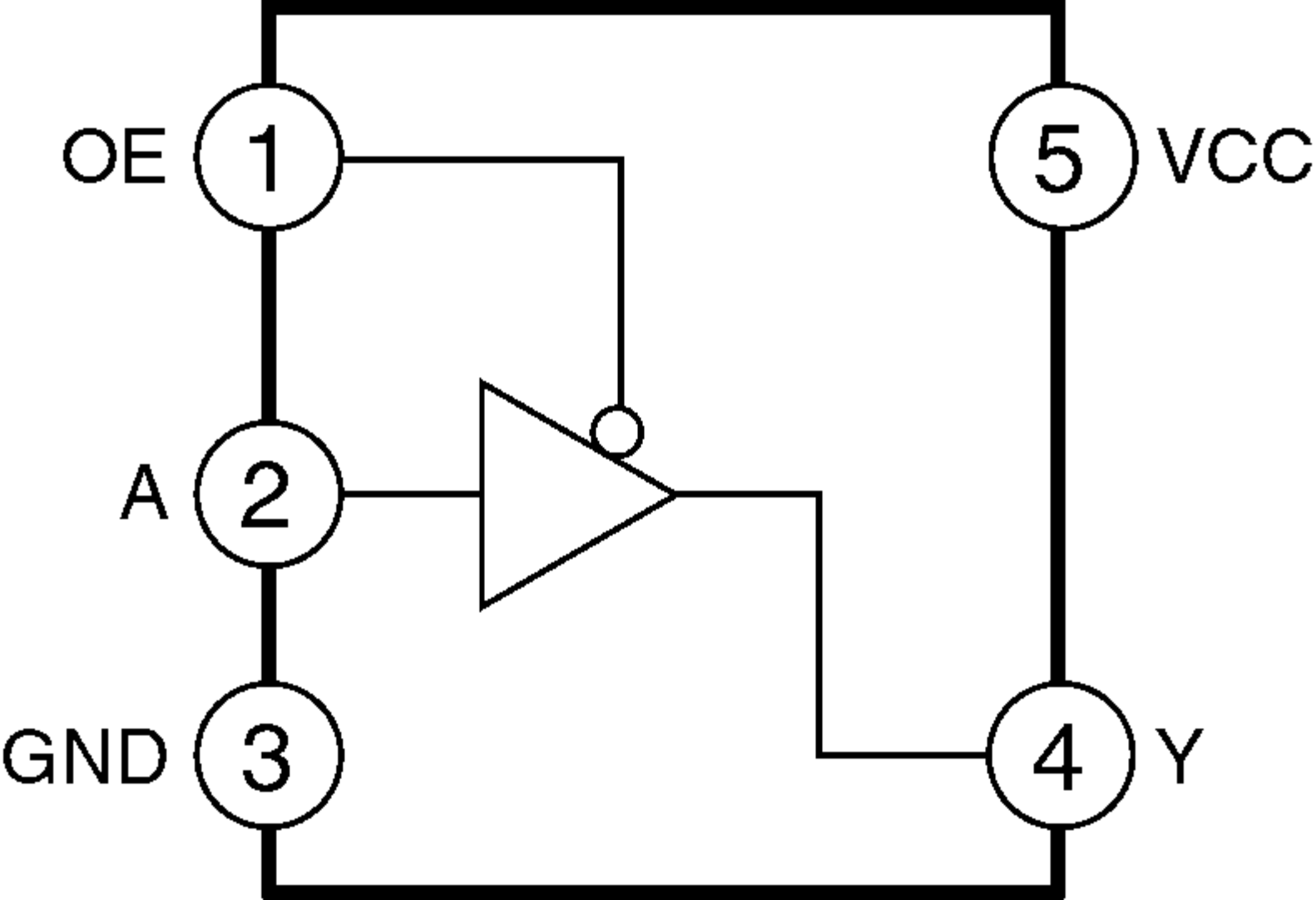
OE
1
A
2
GND
3
5
VCC
4
Y

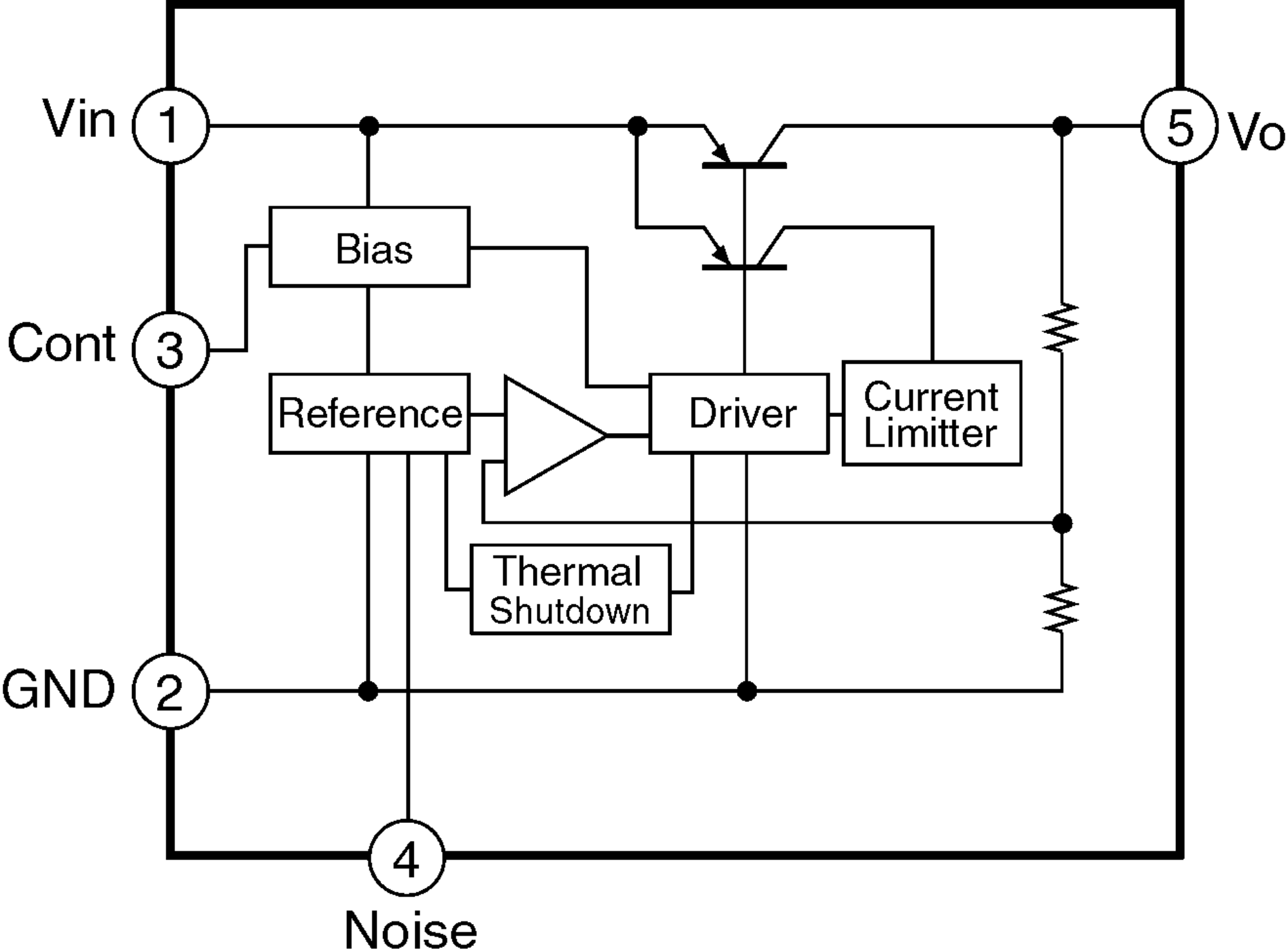
Vin
1
Cont
3
GND
2
4
Noise
5
Vo
Bias
Reference
Driver
Current
Limitter
Thermal
Shutdown

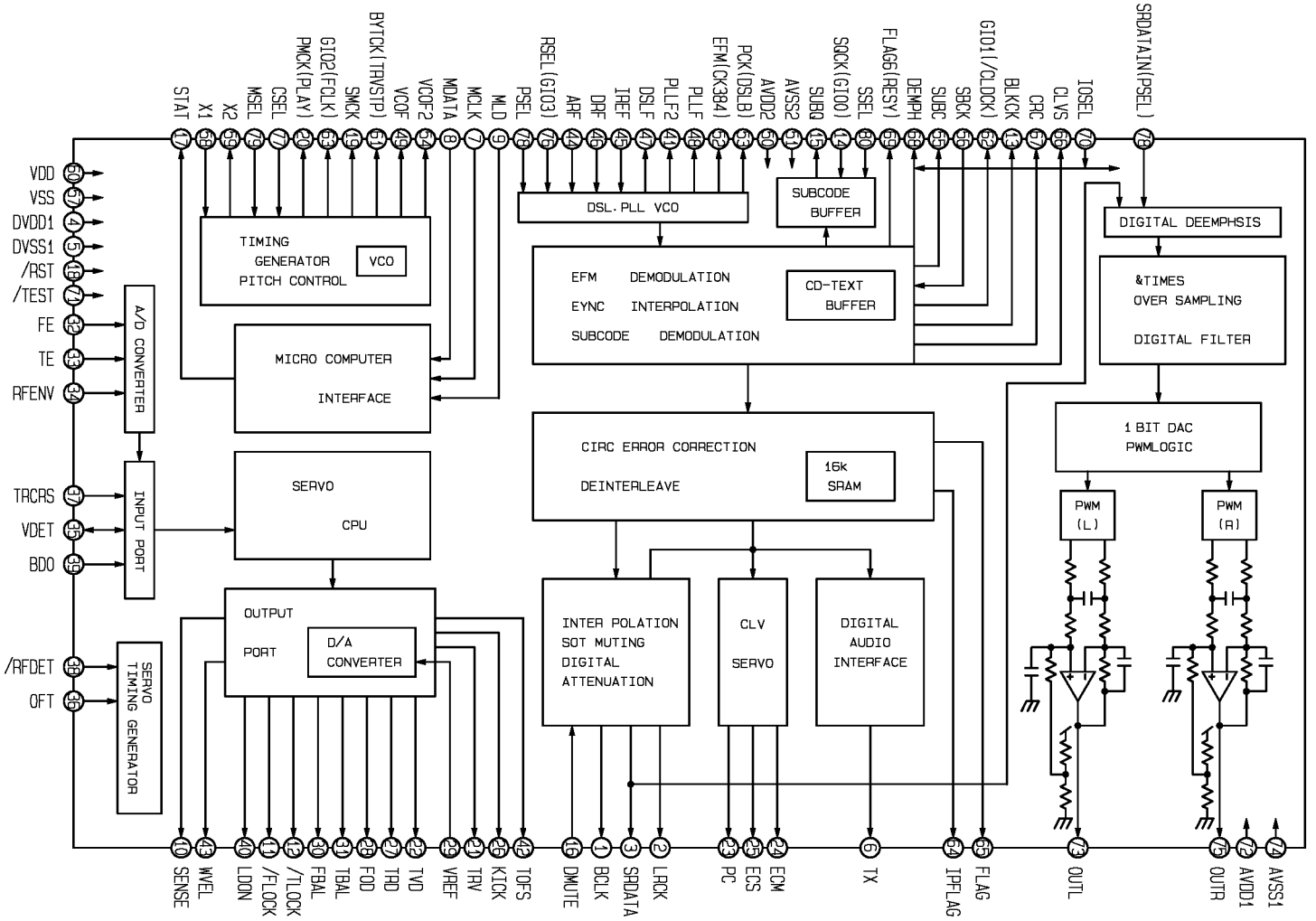
STAT 77
X1 28
X2 29
MSEL 78
CSEL 77
PMCK(PLAY) 20
GIO2(FCLK) 21
SMCK 19
BYTCK(TRVSTP) 31
VCOF 45
VCOF2 44
MDATA 8
MCLK 7
MLD 9
PSEL 78
RSEL(GIO3) 76
ARF 14
DRF 46
IREF 45
DSLF 47
PLLF2 41
PLLF 48
EFM(CK384) 42
PCK(DSLB) 43
AVDD2 30
AVSS2 31
SUBQ 15
SQCK(GIO0) 17
SSEL 80
FLAG6(RESY) 59
DEMPH 58
SUBC 55
SBCK 56
BLKCK 13
CRC 57
CLVS 58
IOSEL 10
SRDATAIN(PSEL) 78
VDD 30
VSS 31
DVDD1 4
DVSS1 5
/RST 16
/TEST 17
FE 32
TE 33
RFENV 34
TRCRS 37
VDET 35
BDO 36
/RFDET 38
OFT 39
TIMING GENERATOR PITCH CONTROL
VCO
DSL. PLL VCO
SUBCODE BUFFER
DIGITAL DEEMPHSIS
EFM DEMODULATION
EYNC INTERPOLATION
SUBCODE DEMODULATION
CD-TEXT BUFFER
&TIMES OVER SAMPLING
DIGITAL FILTER
A/D CONVERTER
MICRO COMPUTER
INTERFACE
CIRC ERROR CORRECTION
DEINTERLEAVE
16k SRAM
1 BIT DAC PWMLOGIC
PWM (L)
PWM (R)
INPUT PORT
SERVO
CPU
OUTPUT PORT
D/A CONVERTER
INTER POLATION SOT MUTING DIGITAL ATTENUATION
CLV SERVO
DIGITAL AUDIO INTERFACE
SERVO TIMING GENERATOR
SENSE 10
WVEL 13
LDON 40
/FLOCK 11
/TLOCK 12
FBAL 30
TBAL 31
FOD 28
TRD 27
TVD 22
VREF 26
TRV 23
KICK 25
TOFS 42
DMUTE 16
BCLK 1
SRDATA 3
LRCK 2
PC 23
ECS 25
ECM 24
TX 6
IPFLAG 64
FLAG 65
OUTL 73
OUTR 75
AVDD1 72
AVSS1 74

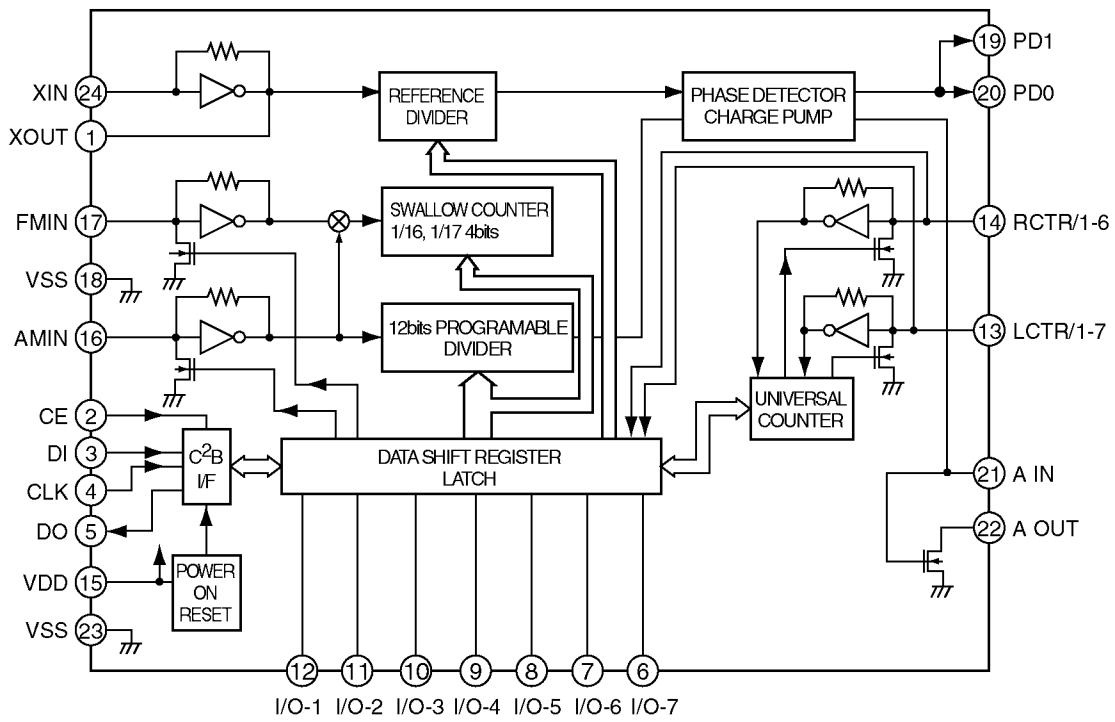
XIN
24
XOUT
1
FMIN
17
VSS
18
AMIN
16
CE
2
DI
3
CLK
4
DO
5
VDD
15
VSS
23
REFERENCE DIVIDER
PHASE DETECTOR CHARGE PUMP
SWALLOW COUNTER 1/16, 1/17 4bits
12bits PROGRAMABLE DIVIDER
C2B I/F
DATA SHIFT REGISTER LATCH
POWER ON RESET
UNIVERSAL COUNTER
19
PD1
20
PD0
14
RCTR/1-6
13
LCTR/1-7
21
A IN
22
A OUT
12
11
10
9
8
7
6
I/O-1
I/O-2
I/O-3
I/O-4
I/O-5
I/O-6
I/O-7

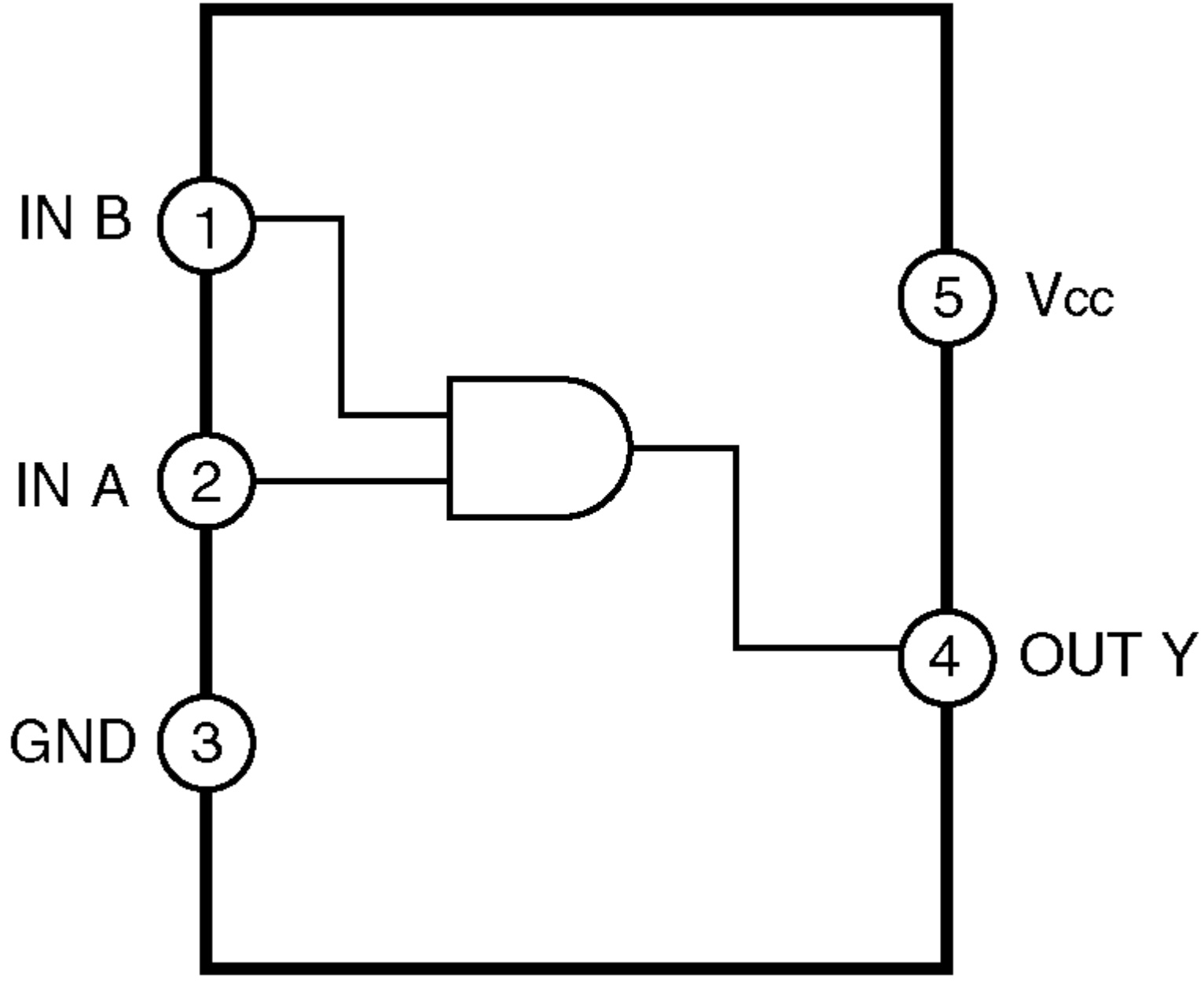
IN B
1
IN A
2
GND
3
5
Vcc
4
OUT Y

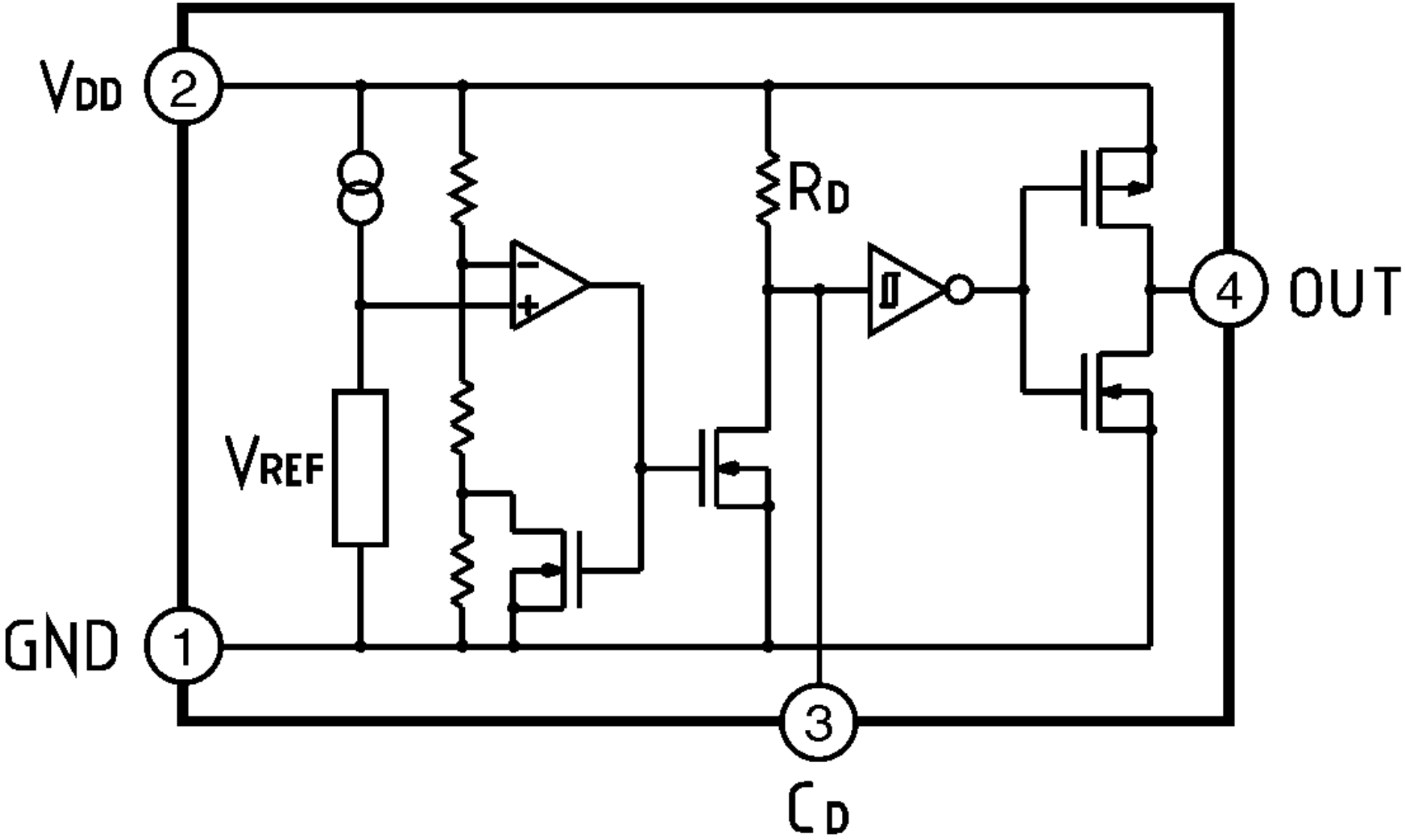
VDD
2
RD
4
OUT
VREF
GND
1
3
CD

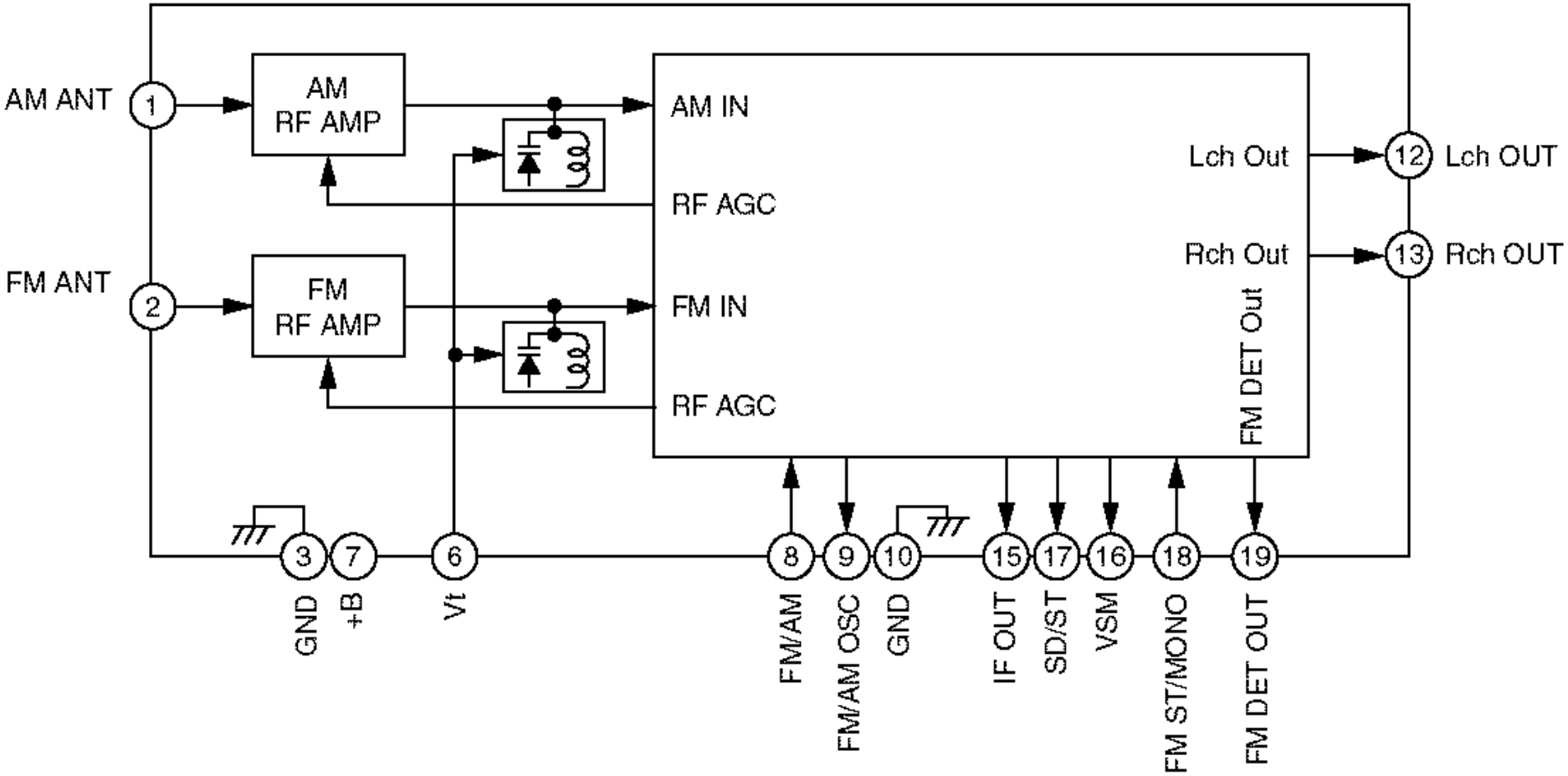
AM ANT
1
AM
RF AMP
FM ANT
2
FM
RF AMP
AM IN
RF AGC
FM IN
RF AGC
Lch Out
Rch Out
FM DET Out
12
Lch OUT
13
Rch OUT
3
7
6
8
9
10
15
17
16
18
19
GND
+B
Vt
FM/AM
FM/AM OSC
GND
IF OUT
SD/ST
VSM
FM ST/MONO
FM DET OUT

CAUTION:

This product utilizes a laser diode with the unit turned "on", laser radiation is emitted from the pickup lens.

Laser radiation from the pickup lens is safety level, but be sure the followings:

1. Do not disassemble the optical pickup unit, since radiation from exposed laser diode is dangerous.
2. Do not adjust the variable resistor on the pickup unit. It was already adjusted.
3. Do not look at the focus lens using optical instruments.
4. Recommend not to look at pickup lens for a long time.

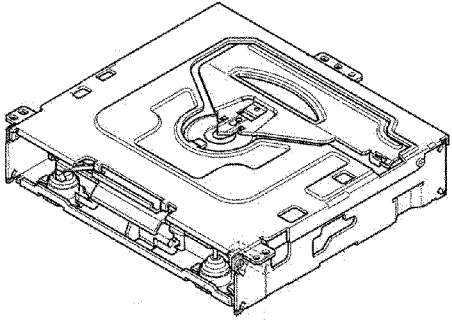

Deck Ass'y (Upper Side)

Caution

This Product utilizes a laser.

Use of controls or adjustments or performance of procedures other than those specified herein may result in hazardous radiation exposure.

Panasonic®

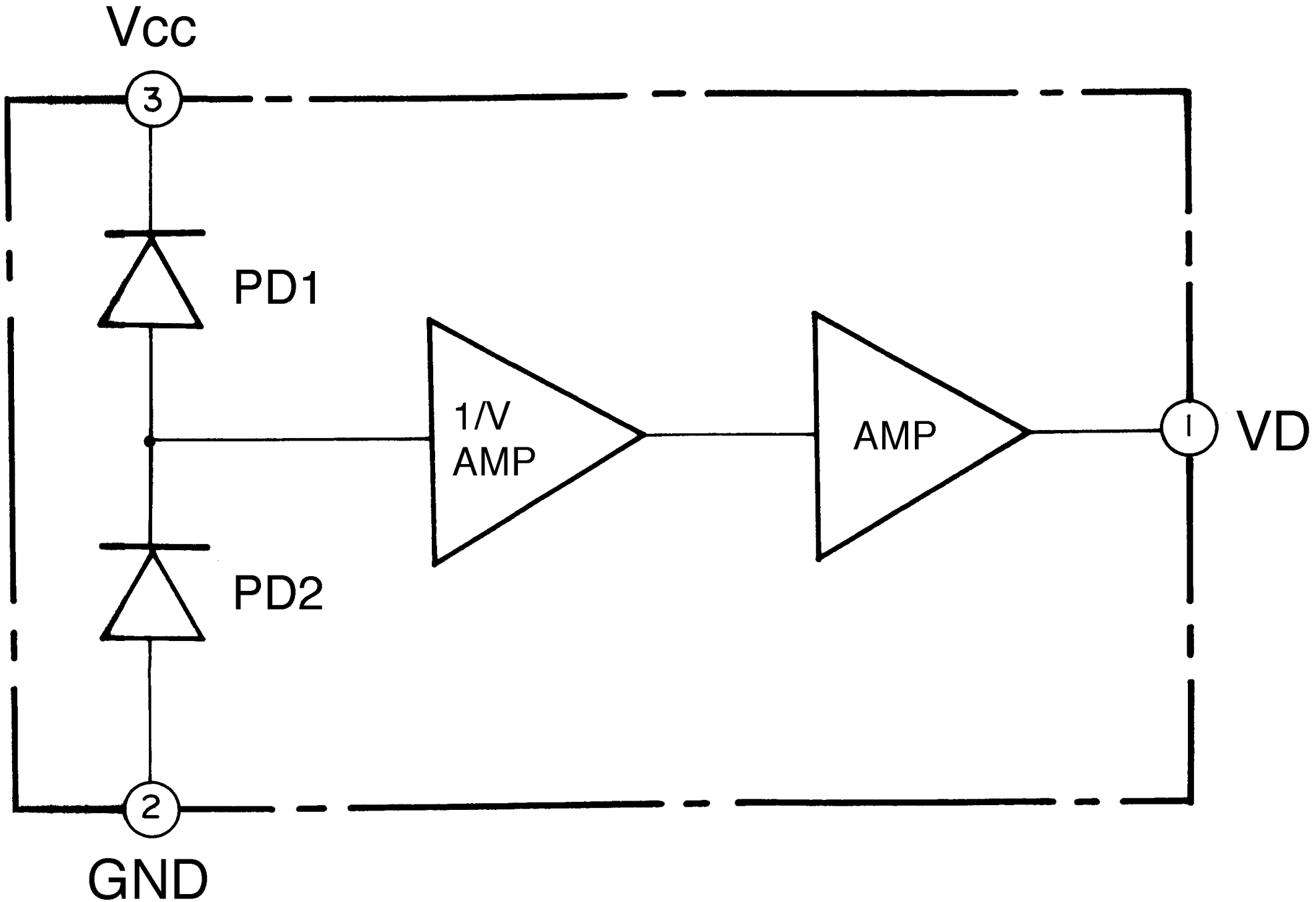
Vcc
3
PD1
1/V
AMP
AMP
1
VD
PD2
2
GND

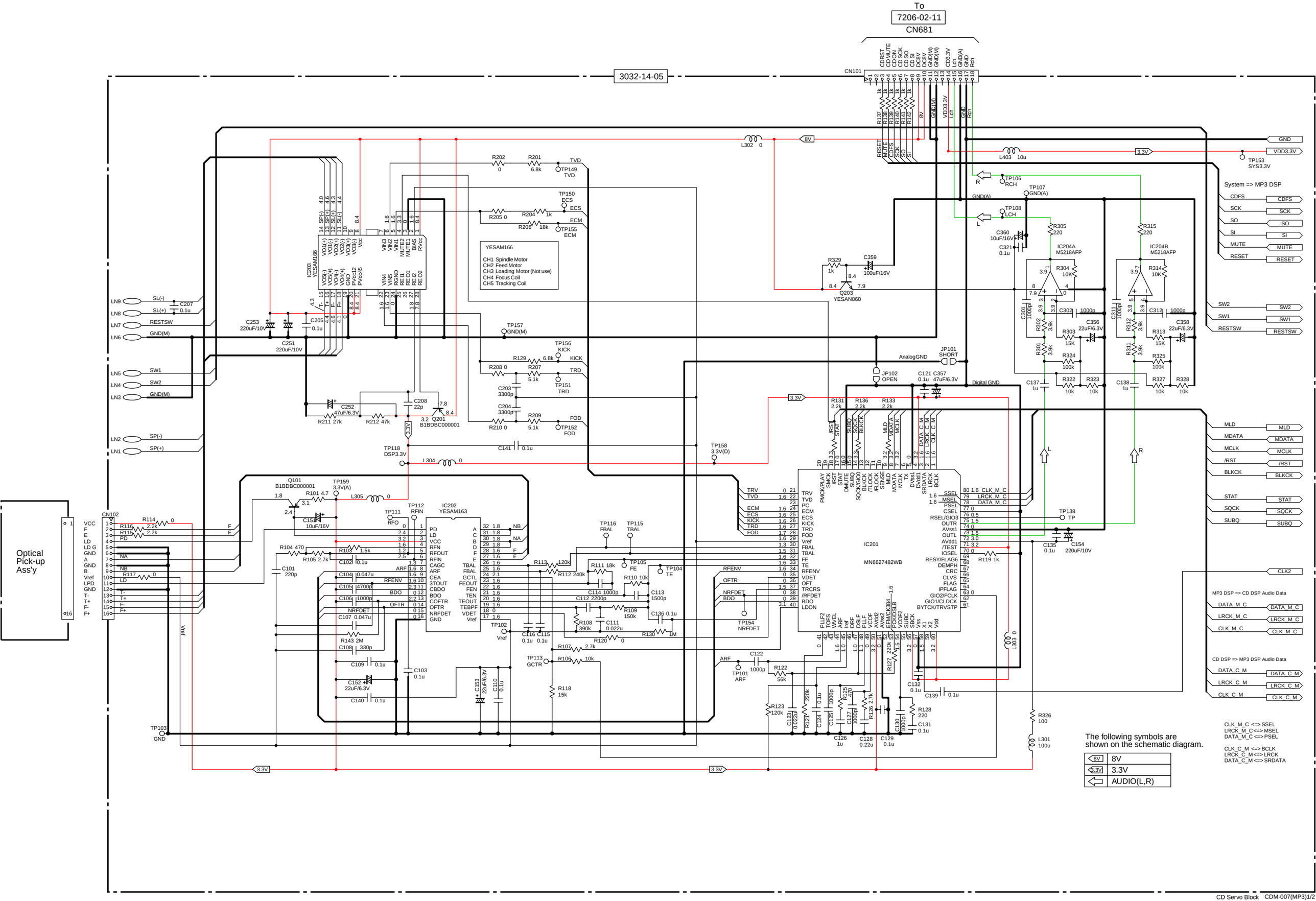
To
7206-02-11
CN681
3032-14-05
CN101
IC203
YESAM166
YESAM166
CH1 Spindle Motor
CH2 Feed Motor
CH3 Loading Motor (Not use)
CH4 Focus Coil
CH5 Tracking Coil
IC204A
M5218AFP
IC204B
M5218AFP
System => MP3 DSP
CDFS
SCK
SO
SI
MUTE
RESET
SW2
SW1
RESTSW
MLD
MDATA
MCLK
/RST
BLKCK
STAT
SQCK
SUBQ
CLK2
MP3 DSP => CD DSP Audio Data
DATA_M_C
LRCK_M_C
CLK_M_C
CD DSP => MP3 DSP Audio Data
DATA_C_M
LRCK_C_M
CLK_C_M
Optical Pick-up Ass'y
CN102
IC202
YESAM163
IC201
MN6627482WB
Q101
B1BDBC000001
Q201
B1BDBC000001
Q203
YESAN060
JP101
SHORT
JP102
OPEN
AnalogGND
Digital GND
GND
VDD3.3V
TP153
SYS3.3V
TP138
TP
TP118
DSP3.3V
TP158
3.3V(D)
TP159
3.3V(A)
TP103
GND
TP102
Vref
The following symbols are shown on the schematic diagram.
8V
3.3V
AUDIO(L,R)
CLK_M_C <=> SSEL
LRCK_M_C <=> MSEL
DATA_M_C <=> PSEL
CLK_C_M <=> BCLK
LRCK_C_M <=> LRCK
DATA_C_M <=> SRDATA

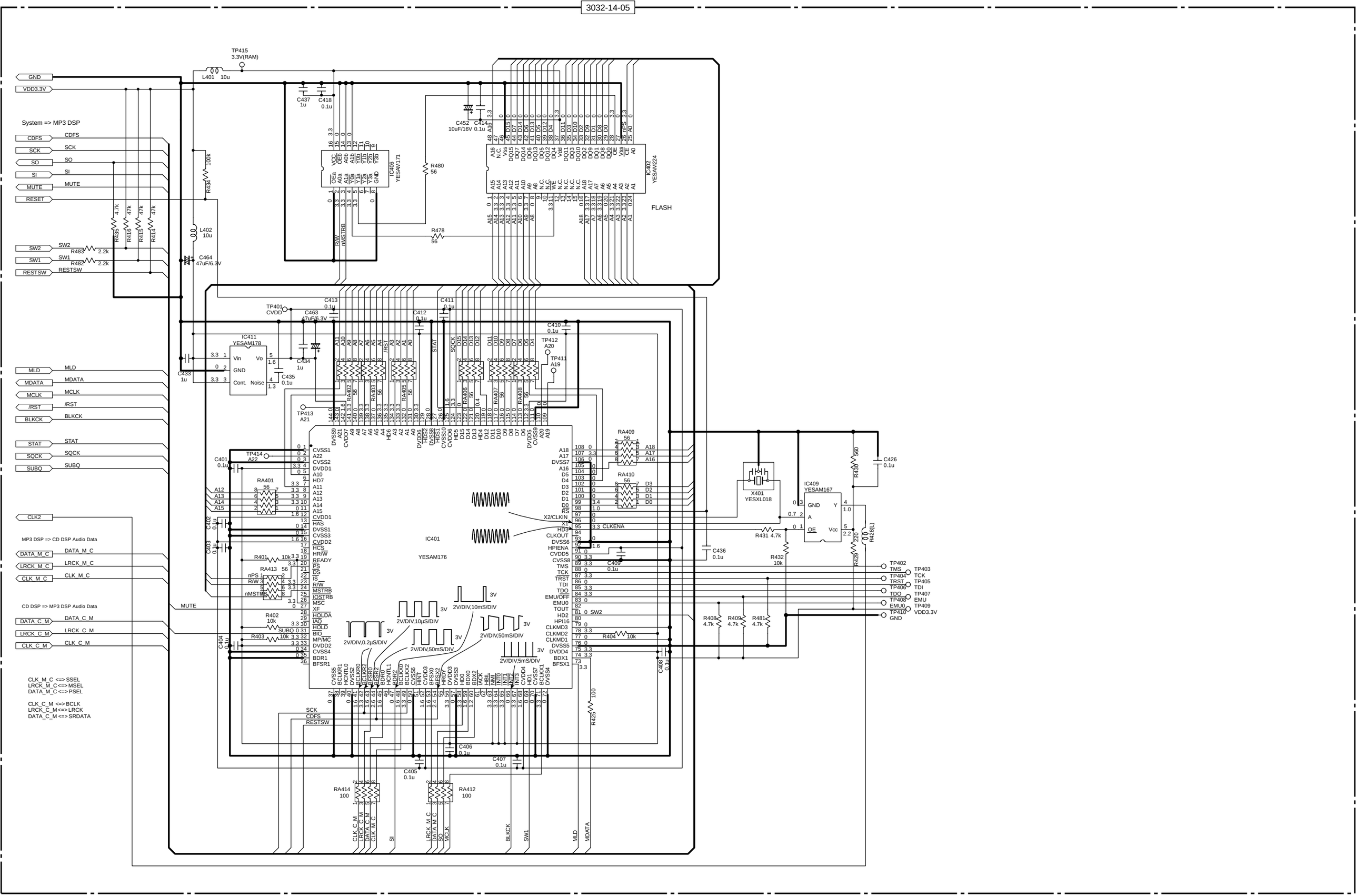
System => MP3 DSP
GND
VDD3.3V
CDFS
SCK
SO
SI
MUTE
RESET
SW2
SW1
RESTSW
MLD
MDATA
MCLK
/RST
BLKCK
STAT
SQCK
SUBQ
CLK2
MP3 DSP => CD DSP Audio Data
DATA_M_C
LRCK_M_C
CLK_M_C
CD DSP => MP3 DSP Audio Data
DATA_C_M
LRCK_C_M
CLK_C_M
CLK_M_C <=> SSEL
LRCK_M_C <=> MSEL
DATA_M_C <=> PSEL
CLK_C_M <=> BCLK
LRCK_C_M <=> LRCK
DATA_C_M <=> SRDATA
TP415
3.3V(RAM)
L401 10u
C437 1u
C418 0.1u
C452 10uF/16V
C414 0.1u
IC406
YESAM171
IC402
YESAM224
FLASH
R480 56
R478 56
R434 100k
L402 10u
C464 47uF/6.3V
R483 2.2k
R482 2.2k
R435 4.7k
R416 47k
R415 47k
R414 47k
TP401
CVDD
C463 47uF/6.3V
C413 0.1u
C411 0.1u
C412 0.1u
C410 0.1u
IC411
YESAM178
Vin
Vo
GND
Cont.
Noise
C433 1u
C434 1u
C435 0.1u
TP412
A20
TP411
A19
TP413
A21
TP414
A22
C401 0.1u
C402 0.1u
C403 0.1u
C404 0.1u
RA401 56
RA413 56
R401 10k
R402 10k
R403 10k
IC401
YESAM176
RA409 56
RA410 56
X401
YESXL018
IC409
YESAM167
R430 560
C426 0.1u
R431 4.7k
R432 10k
R429 220
R428(L)
C436 0.1u
C409 0.1u
R404 10k
R408 4.7k
R409 4.7k
R481 4.7k
C408 0.1u
TP402
TMS
TP403
TCK
TP404
TRST
TP405
TDI
TP406
TDO
TP407
EMU
TP408
EMU0
TP409
VDD3.3V
TP410
GND
2V/DIV,10μS/DIV
2V/DIV,0.2μS/DIV
2V/DIV,50mS/DIV
2V/DIV,10mS/DIV
2V/DIV,5mS/DIV
3V
RA414 100
RA412 100
R425 100
C406 0.1u
C405 0.1u
C407 0.1u

16.3. CD Servo Block-1

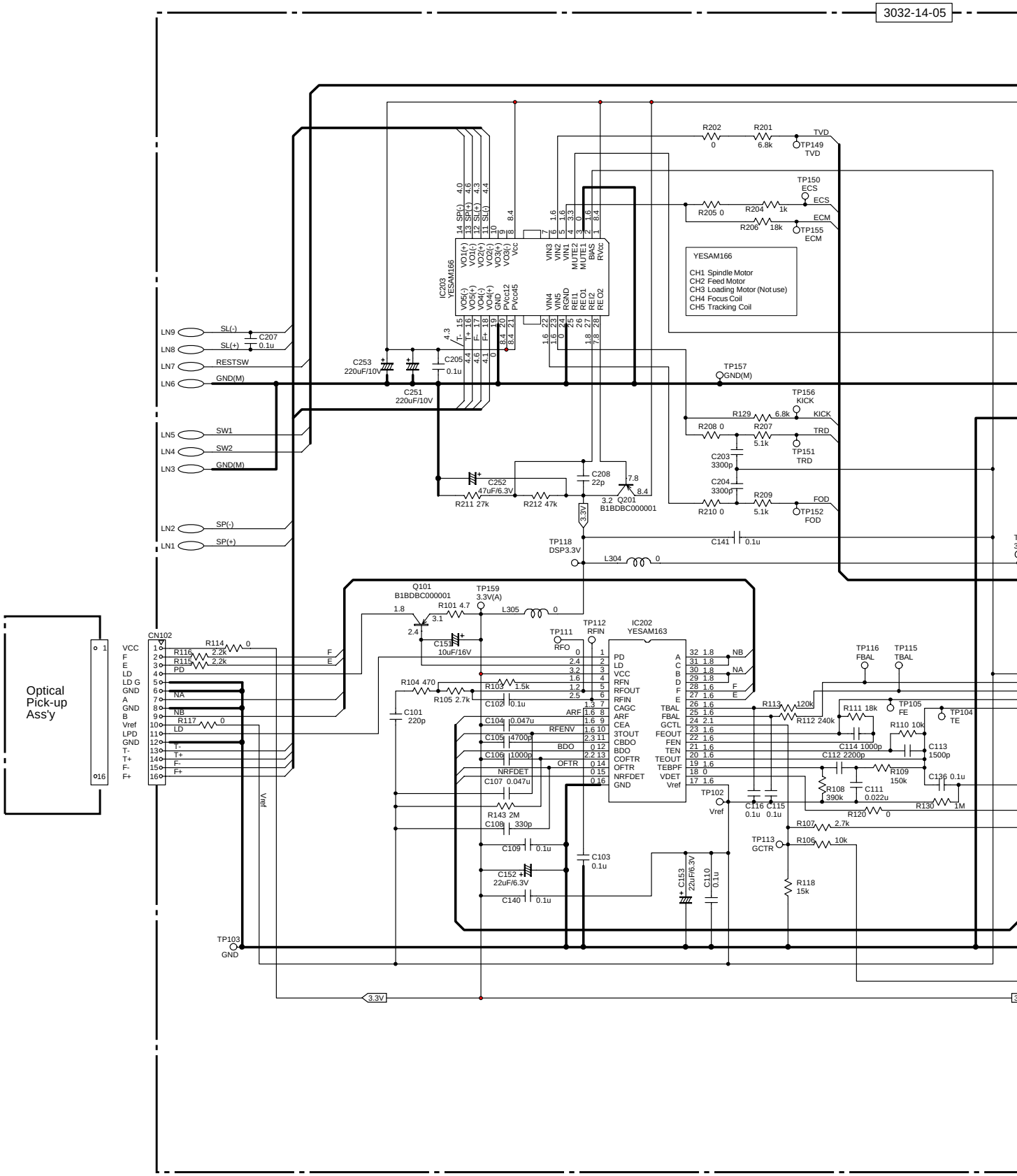

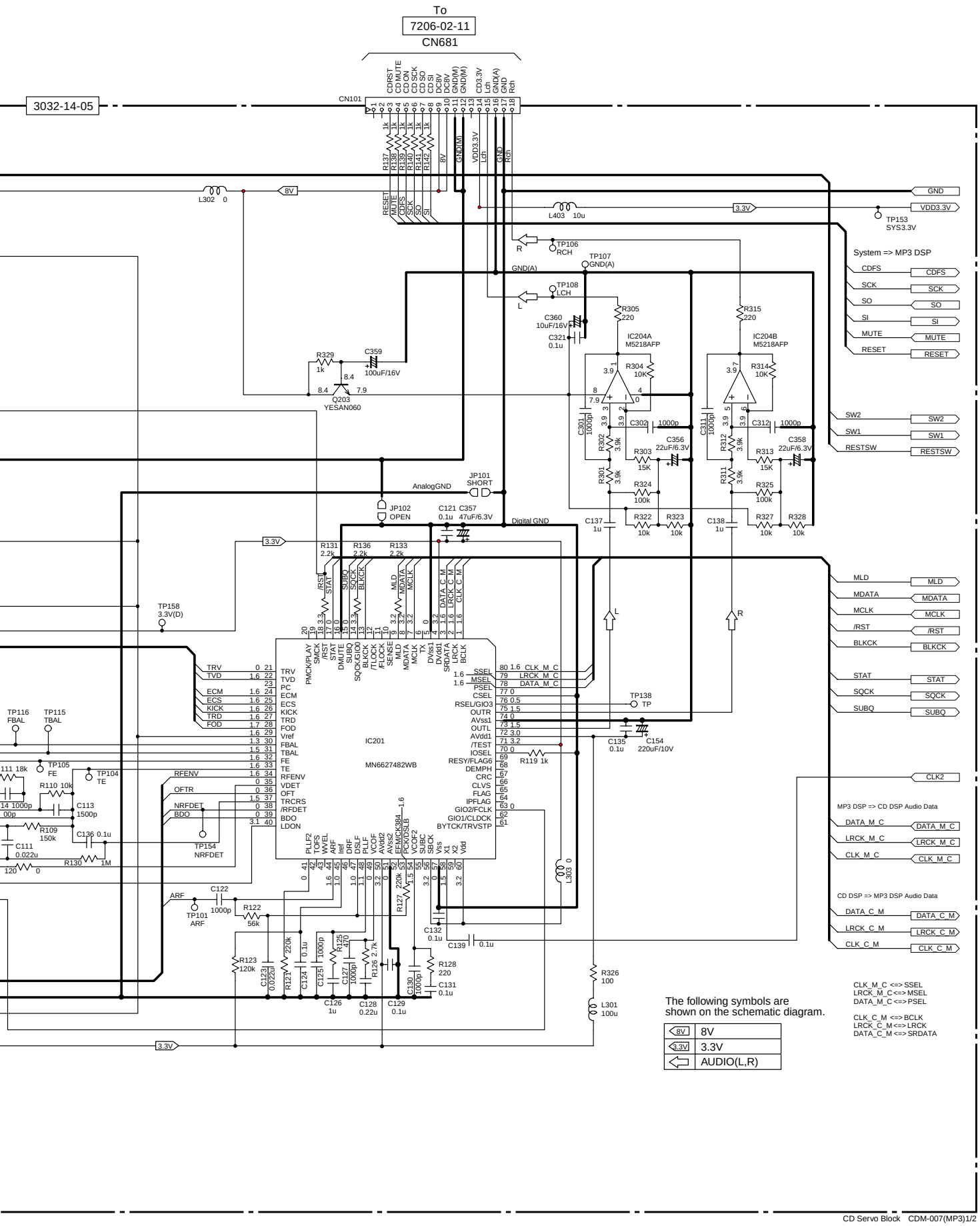
To
7206-02-11
CN681
3032-14-05
CN101
CDRST
CD MUTE
CD ON
CD SCK
CD SO
CD SI
DC9V
DC8V
GND(M)
GND(M)
CD3.3V
Lch
GND(A)
GND
Rch
R137 1k
R138 1k
R139 1k
R140 1k
R141 1k
R142 1k
8V
GND(M)
VDD3.3V
Lch
GND
Rch
RESET
MUTE
CDFS
SCK
SO
SI
L302 0
8V
L403 10u
3.3V
GND
VDD3.3V
TP153
SYS3.3V
TP106
RCH
TP107
GND(A)
GND(A)
TP108
LCH
System => MP3 DSP
CDFS
SCK
SO
SI
MUTE
RESET
C360
10uF/16V
C321
0.1u
R305
220
R315
220
IC204A
M5218AFP
IC204B
M5218AFP
R304
10K
R314
10K
R329
1k
C359
100uF/16V
Q203
YESAN060
C301
1000pf
R302
3.9k
C302
1000p
C356
22uF/6.3V
R303
15K
C311
1000pf
R312
3.9k
C312
1000p
C358
22uF/6.3V
R313
15K
SW2
SW1
RESTSW
R301
3.9k
R324
100k
R311
3.9k
R325
100k
JP101
SHORT
AnalogGND
JP102
OPEN
C121
0.1u
C357
47uF/6.3V
Digital GND
C137
1u
R322
10k
R323
10k
C138
1u
R327
10k
R328
10k
3.3V
R131
2.2k
R136
2.2k
R133
2.2k
/RST
STAT
SUBQ
SQCK
BLKCK
MLD
MDATA
MCLK
DATA_C_M
LRCK_C_M
CLK_C_M
MLD
MDATA
MCLK
/RST
BLKCK
STAT
SQCK
SUBQ
TP158
3.3V(D)
PMCK/PLAY
SMCK
/RST
STAT
DMUTE
SUBQ
SQCK/GIO0
BLKCK
/TCLOCK
/FLOCK
SENSE
MLD
MDATA
MCLK
TX
DVss1
DVdd1
SRDATA
LRCK
BCLK
TRV
TVD
ECM
ECS
KICK
TRD
FOD
TRV
TVD
PC
ECM
ECS
KICK
TRD
FOD
Vref
FBAL
TBAL
FE
TE
RFENV
VDET
OFT
TRCRS
/RFDET
BDO
LDON
SSEL
MSEL
PSEL
CSEL
RSEL/GIO3
OUTR
AVss1
OUTL
AVdd1
/TEST
IOSEL
RESY/FLAG6
DEMPH
CRC
CLVS
FLAG
IPFLAG
GIO2/FCLK
GIO1/CLDCK
BYTCK/TRVSTP
CLK_M_C
LRCK_M_C
DATA_M_C
TP138
TP
C135
0.1u
C154
220uF/10V
R119 1k
IC201
MN6627482WB
TP116
FBAL
TP115
TBAL
TP105
FE
TP104
TE
R110 10k
C113
1500p
R109
150k
C136 0.1u
C111
0.022u
R130 1M
TP154
NRFDET
RFENV
OFTR
NRFDET
BDO
PLLF2
TCRS
WVEL
ARF
Iref
DRF
DSLF
PLLF
/TCOF
AVcf2
AVss2
EFMCK384
PCK/DSLB
VCOF2
SUBC
SBCK
Vss
X1
X2
Vdd
R127 220k
L303 0
CLK2
MP3 DSP => CD DSP Audio Data
DATA_M_C
LRCK_M_C
CLK_M_C
CD DSP => MP3 DSP Audio Data
DATA_C_M
LRCK_C_M
CLK_C_M
ARF
C122
1000p
TP101
ARF
R122
56k
C132
0.1u
C139
0.1u
R123
120k
C123
0.022u
R121
220k
C124
0.1u
C125
1000p
R125
470
C127
1000p
R126 2.7k
C130
1000p
R128
220
C131
0.1u
C126
1u
C128
0.22u
C129
0.1u
R326
100
L301
100u
3.3V
CLK_M_C <=> SSEL
LRCK_M_C <=> MSEL
DATA_M_C <=> PSEL
CLK_C_M <=> BCLK
LRCK_C_M <=> LRCK
DATA_C_M <=> SRDATA
The following symbols are shown on the schematic diagram.
8V
8V
3.3V
3.3V
AUDIO(L,R)

16.4. CD Servo Block-2

3032-14-05

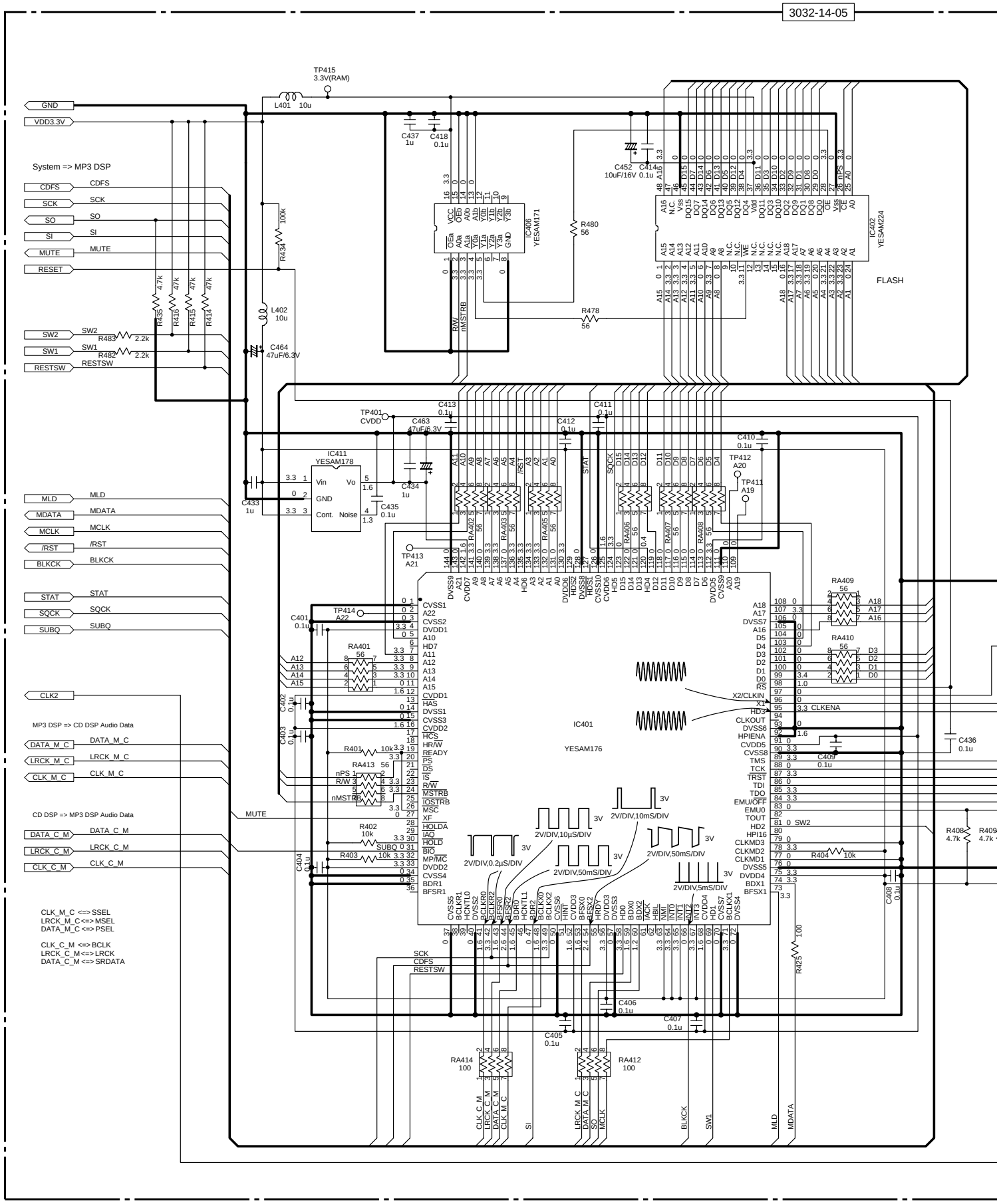

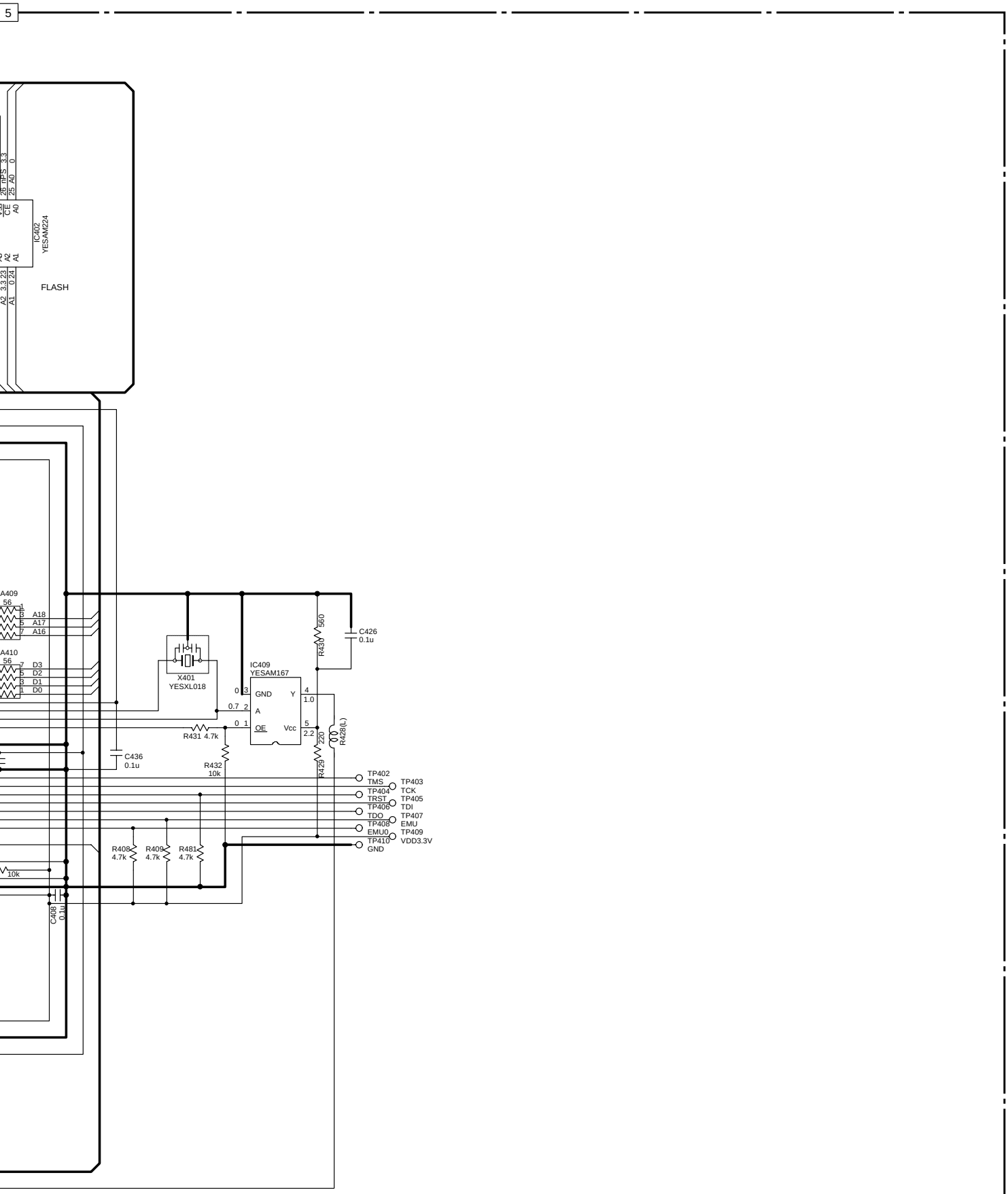

CD Servo Block CDM-007(MP3)2/2

16.2. Display Block

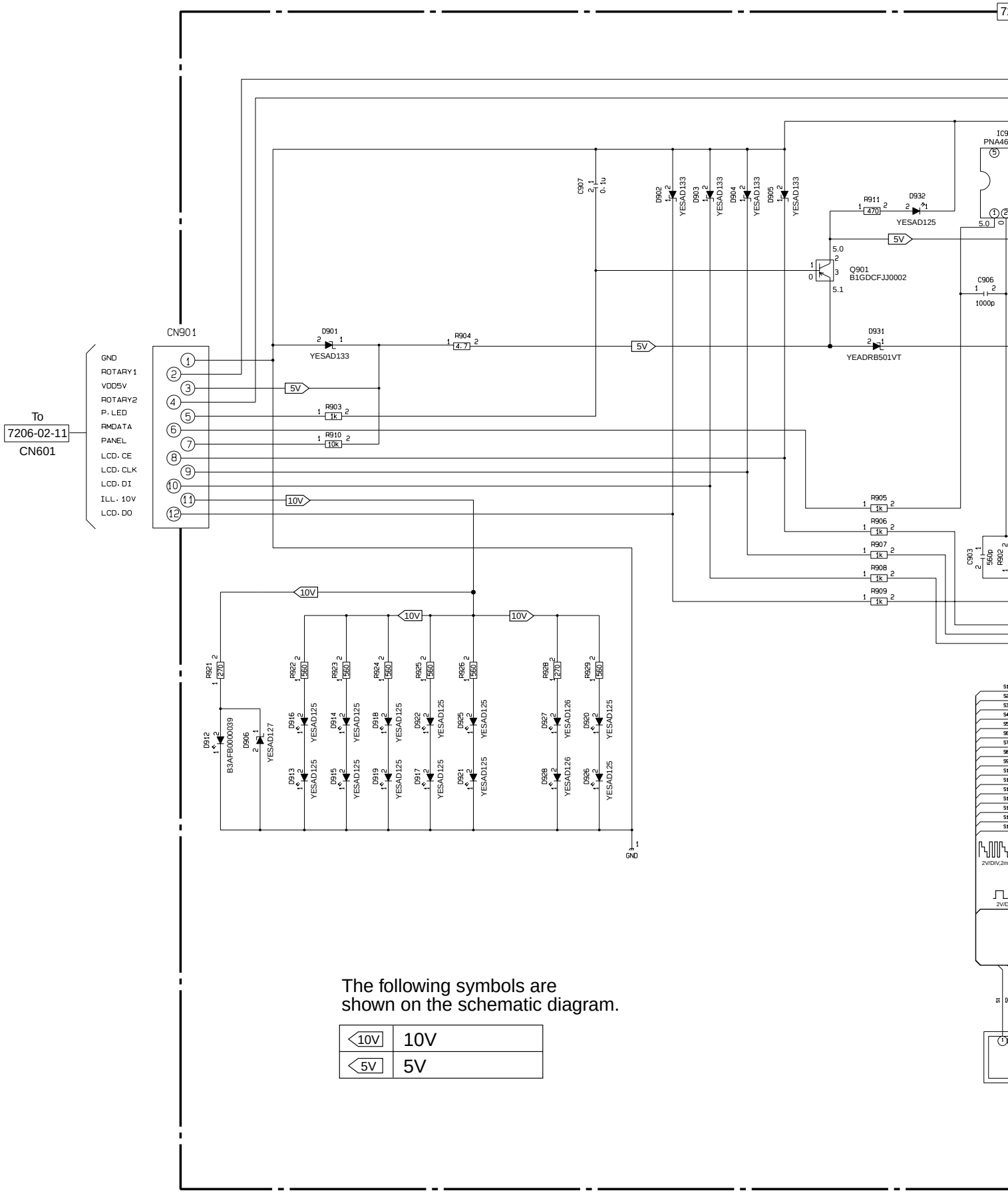

The following symbols are shown on the schematic diagram.

10V	10V
5V	5V

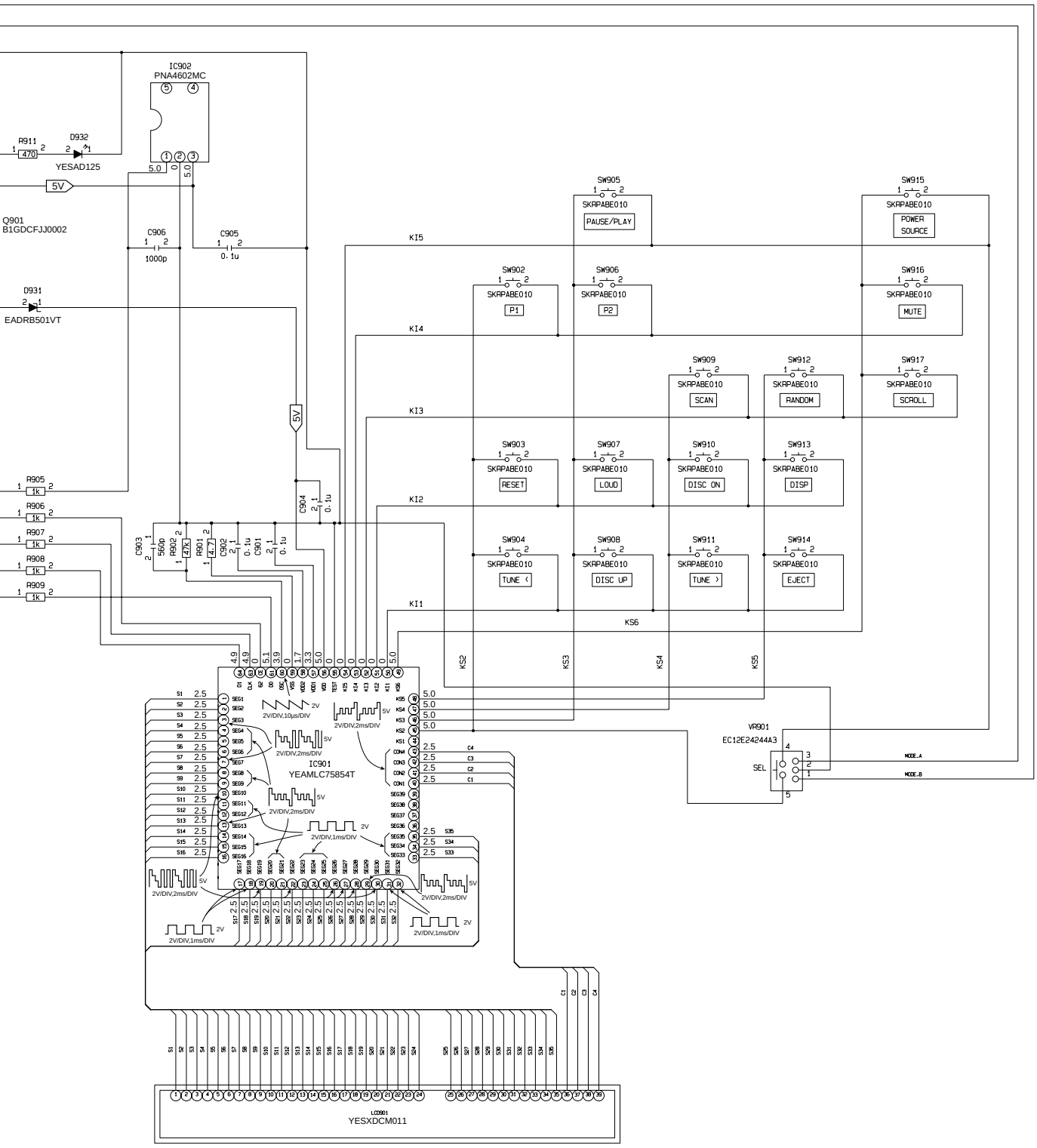
IC902
PNA4602MC
R911
470
D932
YESAD125
5V
Q901
B1GDCFJJ0002
C906
1000p
C905
0.1u
D931
EADRB501VT
R905
R906
R907
R908
R909
1k
C903
560p
R902
47k
R901
4.7
C902
0.1u
C901
0.1u
C904
0.1u
SW905
SKRPABE010
PAUSE/PLAY
SW915
POWER SOURCE
SW902
P1
SW906
P2
SW916
MUTE
SW909
SCAN
SW912
RANDOM
SW917
SCROLL
SW903
RESET
SW907
LOUD
SW910
DISC ON
SW913
DISP
SW904
TUNE 〈
SW908
DISC UP
SW911
TUNE 〉
SW914
EJECT
KI5
KI4
KI3
KI2
KI1
KS6
KS2
KS3
KS4
KS5
VR901
EC12E24244A3
SEL
MODE_A
MODE_B
IC901
YEAMLC75854T
2V/DIV,10μs/DIV
2V/DIV,2ms/DIV
2V/DIV,1ms/DIV
LCD901
YESXDCM011

16 SCHEMATIC DIAGRAM

16.1. Main Block

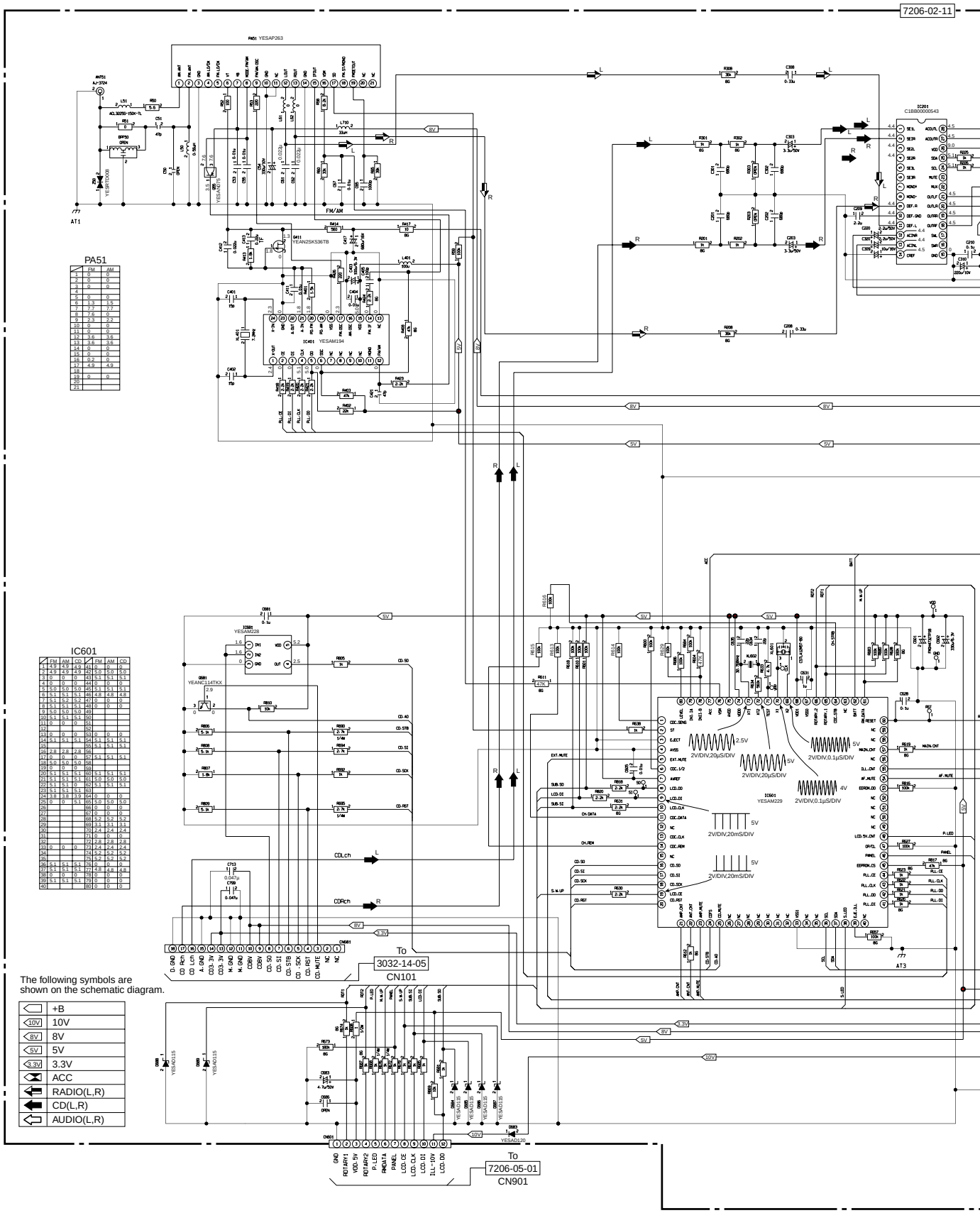

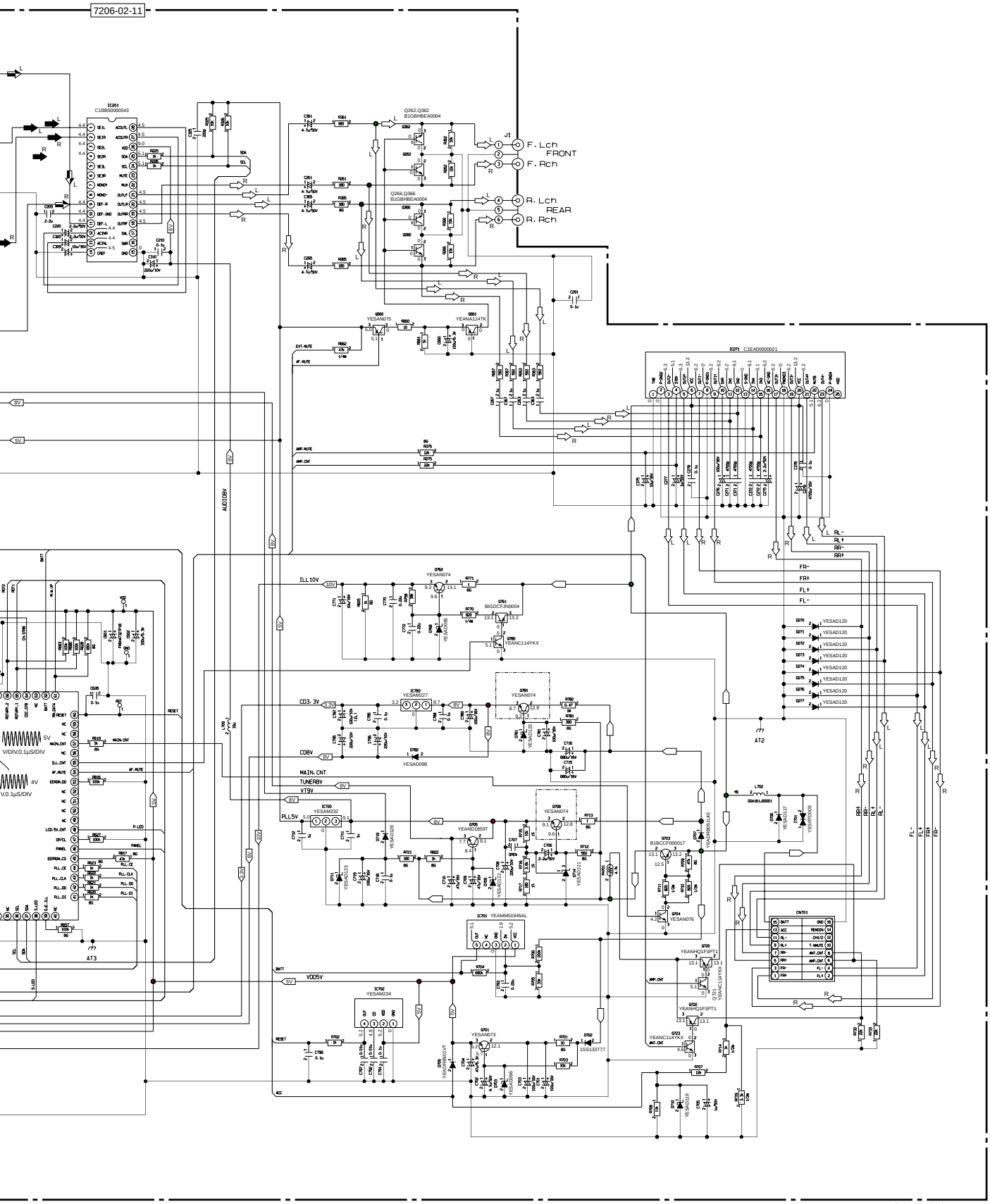

CQ-C1300W MAIN

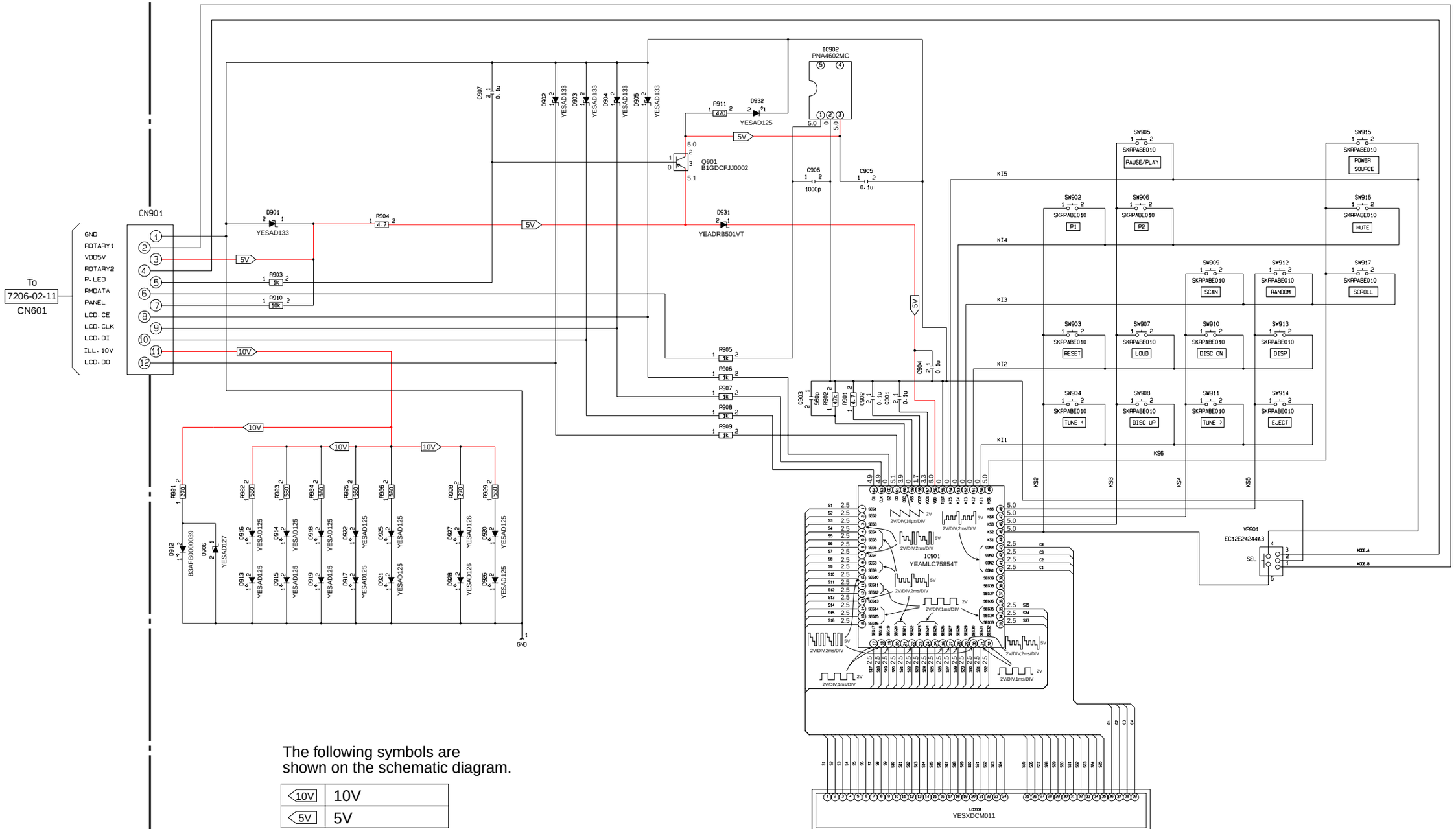

The following symbols are shown on the schematic diagram.

10V	10V
5V	5V

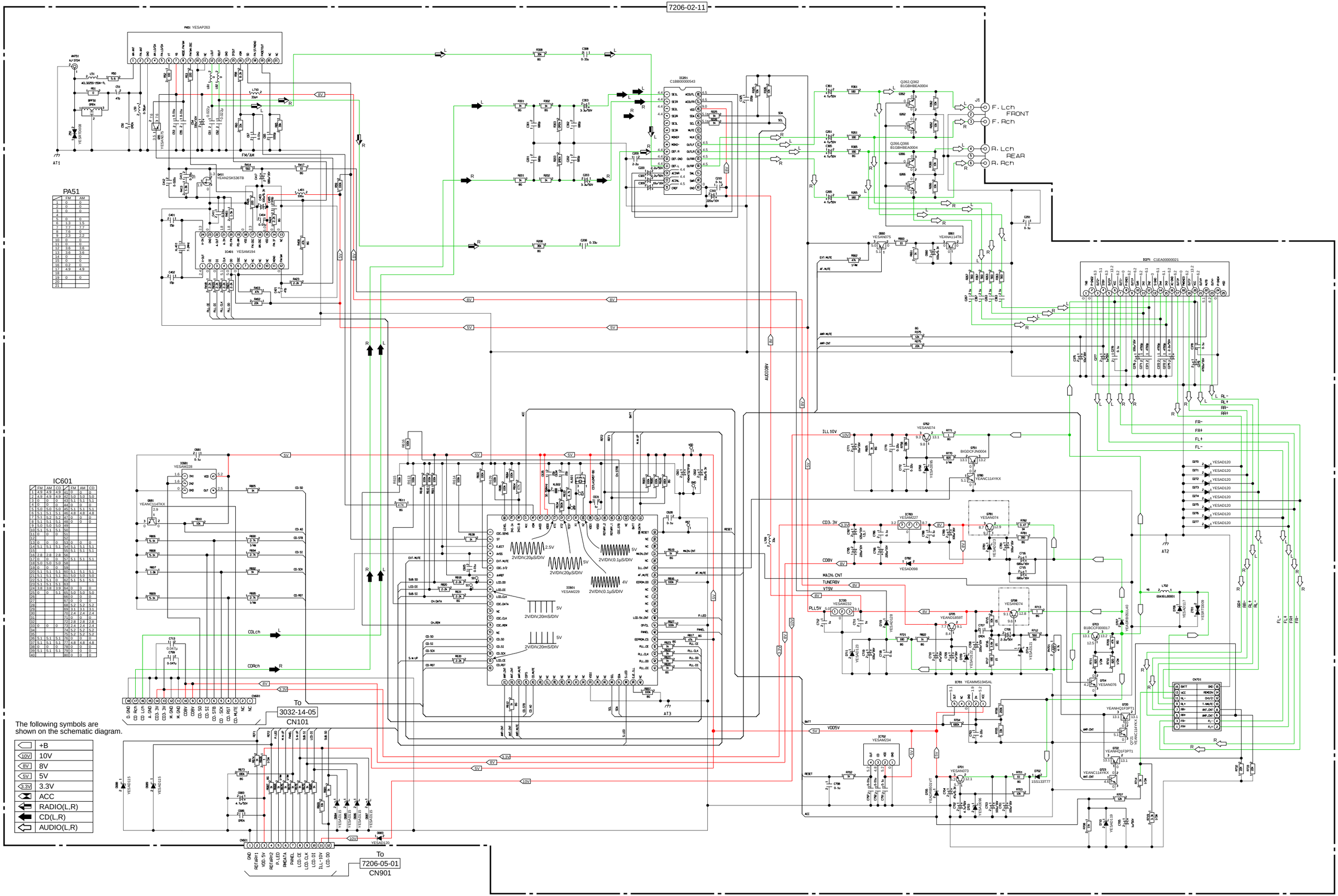
PA51 YESAP263
IC201 C1BB00000543
IC401 YESAM194
IC601 YESAM229
IC701 YEAMM5194SAL
IC702 YESAM234
IC703 YESAM227
IC706 YESAM232
IC801 YESAM228
Q262,Q362 B1GBHBEA0004
Q266,Q366 B1GBHBEA0004
Q411 YEAN25K536TB
Q661 YEANA114TK
Q662 YESAN075
Q762 YESAN074
Q764 BIGDCF2N0004
Q780 YEANC114YKX
Q781 YESAN074
Q782 YESAD098
Q783 B1BCCF000017
Q784 YESAN076
Q785 YEAND1859T
Q786 YESAN074
Q801 YEANC114TKX
Q701 YESAN073
Q702 YEANHQ1F3PT1
Q703 YEANC1147KX
Q704 YEANHQ1F3PT1
Q721 YEANC1147KX
Q722 YEANC1147KX
Q723 YEANC1147KX
Q724 YEANC1147KX
Q725 YEANC1147KX
Q726 YEANC1147KX
Q727 YEANC1147KX
Q728 YEANC1147KX
Q729 YEANC1147KX
Q730 YEANC1147KX
Q731 YEANC1147KX
Q732 YEANC1147KX
Q733 YEANC1147KX
Q734 YEANC1147KX
Q735 YEANC1147KX
Q736 YEANC1147KX
Q737 YEANC1147KX
Q738 YEANC1147KX
Q739 YEANC1147KX
Q740 YEANC1147KX

Supplement

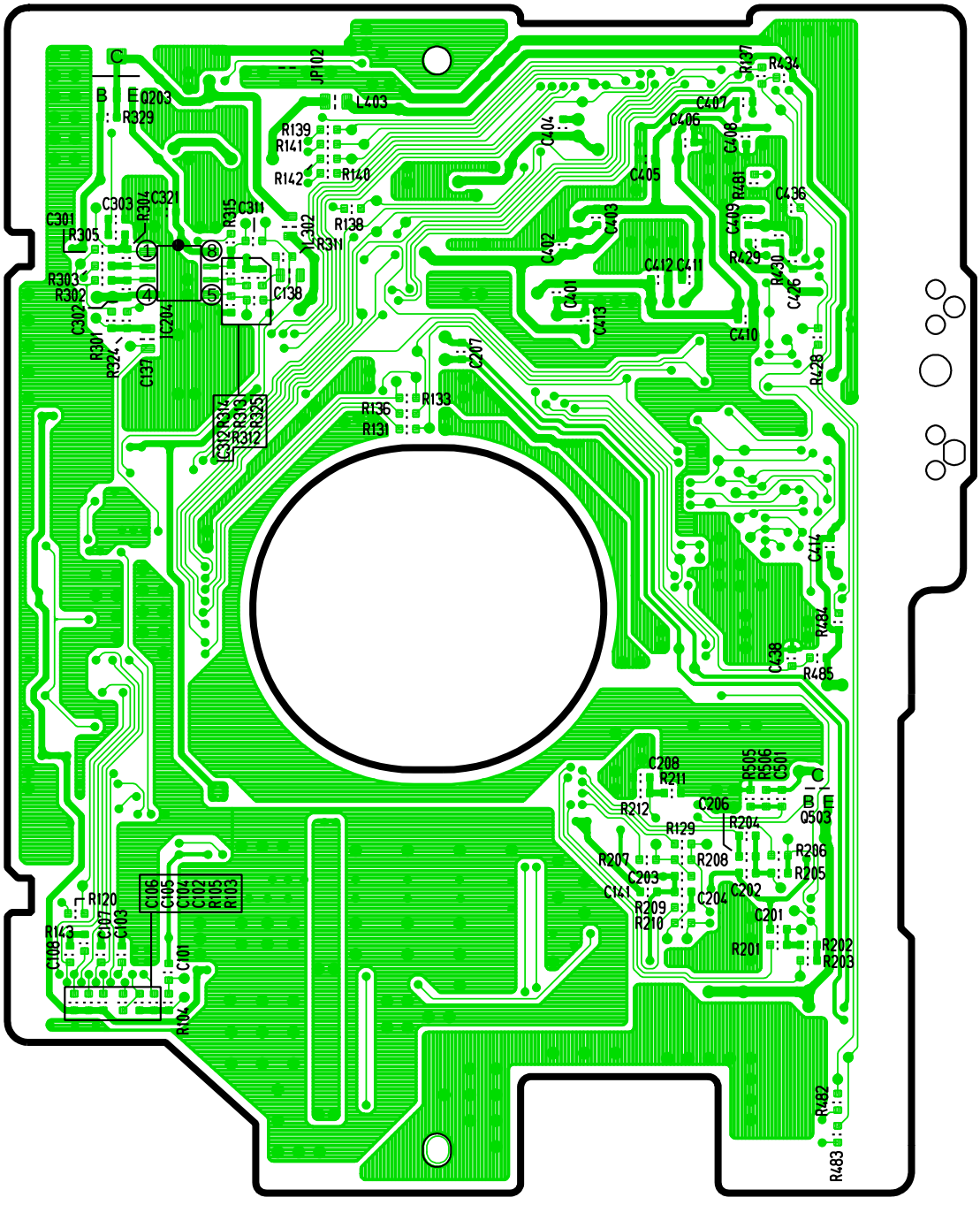

[3032-14-05] [Bottom View]

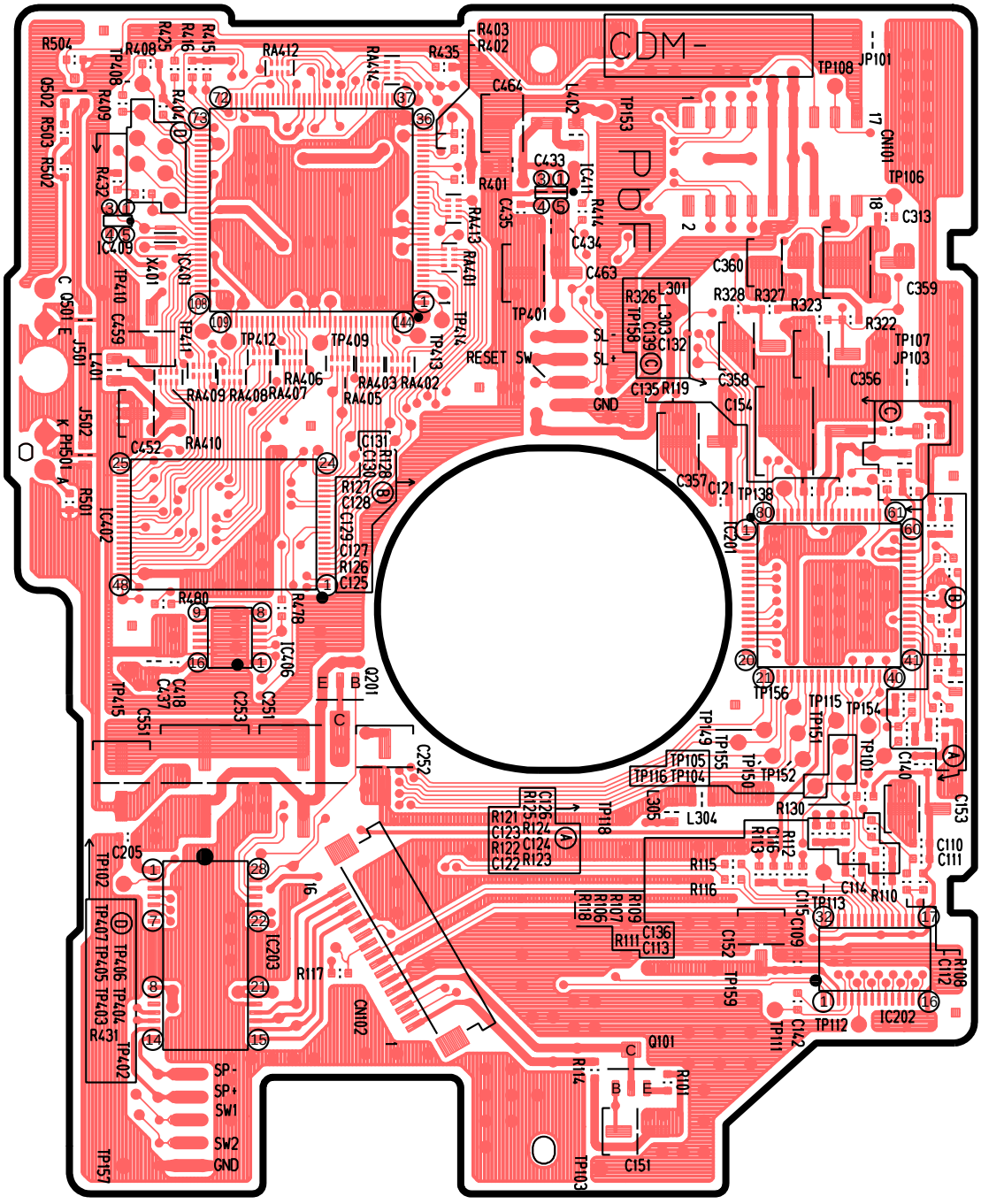

[3032-14-05] [Top View]

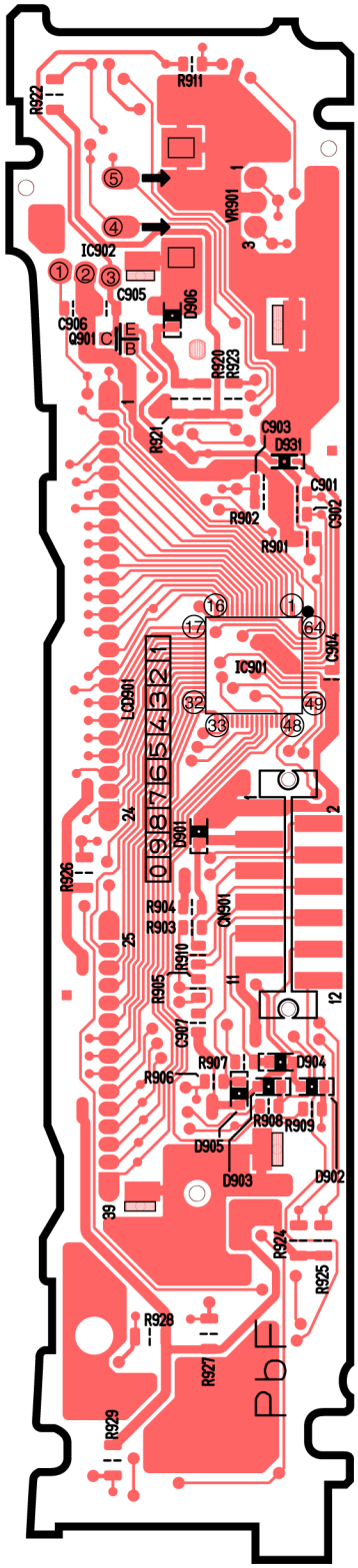

[7206-05-01] [Top View]

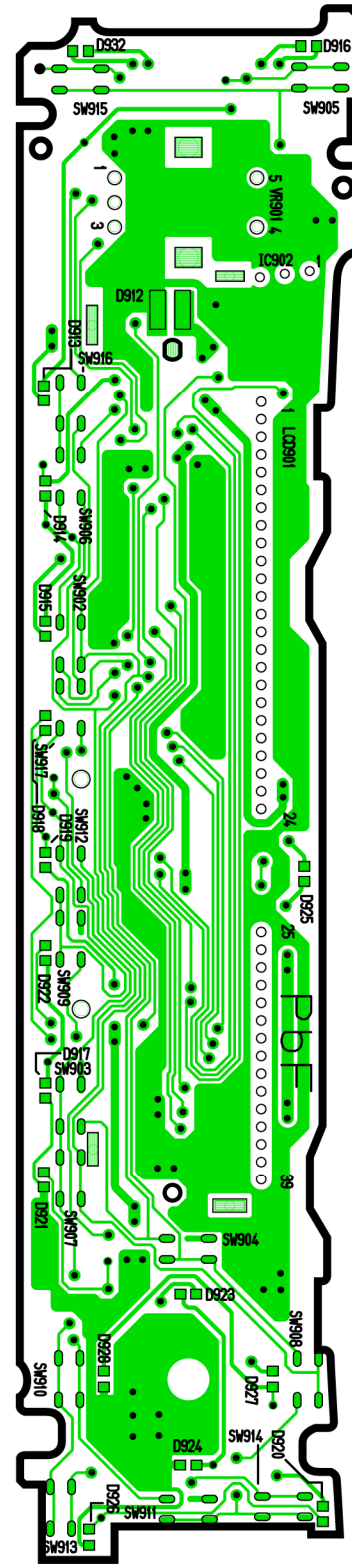

[7206-05-01] [Bottom View]

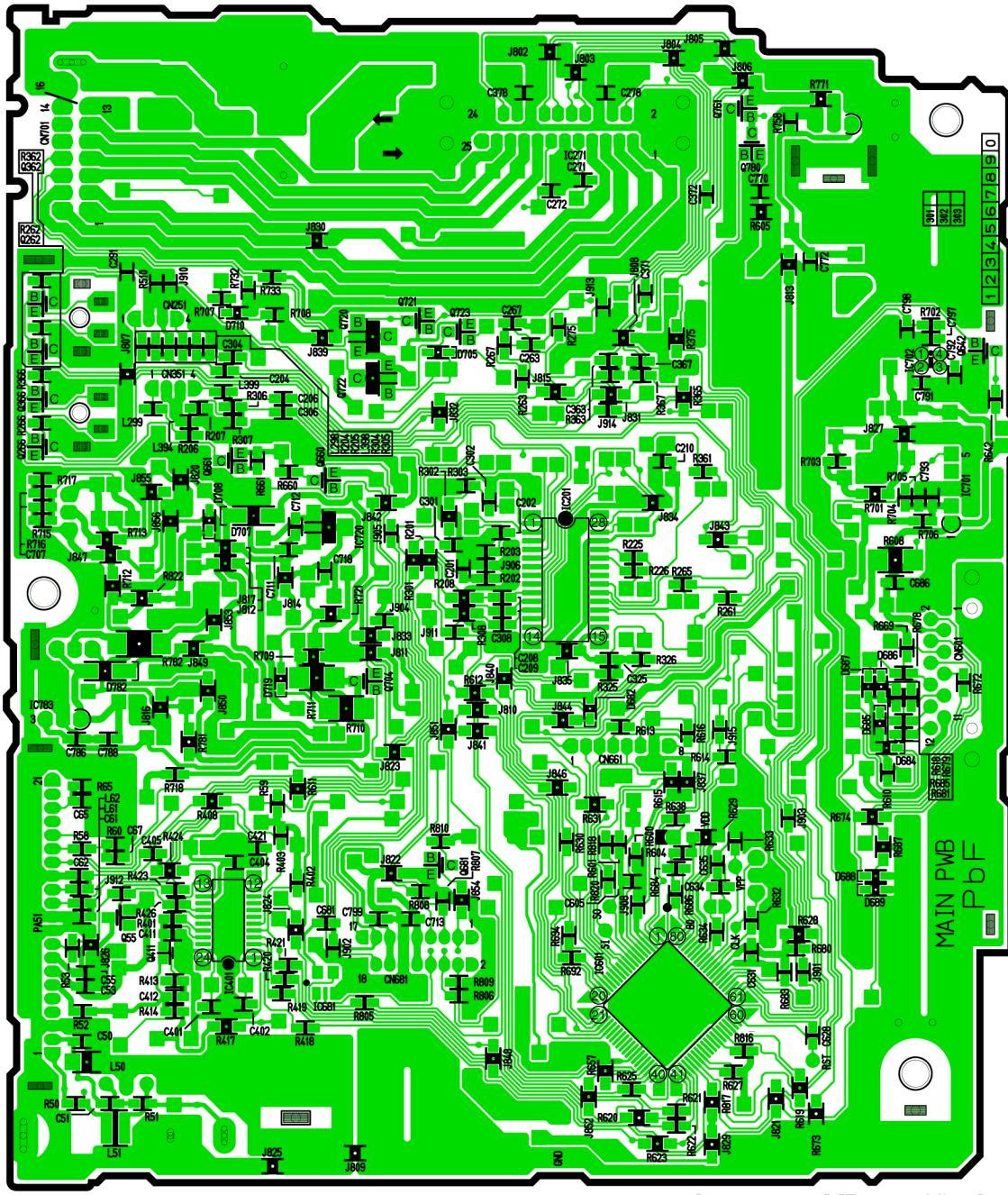

[7206-02-11] [Bottom View]

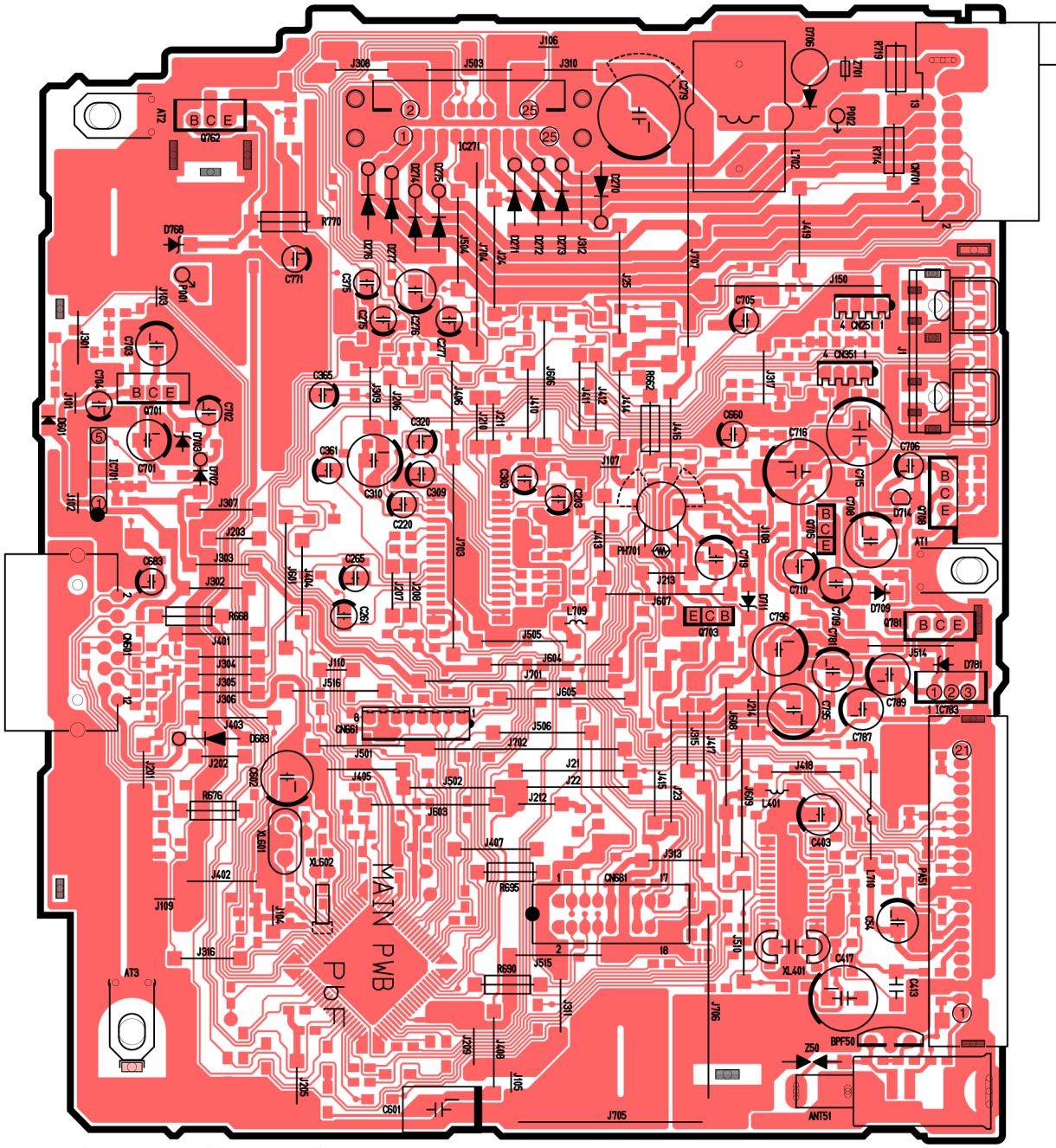

[7206-02-11] [Top View]

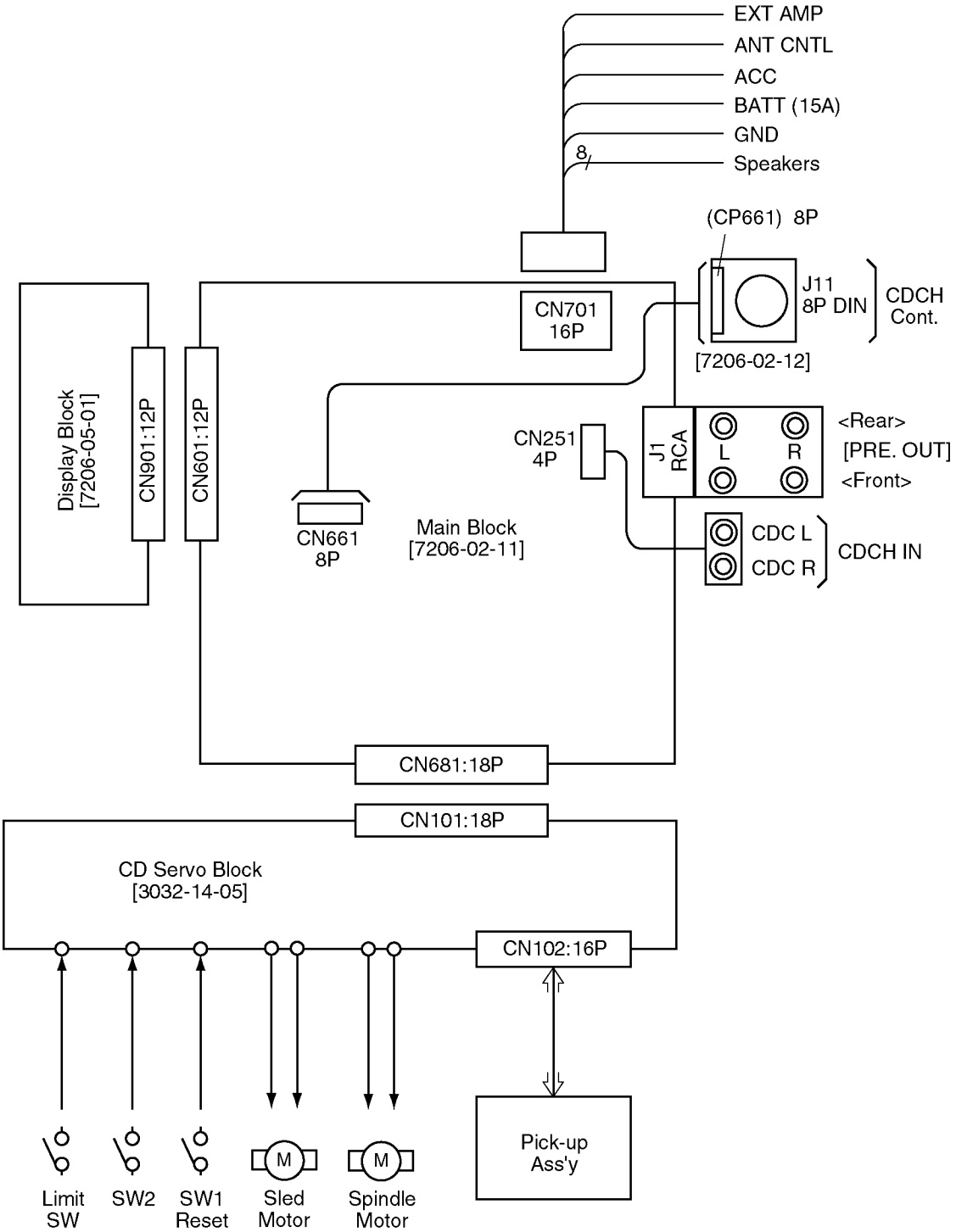
EXT AMP
ANT CNTL
ACC
BATT (15A)
GND
8
Speakers
(CP661) 8P
J11
8P DIN
CDCH
Cont.
[7206-02-12]
CN701
16P
Display Block
[7206-05-01]
CN901:12P
CN601:12P
CN251
4P
J1
RCA
L
R
<Rear>
[PRE. OUT]
<Front>
CN661
8P
Main Block
[7206-02-11]
CDC L
CDC R
CDCH IN
CN681:18P
CN101:18P
CD Servo Block
[3032-14-05]
CN102:16P
Pick-up
Ass'y
Limit
SW
SW2
SW1
Reset
M
Sled
Motor
M
Spindle
Motor