CIRCUIT A.W.A. TELEVISION RECEIVER CHASSIS – 50-00 SERIES

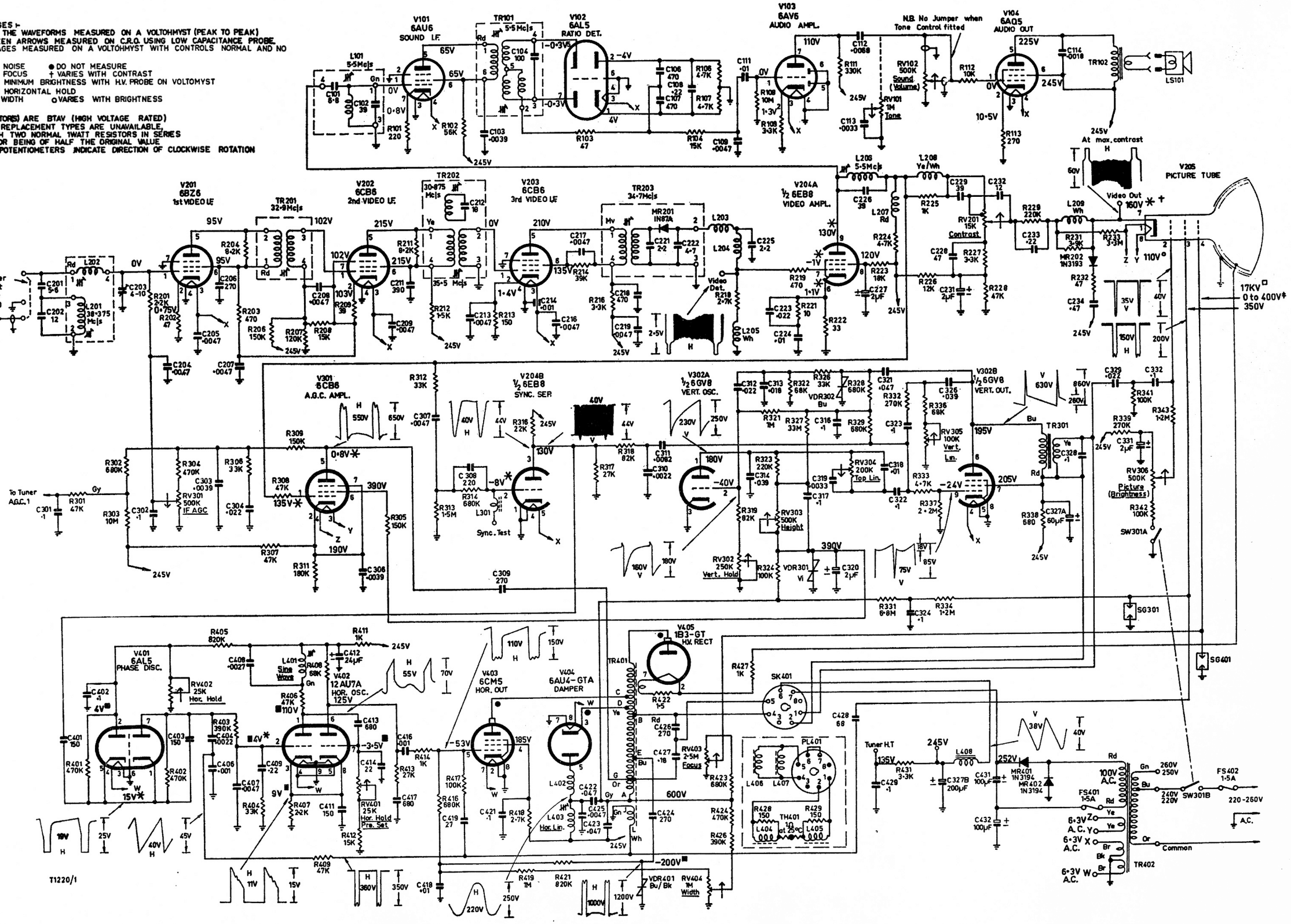

CIRCUIT A.W.A. TELEVISION RECEIVER CHASSIS — 50-00 SERIES

2nd Edition August, 1969

NOTES

① WAVEFORM VOLTAGES :-
VOLTAGES WITHIN THE WAVEFORMS MEASURED ON A VOLTOHMYST (PEAK TO PEAK)
VOLTAGES BETWEEN ARROWS MEASURED ON C.R.O. USING LOW CAPACITANCE PROBE.

② ALL VALVE VOLTAGES MEASURED ON A VOLTOHMYST WITH CONTROLS NORMAL AND NO SIGNAL INPUT

✳ VARIES WITH NOISE ● DO NOT MEASURE
‡ VARIES WITH FOCUS † VARIES WITH CONTRAST
□ MEASURED AT MINIMUM BRIGHTNESS WITH H.V. PROBE ON VOLTOMYST
▣ VARIES WITH HORIZONTAL HOLD
⊠ VARIES WITH WIDTH ○ VARIES WITH BRIGHTNESS

③ ARROWS ON POTENTIOMETERS INDICATE DIRECTION OF CLOCKWISE ROTATION

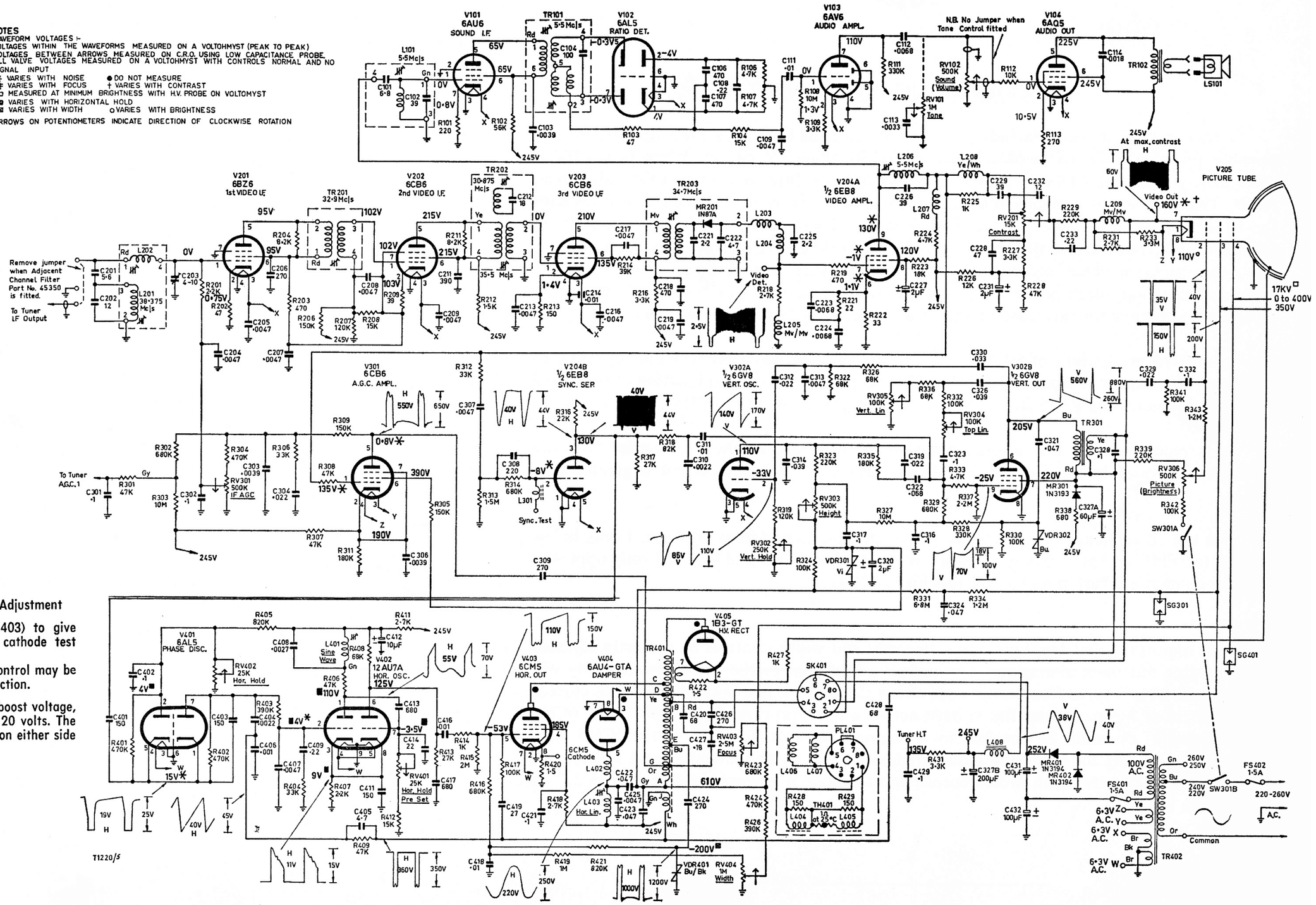

Revised Horizontal Linearity and Width Adjustment

Adjust the horizontal linearity coil (L403) to give minimum voltage reading at the 6CM5 cathode test point (across R420).

N.B.—From this position the linearity control may be set no more than two turns in either direction.

Set the width control (RV404) to give B boost voltage, at junction of C422 and C423, of 610 ± 20 volts. The width should not overscan more than ¾" on either side with nominal 240 volts mains.

50 SERIES CIRCUIT IMPROVEMENT

Under some conditions including incorrect width and horizontal linearity settings, it is possible for high EHT to be developed in the 50 series TV chassis. When high EHT is generated, greater than 18KV (zero beam) premature failure of EHT rectifier valves may result. This failure will normally burn up R427 lk ohm ½w resistor, which is in series with the EHT lead. In some cases in the field, because of wax being noted as having dropped from the EHT transformer, the transformer, as well as the EHT rectifier and the lk resistor, has been replaced. Our observations have shown that wax dripping from the EHT transformer, is not often an indication of transformer failure. Our tests on transformers replaced as defective for this reason indicate that the majority are in no way defective.

In current production of 50 series chassis, this problem has been overcome by addition of a 68pf 4Kv capacitor from cathode of 6AU4–GTA valve (pin 3) to junction of C426 and C427 and by increasing R415 from 1meg to 2.2meg (grid resistor on 6CM5).

It is recommended that above alterations be carried out whenever earlier 50 series chassis are serviced in the field, in which the EHT at zero beam current is greater than 18KV.

For the convenience of our clients, these parts are available in kit form, 1 only lk ½w resistor for EHT socket – 1 only 2.2meg ½w resistor for 6CM5 grid leak – 1 only 68pf 4Kv ceramic condenser. Part number for this kit is 47047

It is important that the horizontal linearity and width controls be correctly adjusted after carrying out these alterations. The correct adjustment of the horizontal linearity will be not more than 2 turns from minimum current through the line output valve. This current can be checked by measuring the voltage across a 1.5 ohm resistor inserted in the 6CM5 cathode circuit, or could be checked by inserting a 12 volt dial light in the 6CM5 plate circuit and adjusting for minimum globe brightness. The width control should be adjusted for 610 volts ± 20 volts which should correspond to about ¾" overscan either side on 23" or 25" picture tube.