Clarion

SERVICE MANUAL

Closer Relations through "CLARION SERVICE MANUAL"

MODEL AU-802B

Manufacturer CLARION CO., LTD. / Export Division CLARION SHOJI CO., LTD.
3, Kojimachi 5-chome, Chiyoda-ku, Tokyo, 102 Japan Tel: (265) 2931 Telex: J22908, J22152 CLARISHO
Overseas Sales Branch Offices:
CLARION SHOJI (EUROPA) G.m.b.H. Rudolf-Diesel-Strasse 2, 6236 Eschborn 2, West Germany Tel: 06173-61041-42 Telex: 415414
CLARION CORPORATION OF AMERICA 5500 Rosecrans Blvd.P.O.Box 749, Lawndale, Calif., 90260 U.S.A. Tel: 213-973-1100 Telex: CLARIONLSA 66-4447
CLARION (HONG KONG) CO., LTD, Rooms 333-335, Star House, 3, Salisbury Road, Tsimshatsui, Kowloon, Hong Kong Tel: 3-695393 Telex: SIERA HX74922

■SPECIFICATIONS:

Circuit system: Superheterodyne system 1 RF stage, separately excited frequency conversion, 2 IF stages

Tuning system: Push button μ tuning

Receive frequency: 530KHz to 1605KHz

Intermediate frequency: 452.5KHz

Practical sensitivity: 30dB or less (at 20dB S/N)

Selectivity: 22dB or more (at ±10KHz detune)

Fidelity: 100Hz·····−2±4dB
4000Hz·····(H) −11±6dB
(L) −23±6dB

■ Cassette Section

Playback system: 4 track, 2 program, 2 channel, stereo cassette tape player

Tape: Compact cassette tape of Philips standard (Chrome tape is not applicable)

Tape speed: 4.8cm/sec

Wow and flutter: Less than 0.35% (W.R.M.S)

Playback frequency response: 100Hz to 10KHz

Rated output: 5W×2 (load impedance 8Ω, distortion 5%)

Signal-to-noise ratio: More than 40dB

Adjacent channel cross talk: More than 40dB

MIC input (for both guide, passenger seat MIC): Less than 10mV (Input impedance 10KΩ)

AUX input (L, R): Less than 150mV (input impedance 10KΩ)

VTR input: Less than 1V (input impedance 50KΩ)

Fast forward, rewind time: Less than 70 seconds (C-60 tape)

Power source voltage range: DC 21.6V to 31.2V

Operating temperature: −10°C to 50°C

Printed in Japan 298-2113-00

Current consumption:
Less than 1.5A
Less than 4A (at program switching)
Dimensions: Refer to the drawing
Weight: Approx. 4.5kg

■COMPONENT VIEW:

Main Unit 1
Documents Bag 1

Mounting Bracket HBT-051-100

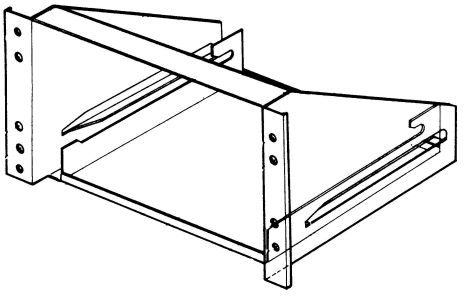

Hex. bolt
710-4020-26×4

Flat washer
740-4000-16×4

Accessories Bag 921-6497-00
(MIC Receptacle)

PMA-013-100× 2

Tap-screw
704-3508-15× 2

Extension lead
852-5087-00× 1

Accessories Bag 921-6240-00
(Noise Elimination)

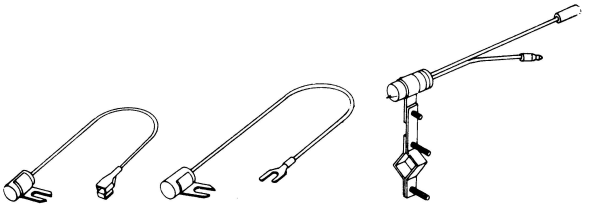

085-0113-00×2 085-0010-02 085-0030-08×1

● Matching Box RBA-003-100
(sold separately)

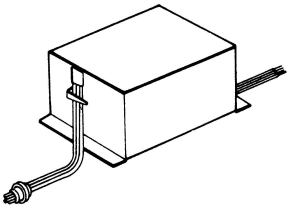

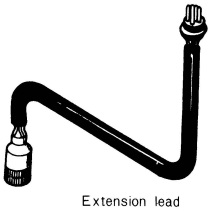

Extension lead
852-5087-00× 1

● Dynamic Microphone DMA-070-100
(sold separately)

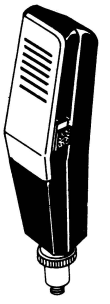

● Electric Condenser Microphone
EMA-003-100
(sold separately)

● Microphone Cord
MCA-024-101 (3m) (sold separately)
MCA-025-101 (5m) (sold separately)
MCA-026-101 (7m) (sold separately)
MCA-027-101 (10m) (sold separately)
∗Curl cord: only 3m

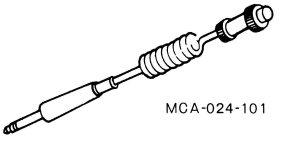

MCA-024-101

● Speaker Kit SKA-056-101
(sold separately)

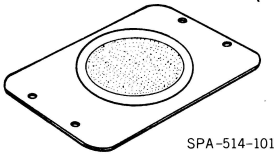

SPA-514-101× 2

● Antenna Jumper 093-0550-01 1
(sold separately)

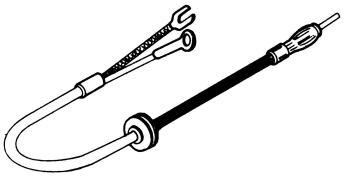

■FEATURES:

〔Radio Section〕

1. One-touch reception by 5-push button system.
2. Separate excitation system used in the local oscillator circuit and ceramic filters in the intermediate amplifier circuit assure stable reception even at very strong input signal and interference.

〔Tape Section〕

1. Auto reverse mechanism for continuous playback enjoyment. When the tape reaches its end, program is automatically switched.
2. Reverse lever and fast forward with lock mechanism permit very easy fast forward and rewind of tape. Moreover, an automatic lock release mechanism is provided so that when the tape comes to end during fast forward or rewind, the lock automatically releases.
3. Tape priority system. Even when listening to the radio, it switches to tape playback by simply inserting cassette tape.

■EXTERNAL DIMENSIONS OF SPEAKER:

MODEL SKA-056-101

Speaker 090-0080-44

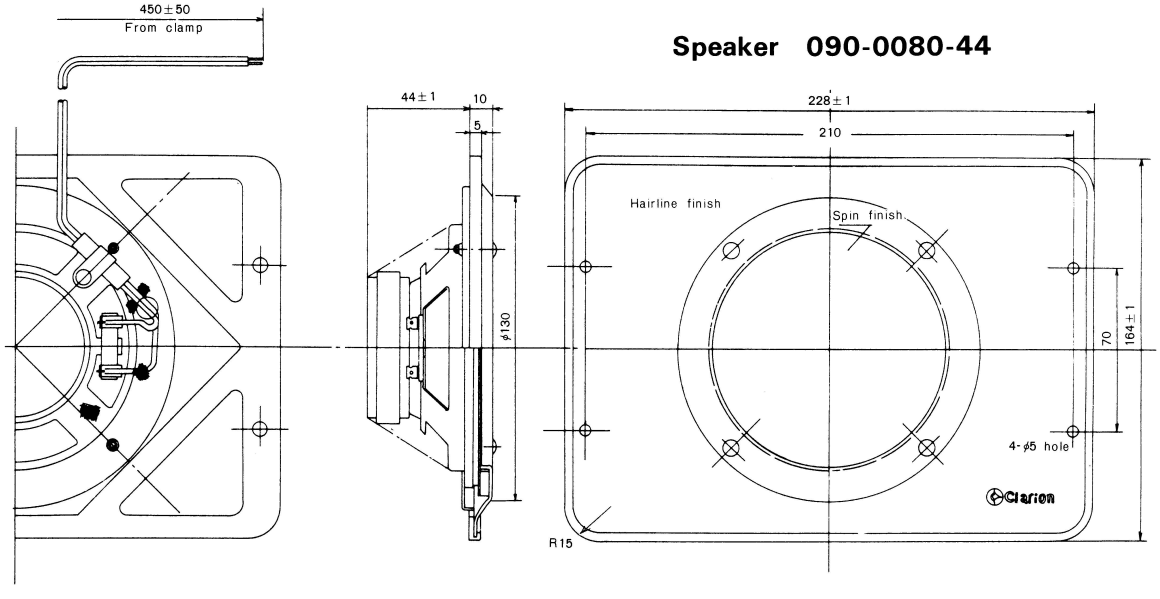

When mounting two or more speakers per channel, the Matching Box RBA-003-100 becomes necessary.

● Dimensions of holes for mounting speaker

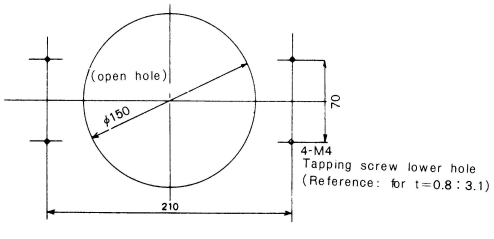

Details of mounting holes

■EXTERNAL APPEARANCE OF MAIN UNIT:

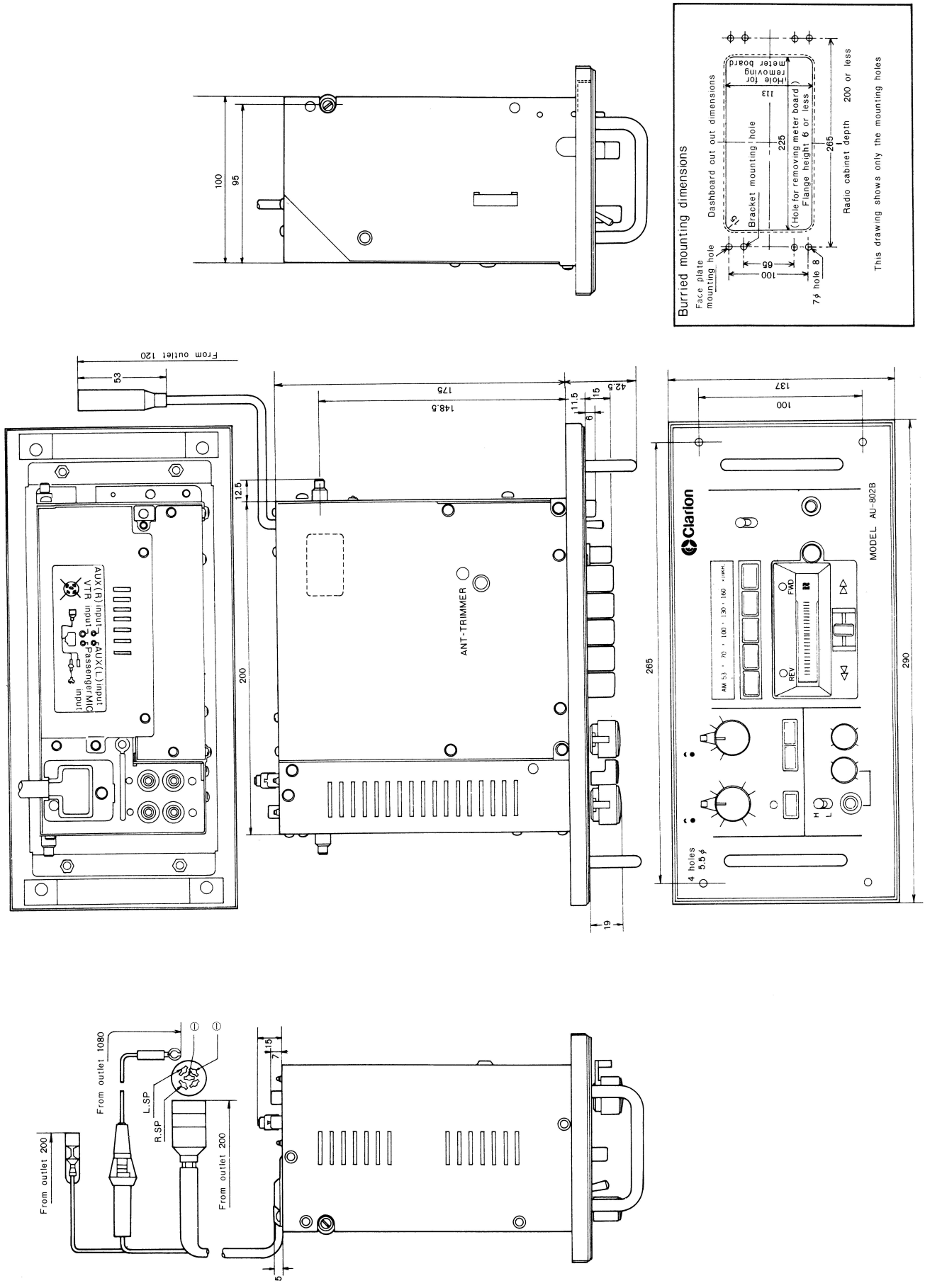

■CONNECTION DIAGRAM:

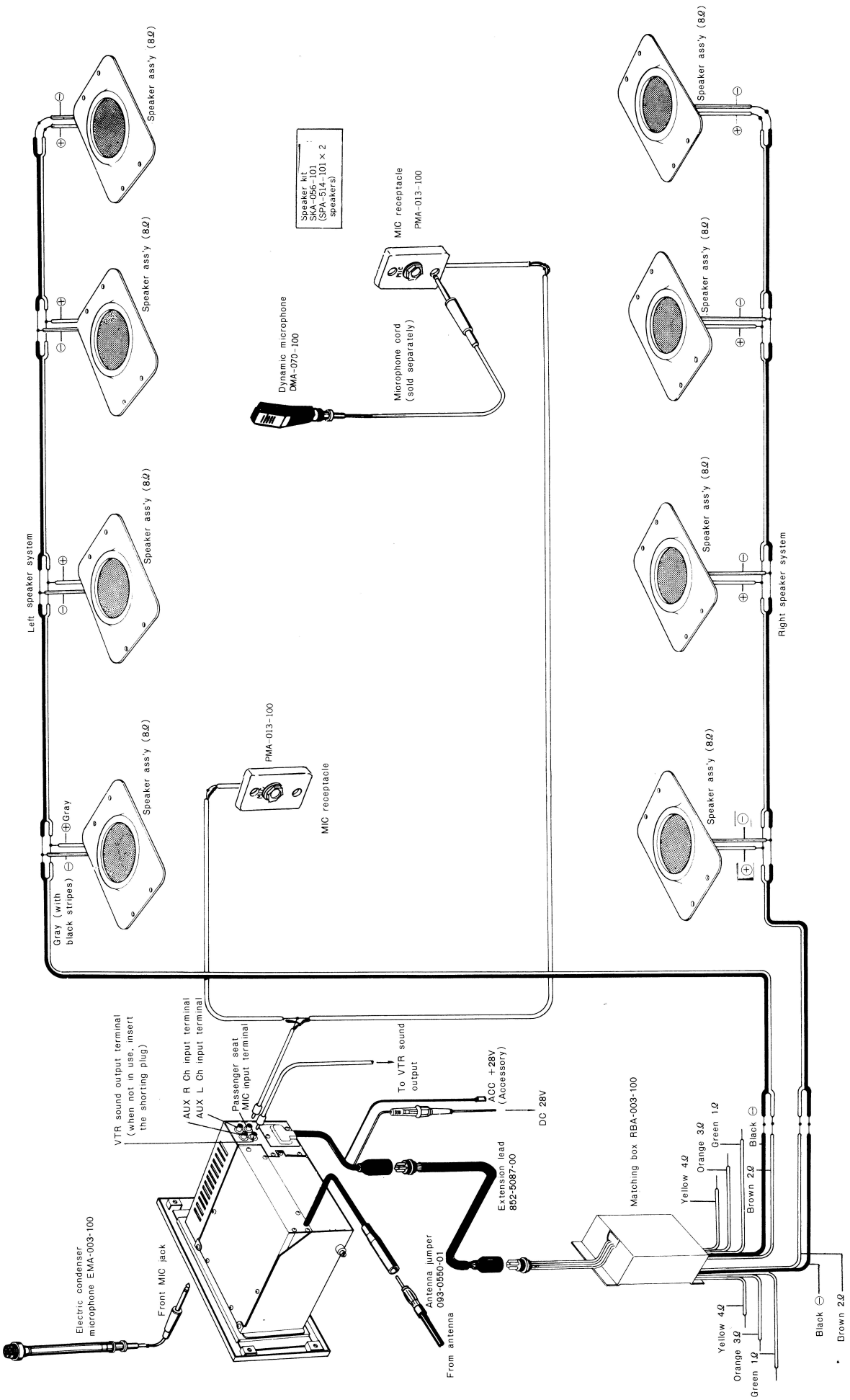

■ADJUSTMENT PROCEDURE:

■AM Circuit

1. Adjusting IFT (See Fig. 1)

   1) Set the sweep generator to 452.5KHz and feed the signal to the hot side of the AM RF coil.
   Connect the vertical input of the oscilloscope to TP5.

   2) Adjust by turning the cores of IFT1 and IFT2 to obtain a waveform as shown in Fig. 1.

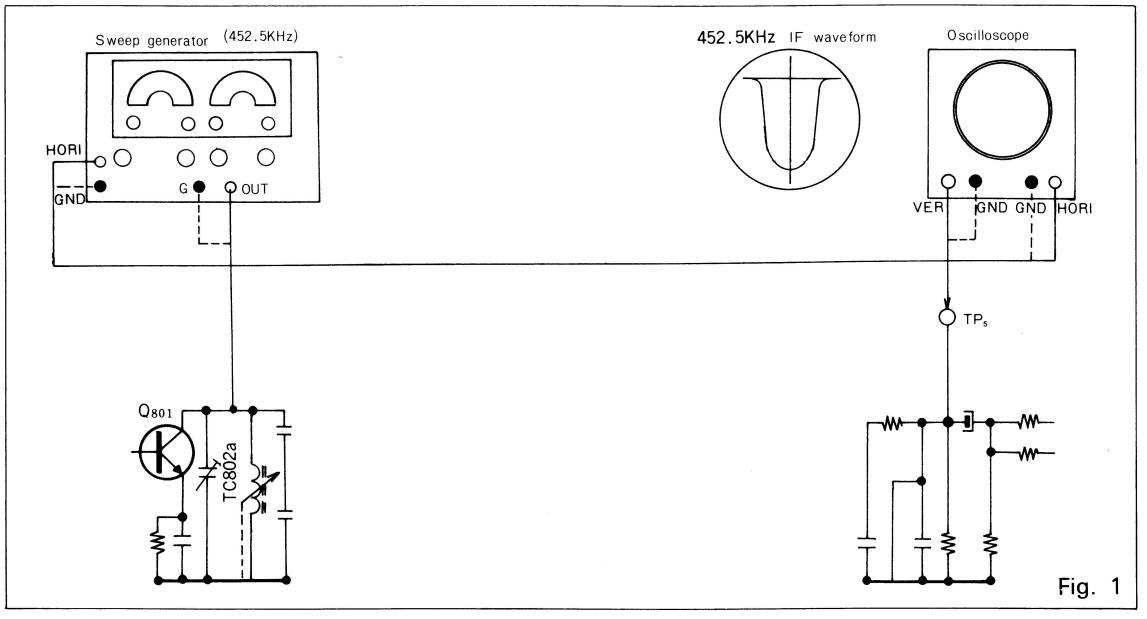

Fig. 1

〔Precautions〕

1) Conditions for adjustment
   - Set the dial pointer of the set to the maximum frequency receiving position.
   - Keep the output of the sweep generator as small as possible.
   - Set the vertical input gain of the oscilloscope to maximum.

2. Adjusting bandwidth, tracking (See Fig.2)

   1) Set the dial pointer of the set to the maximum frequency receiving position and set the S.S.G frequency to 1620KHz.

   2) Adjust the OSC trimmer (TC802.b) to receive the 1620KHz signal.
   3) At the 1620KHz position, adjust the ANT trimmer (TC801) and the RF trimmer (TC802.a) to obtain maximum output.
   4) Set the S.S.G frequency to 600KHz.
   5) Receive the S.S.G signal by turning the tuning knob of the set.
   6) Alternately adjust the bandwidth adjusting coil (L802) and the tuning knob so that the output becomes maximum.
   Repeat the adjustments of items 1)~6) a few times.

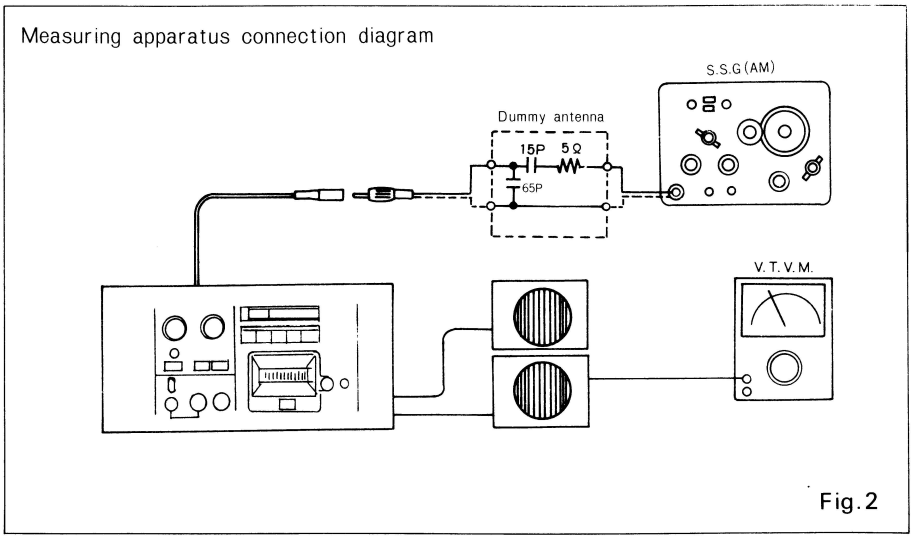

Fig.2

■Regarding adjustment of antenna trimmer

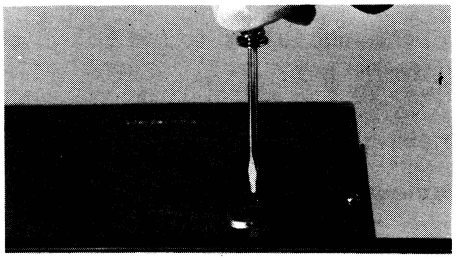

Be sure to perform the adjustment for achieving matching between the set and the antenna.
To perform this adjustment, receive a rather weak station near 1600KHz of the AM band and adjust by turning the antenna trimmer so that the output of this station becomes maximum. However, if there is no suitable station near 1600KHz, adjust so that the noise near this frequency becomes maximum.
The hole for adjusting the antenna trimmer is located on the top cover of the set.

■Adjustment of various parts

1. Adjusting head azimuth

   Misadjustment of the head azimuth is one of the causes giving rise to drop in tonal quality, crosstalk, etc.
   Should the head azimuth be abnormal, adjust according to the following procedure.

   1) Play the test tape 333Hz—10VU, set the VOL. control to maximum, and obtain balance by means of the BALANCE control.
   2) Next play the test tape 6.3KHz—10VU and adjust the head azimuth by turning the head azimuth adjusting screw so that the output becomes almost maximum in both the forward and the reverse directions. (See Fig. 3)

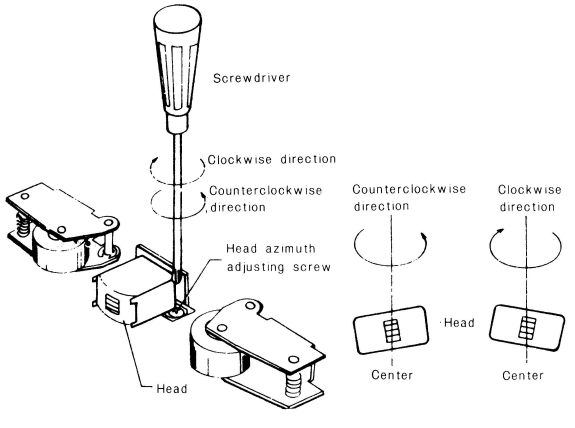

Fig. 3

2. Adjusting head selector switch 013-3291-00

   In case symptoms like absence of sound on one channel, appearance of crosstalk, simultaneous lighting of tape running direction indicating lamps, etc., occur when playing in the reverse direction, if the cause is judged as faulty contacts of the selector switch, loosen the mounting screw of the printed board on whitch the switch is mounted and adjust by shifting the printed board to the left or right.
   After performing the adjustment, fix by means of the screw lock.

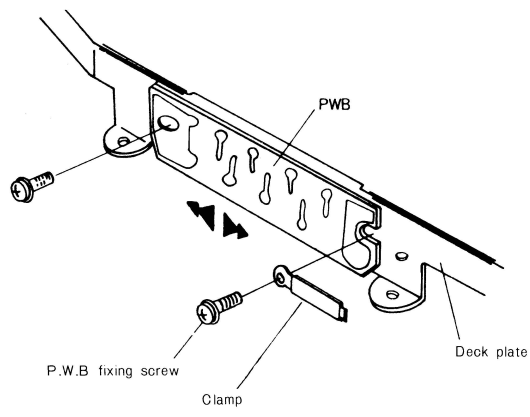

Fig. 4

3. Adjusting plunger

   If faulty switching occurs due to incorrect position of the plunger, loosen the two mounting screws of the plunger and adjust by moving the plunger forward or backward. After the adjustment, verify switching in both forward and reverse directions and lock the screws.

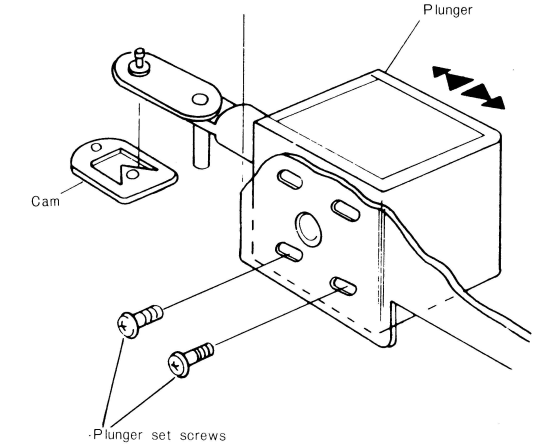

Fig. 5

■Removing and mounting each mechanism

1. Removing eject mechanism (See Fig. 6)

   1) Set the mechanism to PLAY state by pushing the slide plate backward.
   2) Set the FF lever to the FF (or REW) position.
   3) Remove the two machine screws (714-2603-81).
   4) While pushing the slide plate backward, lift the entire eject mechanism and remove it as a complete unit.

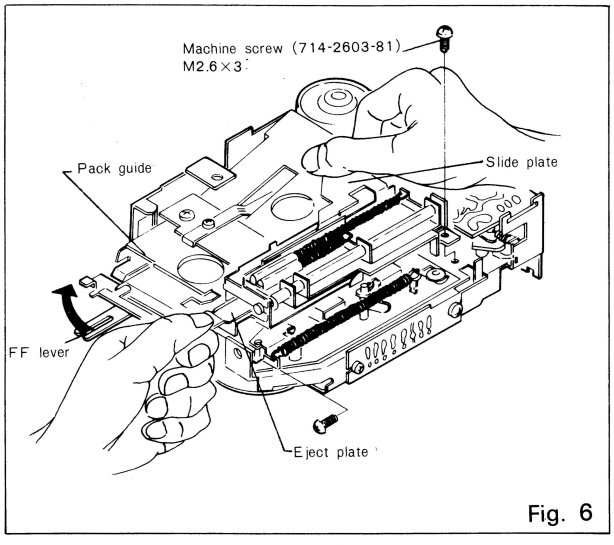

Fig. 6

2. mounting eject mechanism

   1) Set the mechanism to the state shown in 1) and 2) of 1.
   2) With the slide plate pushed backward, remove the eject mechanism as a complete unit.
   3) Remove the two machine screws M2.6×3 (714-2603-81).

3. Removing pack guide

   1) Set the mechanism to the EJECT state.
   2) Remove the two machine screws M2.6×3 (714-2603-81).
   3) Pull out the pack guide in the horizontal direction. (At this time care must be taken not to scratch or damage the pack guide by hitting with the capstan, head, etc.)

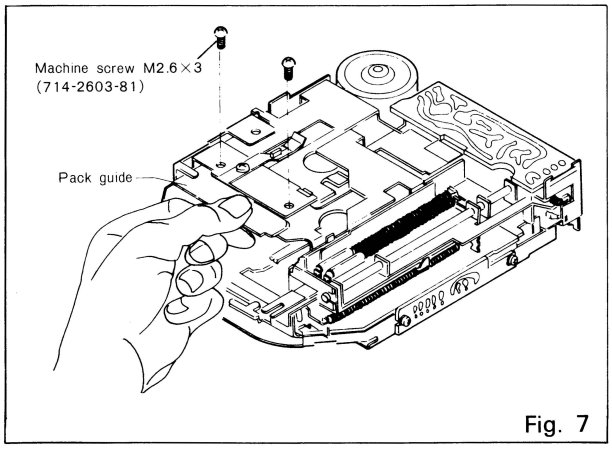

Fig. 7

4. mounting pack guide

   1) Set the mechanism to the EJECT state.
   2) Perform items 3- 3), 2).

5. Removing P.W.B assembly

   1) Remove the motor leads and the plunger leads by means of a soldering iron.
   2) Remove the machine screw M2.6×3 (714-2603-81).
   3) Now if the P.W.B assembly is lifted from the motor side, it can be removed as shown in the figure.

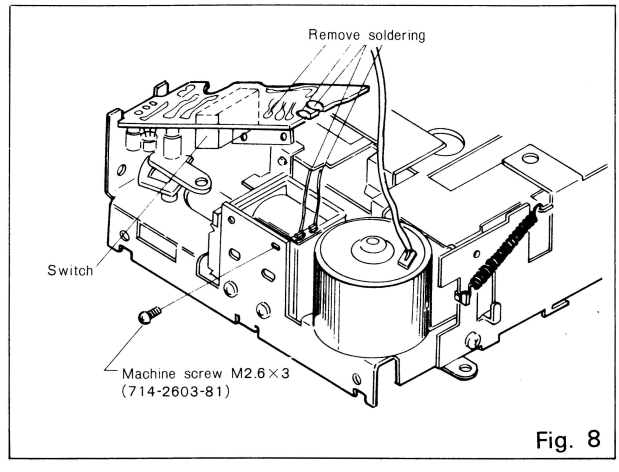

Fig. 8

6. Adjusting pack guide position

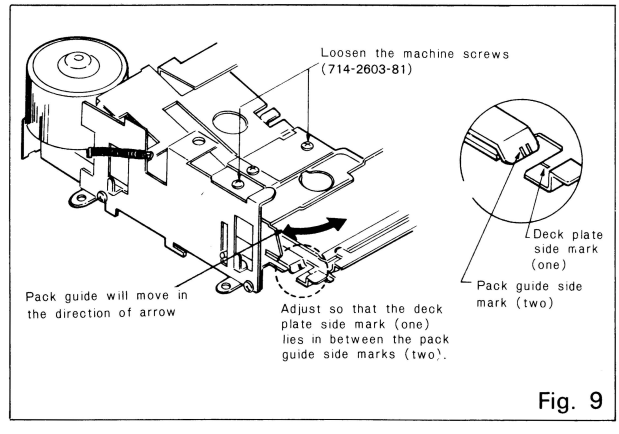

Fig. 9

7. Cleaning head

   Refer to the figure illustrating the details of the method of cleaning the head.

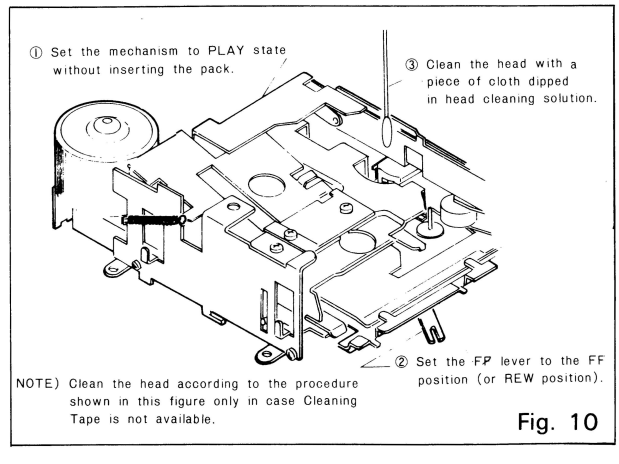

Fig. 10

■EXPLODED VIEW:

◎Operate section

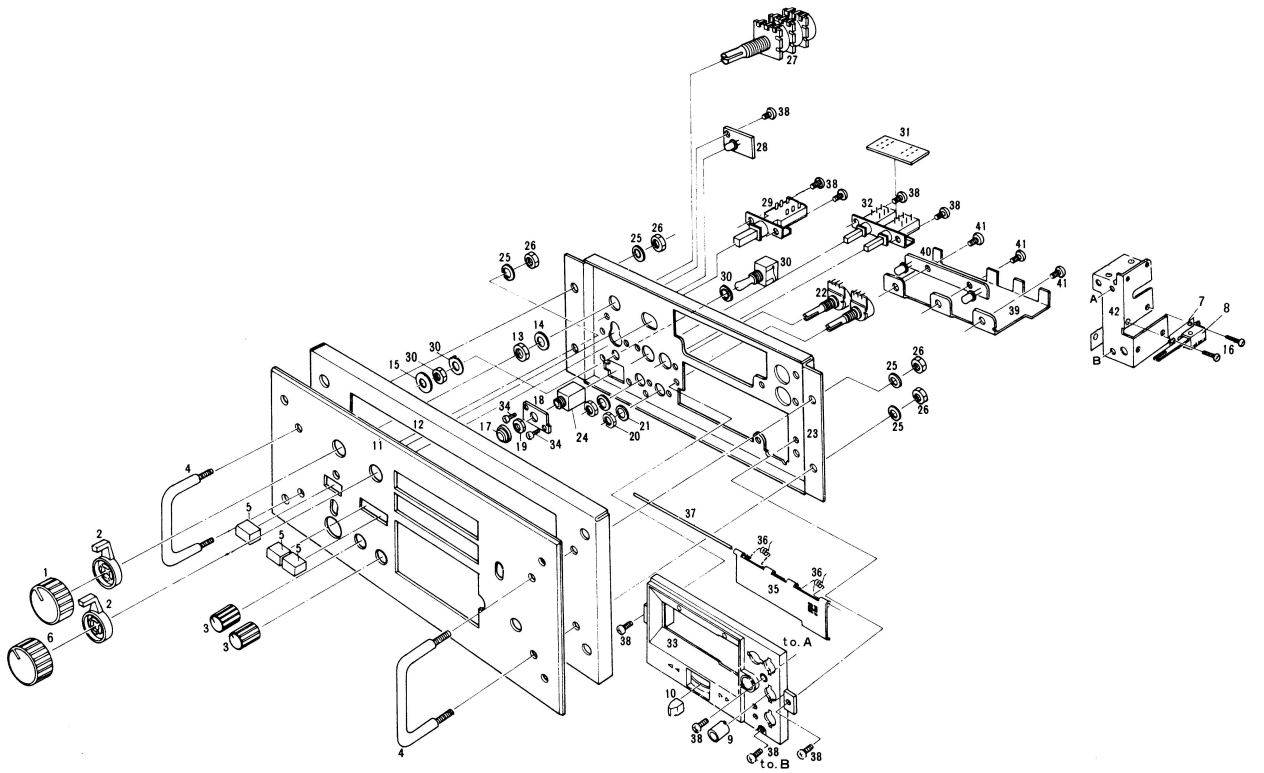

■PARTS LIST:

◎Operate section

REF.NO.	PART NO.	DESCRIPTION	P.C.S
1	380-3545-01	Knob	1
2	380-3284-00	Knob	2
3	380-3544-00	Knob	2
4	341-0962-00	Machined part	2
5	382-0001-06	Button	3
6	380-3545-00	Knob	1
7	348-0084-00	Insulater	1
8	013-3329-00	Switch	1
9	380-3662-00	Knob	1
10	380-3605-00	Knob	1
11	371-2701-00	Trim plate	1
12	308-0862-00	Front cover	1
13	722-0231-00	Hexagon nut	1
14	745-0430-01	Flat washer	1
15	345-2681-00	Nut cover	1
16	714-2003-11	Machine screw (M2x3)	2
17	746-0676-00	Washer	1
18	335-0899-00	Jack hold plate	1
19	722-0273-00	Hexagon nut	1
20	722-0282-00	Hexagon nut	2
21	745-0485-00	Flat washer	2
22	012-3465-00	Variable resistor	2
23	309-0309-00	Front plate	1

REF.NO.	PART NO.	DESCRIPTION	P.C.S
24	075-0107-00	Jack	1
25	741-5000-21	Spring washer	4
26	723-5000-21	Nut	4
27	012-3466-00	Variable resistor	1
28	099-4894-00	P.W.B	1
29	013-3240-00	Switch	1
30	013-3244-00	Switch	1
31	099-4888-00	P.W.B	1
32	013-3328-00	Switch	1
33	370-3085-00	Escutcheon	1
34	714-2608-81	Machine screw (M2.6x8)	2
35	320-0236-00	Rear cover	1
36	750-1828-00	Spring	1
37	341-1109-00	Shaft	1
38	732-3006-11	Sems screw(M3x6)	9
39	330-6214-00	P.W.B plate	1
40	099-4887-00	P.W.B	1
41	704-2606-11	Taping screw (M2.6x6)	3
42	330-6213-00	Switch plate	1

■EXPLODED VIEW:

◎Deck mechanical section

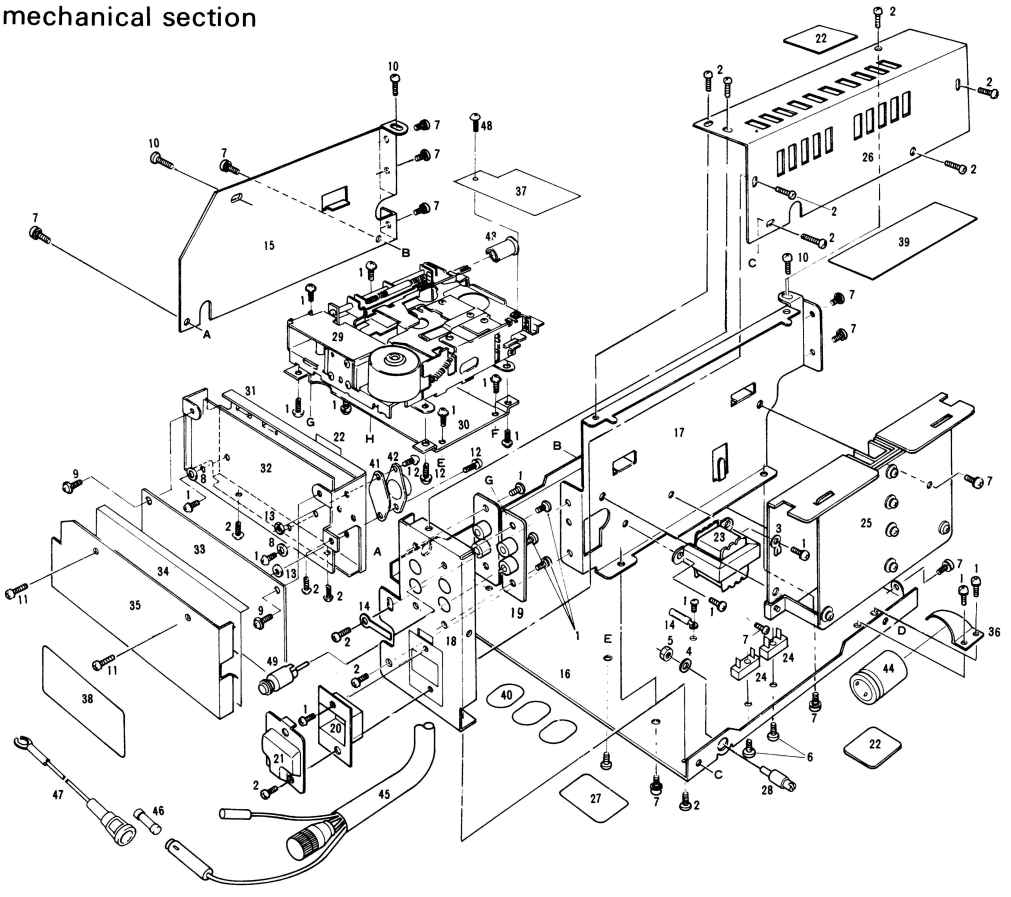

■PARTS LIST:

◎Deck mechanical section

REF.NO.	PART NO.	DESCRIPTION	P.C.S
1	732-3006-11	Sems screw(M3x6)	16
2	714-3006-81	Machine screw (M3x6)	12
3	073-0457-00	Terminal	1
4	741-5000-21	Spring washer(M5)	2
5	723-5000-21	Hexagon nut	2
6	714-3008-11	Machine screw (M3x8)	2
7	732-4008-11	Sems screw(M4x8)	12
8	740-3000-11	Flat washer(M3)	2
9	735-3008-11	D-sems screw (M3x8)	2
10	714-4006-81	Machine screw (M4x6)	3
11	714-3006-81	Machine screw (M3x6)	2
12	735-3008-11	Sems screw(M3x8)	2
13	725-0182-00	Plate nut	2
14	321-0809-00	Clamp	2
15	305-0192-01	Side cover	1
16	312-0173-00	Chassis	1
17	330-6211-00	P.W.B M.T.G bracket	1
18	307-0252-00	Rear cover	1
19	073-0466-00	Terminal	2
20	944-0460-00	Filter assembly	1
21	314-0378-00	Lead holder	1
22	347-0392-00	Paper part	3
23	009-0615-01	Choke	1
24	073-0400-01	Terminal	2
25	099-4495-01	P.W.B	1

REF.NO.	PART NO.	DESCRIPTION	P.C.S
26	303-0259-00	Upper cover	1
27	286-3678-00	Set plate	1
28	341-1104-00	Guide roller	2
29	930-0453-00	Tape mechanism	1
30	330-6293-00	Tape mechanism plate	1
31	330-6215-00	P.W.B M.T.G bracket	1
32	099-4891-00	P.W.B	1
33	099-4890-00	P.W.B	1
34	347-0709-00	Paper part	3
35	307-0270-00	Rear cover	1
36	321-0808-00	Clamp	1
37	347-0715-00	Paper part	1
38	285-0737-00	Guide label	1
39	353-0085-00	Shade	1
40	290-2567-01	Label	3
41	078-0020-00	Insulater sheet	1
42	103-0315-05	Transistor (2SD315E)	1
43	380-3688-00	Knob	1
44	042-0197-01	Electrolytic capacitor (50V1000μF)	1
45	852-4768-01	Extension lead	1
46	120-0050-00	Fuse(5A)	1
47	850-1460-03	A-lead	1
48	714-2703-81	Machine screw (M2.7x3)	1
49	076-0095-02	Plug	1

■EXPLODED VIEW:

◎Amp. section

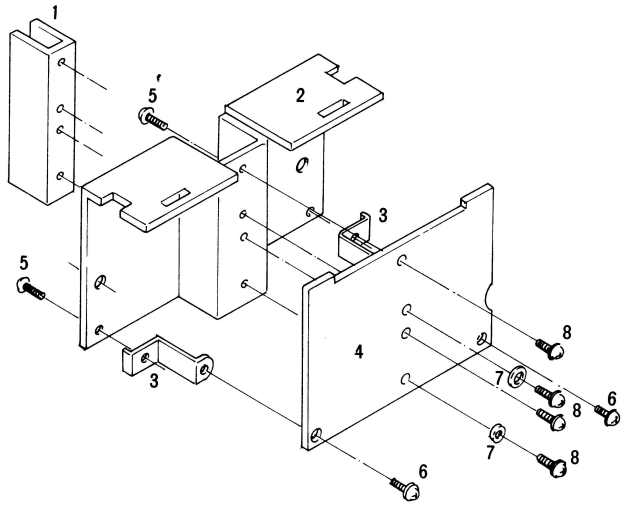

■PARTS LIST:

◎Amp. section

REF.NO.	PART NO.	DESCRIPTION	P.C.S
1	313-0928-00	Heat sink	1
2	313-0927-00	Heat sink	1
3	330-5760-00	P.W.B M.T.G bracket	2
4	099-4495-01	P.W.B	1

REF.NO.	PART NO.	DESCRIPTION	P.C.S
5	732-3006-11	Sems screw(M3x6)	2
6	735-3008-11	D-sems screw (M3x8)	2
7	746-0030-00	Flat washer	2
8	735-3014-11	D-sems screw (M3x14)	4

■EXPLODED VIEW:

◎Tuner section

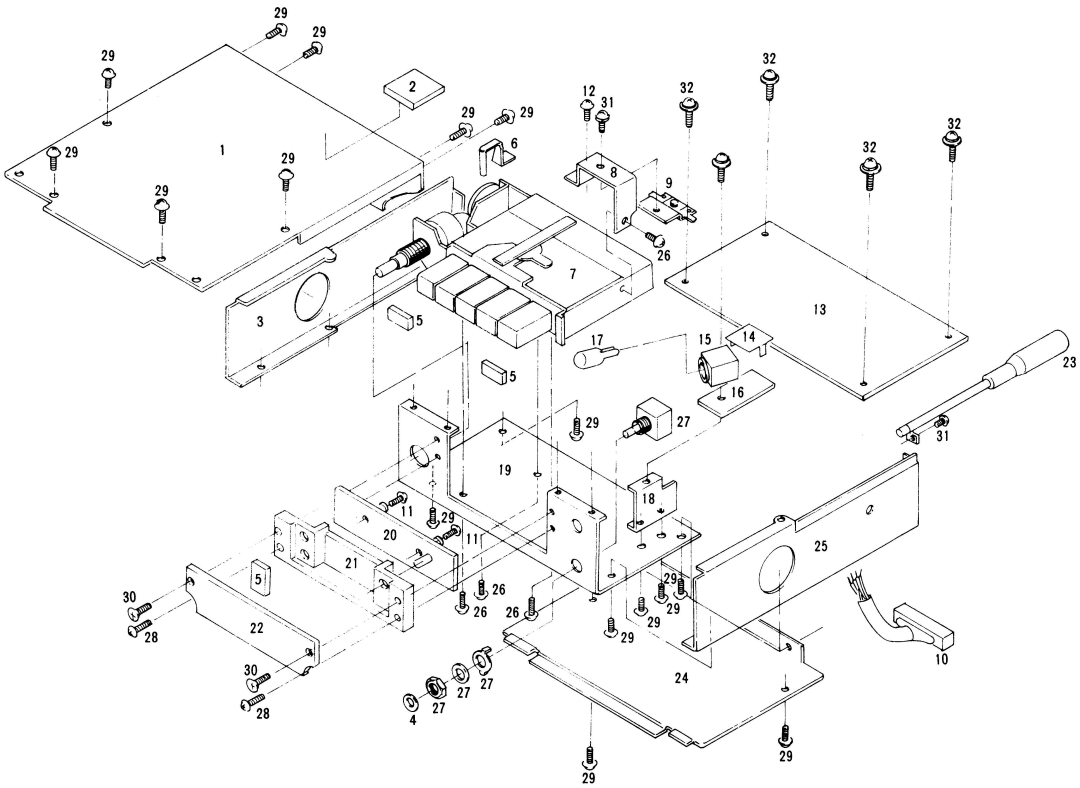

■PARTS LIST:

◎Tuner section

REF.NO.	PART NO.	DESCRIPTION	P.C.S
1	310-0851-00	Upper case	1
2	345-2658-00	Cushion	1
3	305-0193-00	Side cover	1
4	345-2681-00	Nut cover	1
5	345-2680-00	Cushion	3
6	376-0791-01	Dial pointer	1
7	935-1460-19	6-coil push button tuner	1
7-1	012-3464-00	Variable resistor	1
7-2	965-2121-00	Gear ass'y	1
7-3	680-0033-00	Push button	5
8	330-5754-00	Trimmer plate	1
9	004-1474-01	Trimmer	1
10	852-5040-02	Extension lead	1
11	704-2605-00	Tap-screw(M2.6x5)	2
12	714-2605-11	Machine screw (M2.6x5)	1
13	099-4503-01	P.W.B	1
14	004-1441-00	Trimmer	1
15	070-0927-01	PL-socket	1

REF.NO.	PART NO.	DESCRIPTION	P.C.S
16	099-4504-00	P.W.B	1
17	017-0322-00	Pilotlamp	1
18	330-5755-00	P.W.B M.T.G bracket	1
19	311-0882-00	Lower case	1
20	099-4502-00	P.W.B	1
21	374-0684-00	Back plate	1
22	372-2846-00	Dial plate	1
23	092-0514-00	Antenna receptacle	1
24	304-0278-01	Lower cover	1
25	305-0194-00	Side cover	1
26	731-3006-80	Taptight(M3x6)	4
27	013-3244-00	Switch	1
28	714-2608-11	Machine screw (M2.6x8)	2
29	714-3006-81	Machine screw (M3x6)	16
30	714-3012-41	Machine screw (M3x12)	2
31	732-3006-11	Sems screw(M3x6)	2
32	735-3008-11	D-sems screw (M3x8)	5

◎Tuner section

REF.NO.	PART NO.	DESCRIPTION	P.C.S
D_{804}	001-0126-00	Diode(LN21)	1
D_{801}	001-0020-00	Diode(1N60)	1
D_{803}	001-0099-01	Diode(HZ7B)	1
D_{802}	001-0112-00	Diode(1S1588)	1
TC_{802}	004-1441-00	Trimmer	1
IFT_{802}	005-0680-00	IF-trans	1
IFT_{801}	005-0715-00	IF-trans	1
L_{801}	010-0490-01	Coil	1
L_{803}	010-1730-00	Coil	1
L_{802}	010-1781-00	Coil	1
$Q_{803,804}$	102-0454-02	Transistor (2SC454B)	2
$Q_{805,806}$	102-0458-02	Transistor (2SC458B)	2
$Q_{801,802,807}$	102-0460-02	Transistor (2SC460B)	3
R_{817}	111-1011-32	Film resistor (¼W100Ω)	1
$R_{818,823,833}^{805,809,811}$	111-1021-32	Film resistor (¼W1KΩ)	6
$R_{814,819}$	111-1031-32	Film resistor (¼W10KΩ)	2
$R_{810,815,828}$	111-1531-32	Film resistor (¼W15KΩ)	3
R_{827}	111-1541-32	Film resistor (¼W150KΩ)	1
$R_{822,832}$	111-1831-32	Film resistor (¼W18KΩ)	2
R_{809}	111-1841-32	Film resistor (¼W180KΩ)	1
$R_{808,835}$	111-2221-32	Film resistor (¼W2.2KΩ)	2
R_{837}	111-2231-32	Film resistor (¼W22KΩ)	1
R_{803}	111-3301-32	Film resistor (¼W33Ω)	1
R_{812}	111-3311-32	Film resistor (¼W330Ω)	1

REF.NO.	PART NO.	DESCRIPTION	P.C.S
$R_{802,838}$	111-3321-32	Film resistor (¼W3.3KΩ)	2
R_{807}	111-3331-32	Film resistor (¼W33KΩ)	1
$R_{826,831,836}^{801,804,813}$	111-4721-32	Film resistor (¼W4.7KΩ)	6
$R_{820,821}$	111-4731-32	Film resistor (¼W47KΩ)	2
R_{806}	111-5621-32	Film resistor (¼W5.6KΩ)	1
$R_{824,834}$	111-5631-32	Film resistor (¼W56KΩ)	2
R_{816}	111-6811-32	Film resistor (¼W680Ω)	1
$R_{825,830}$	111-6831-32	Film resistor (¼W68KΩ)	2
R_{839}	111-8221-32	Film resistor (¼W8.2KΩ)	1
R_{829}	114-1222-51	Film resistor (1W1.2KΩ)	1
R_{840}	114-1022-51	Film resistor (1W1KΩ)	1
$C_{802,809,816}$	141-1032-12	Polyester capacitor (0.01μF)	3
$C_{826,828}$	141-1522-12	Polyester capacitor (0.0015μF)	2
$C_{805,807}$	141-2222-12	Polyester capacitor (0.0022μF)	2
C_{817}	141-1032-32	Polyester capacitor (0.01μF)	1
C_{803}	141-3322-12	Polyester capacitor (0.0033μF)	1
$C_{814,815,825,827,829}^{804,808,811,812}$	141-3932-14	Polyester capacitor (0.039μF)	9
C_{801}	144-1512-17	Mica capacitor (150PF)	1
C_{806}	144-1112-14	Mica capacitor (110PF)	1
C_{830}	155-2012-50	Ceramic capacitor (200PFTH)	1
$C_{810,813,818}$	180-1064-22	Electrolytic capacitor (VL10V10μF)	3
C_{820}	180-1074-22	Electrolytic capacitor (VL10V100μF)	1
$C_{819,822,823,824}$	180-2254-62	Electrolytic capacitor (VL50V2.2μF)	4
C_{821}	180-4774-22	Electrolytic capacitor (VL10V470μF)	1

◎Pre Amp. P.W.B

REF.NO.	PART NO.	DESCRIPTION	P.C.S
D_{601}	001-0099-01	Diode(HZ7B)	1
$IC_{101,201}$	051-0113-00	IC(AN262)	2
R_{602}	110-2722-41	Solid resistor (½W2.7KΩ)	1
$R_{107,207}$	111-1021-22	Film resistor (⅛W1KΩ)	2
$R_{101,201}$	111-2211-22	Film resistor (⅛W220Ω)	2
$R_{106,206}$	111-2221-22	Film resistor (⅛W2.2KΩ)	2
$R_{103,203}$	111-3321-22	Film resistor (⅛W3.3KΩ)	2
$R_{104,105,204,205}$	111-4721-22	Film resistor (⅛W4.7KΩ)	4
$R_{108,109,208,209}$	111-5621-22	Film resistor (⅛W5.6KΩ)	4
$R_{102,202}$	111-6831-22	Film resistor (⅛W68KΩ)	2
R_{601}	114-1021-52	Film resistor (1W1KΩ)	1
$C_{101,201}$	141-1522-12	Polyester capacitor (0.0015μF)	2

REF.NO.	PART NO.	DESCRIPTION	P.C.S
$C_{111,211}$	141-3322-12	Polyester capacitor (0.0033μF)	2
$C_{103,203}$	141-3932-14	Polyester capacitor (0.039μF)	2
$C_{110,210}$	141-5622-12	Polyester capacitor (0.0056μF)	2
$C_{109,209}$	180-2254-62	Electrolytic capacitor (VL50V2.2μF)	2
$C_{106,206}$	180-2264-22	Electrolytic capacitor (VL10V22μF)	2
C_{112}	180-2274-32	Electrolytic capacitor (VL16V220μF)	1
$C_{104,204}$	180-3354-52	Electrolytic capacitor (VL35V3.3μF)	2
C_{212}	180-3374-22	Electrolytic capacitor (VL10V330μF)	1
$C_{108,208}$	181-1053-62	Electrolytic capacitor (VL50V1μFLN)	2
$C_{102,107,202,207}$	181-1063-32	Electrolytic capacitor (VL16V10μFLN)	4
$C_{105,205}$	181-2264-22	Electrolytic capacitor (VL10V22μFLN)	2

◎Main Amp. P.W.B

REF.NO.	PART NO.	DESCRIPTION	P.C.S
$IC_{301,401}$	051-0051-00	IC(AN272)	2
IC_{501}	051-0011-03	IC(TA-7063P)	1
D_{501}	001-0103-00	Diode(HZ-12B)	1
$R_{308,408}$	111-1211-32	Film resistor (¼W120Ω)	2
$R_{506,509}$	111-2221-32	Film resistor (¼W2.2KΩ)	2
$R_{301,303,401,403}$	111-4721-32	Film resistor (¼W4.7KΩ)	4
$R_{304,404,503,508}$	111-1031-32	Film resistor (¼W10KΩ)	4
$R_{309,409}$	111-2231-32	Film resistor (¼W22KΩ)	4
$R_{310,406,407,410}$	111-3331-32	Film resistor (¼W33KΩ)	4
R_{504}	111-3931-32	Film resistor (¼W39KΩ)	1
R_{505}	111-1541-32	Film resistor (¼W150KΩ)	1
R_{507}	111-6831-32	Film resistor (¼W68KΩ)	1
$R_{305,405}$	111-8231-32	Film resistor (¼W82KΩ)	2
$C_{306,406}$	144-1502-11	Mica capacitor (50V15PF)	2
$C_{307,407}$	144-4702-12	Mica capacitor (50V47PF)	2
C_{504}	144-1012-14	Mica capacitor (50V100PF)	1

REF.NO.	PART NO.	DESCRIPTION	P.C.S
$C_{305,405}$	144-1512-17	Mica capacitor (50V150PF)	2
$C_{310,410}$	043-0086-00	Ceramic capacitor (50V0.1μF)	2
$C_{302,402}$	141-2722-11	Polyester capacitor (50V0.0027μF)	2
C_{508}	141-1042-15	Polyester capacitor (50V0.01μF)	1
C_{506}	141-1022-11	Polyester capacitor (50V0.001μF)	1
C_{502}	042-0230-00	Electrolytic capacitor (35V0.47μF)	1
$C_{501,507,509}$	180-1064-22	Electrolytic capacitor (VL10V10μF)	3
$C_{311,312,411,412}$	180-3364-32	Electrolytic capacitor (VL16V33μF)	4
C_{505}	180-1074-32	Electrolytic capacitor (VL16V100μF)	1
C_{612}	180-1074-52	Electrolytic capacitor (VL35V100μF)	1
$C_{309,409}$	180-3374-42	Electrolytic capacitor (VL25V330μF)	2
$C_{303,403}$	180-1054-62	Electrolytic capacitor (VL50V1μFNP)	2
$C_{308,408}$	180-4764-31	Electrolytic capacitor (HL16V47μF)	2
$C_{304,404}$	180-4764-51	Electrolytic capacitor (HL35V47μF)	2
$R_{311,411}$	114-4782-52	Film resistor (1W0.47Ω)	2

◎Tape indicator P.W.B

REF.NO.	PART NO.	DESCRIPTION	P.C.S
$D_{602,603}$	001-0181-00	Diode(LN-31)	2
R_{603}	114-1021-51	Film resistor (1W1KΩ)	1

◎Power indicator P.W.B

REF.NO.	PART NO.	DESCRIPTION	P.C.S
D_{607}	001-0126-00	Diode(LN-21)	1
R_{608}	114-1021-51	Film resistor (1W1KΩ)	1

◎Power supply P.W.B

REF.NO.	PART NO.	DESCRIPTION	P.C.S
D_{604}	001-0161-12	Diode(MA1150)	1
Q_{601}	103-0315-05	Transistor (2SD315E)	1
R_{606}	110-1522-42	Solid resistor (½W1.5KΩ)	1
R_{605}	114-1802-51	Film resistor (1W18Ω)	1

REF.NO.	PART NO.	DESCRIPTION	P.C.S
C_{602}	180-1064-41	Electrolytic capacitor (HL25V10μF)	1
C_{603}	180-1074-51	Electrolytic capacitor (HL35V100μF)	1
	180-4754-51	Electrolytic capacitor (HL35V4.7μF)	1

◎Other

REF.NO.	PART NO.	DESCRIPTION	P.C.S
D_{502}	001-0077-00	Diode(10D4)	1
CH_{601}	009-0615-01	Choke	1
C_{604}	042-0197-01	Electrolytic capacitor (50V1000μF)	1
$C_{605,606}$	043-0022-00	Electrolytic capacitor (250V0.04μF)	2
R_{501}	111-1031-31	Film resistor (¼W10KΩ)	1

REF.NO.	PART NO.	DESCRIPTION	P.C.S
$R_{610,611}$	111-4731-31	Film resistor (¼W47KΩ)	2
R_{609}	114-5601-51	Film resistor (1W56Ω)	1
C_{503}	141-2232-13	Polyester capacitor (0.022μF)	1
$C_{301,401}$	141-6832-01	Polyester capacitor (0.068μF)	2

■EXPLODED VIEW:

◎Tape mechanism section

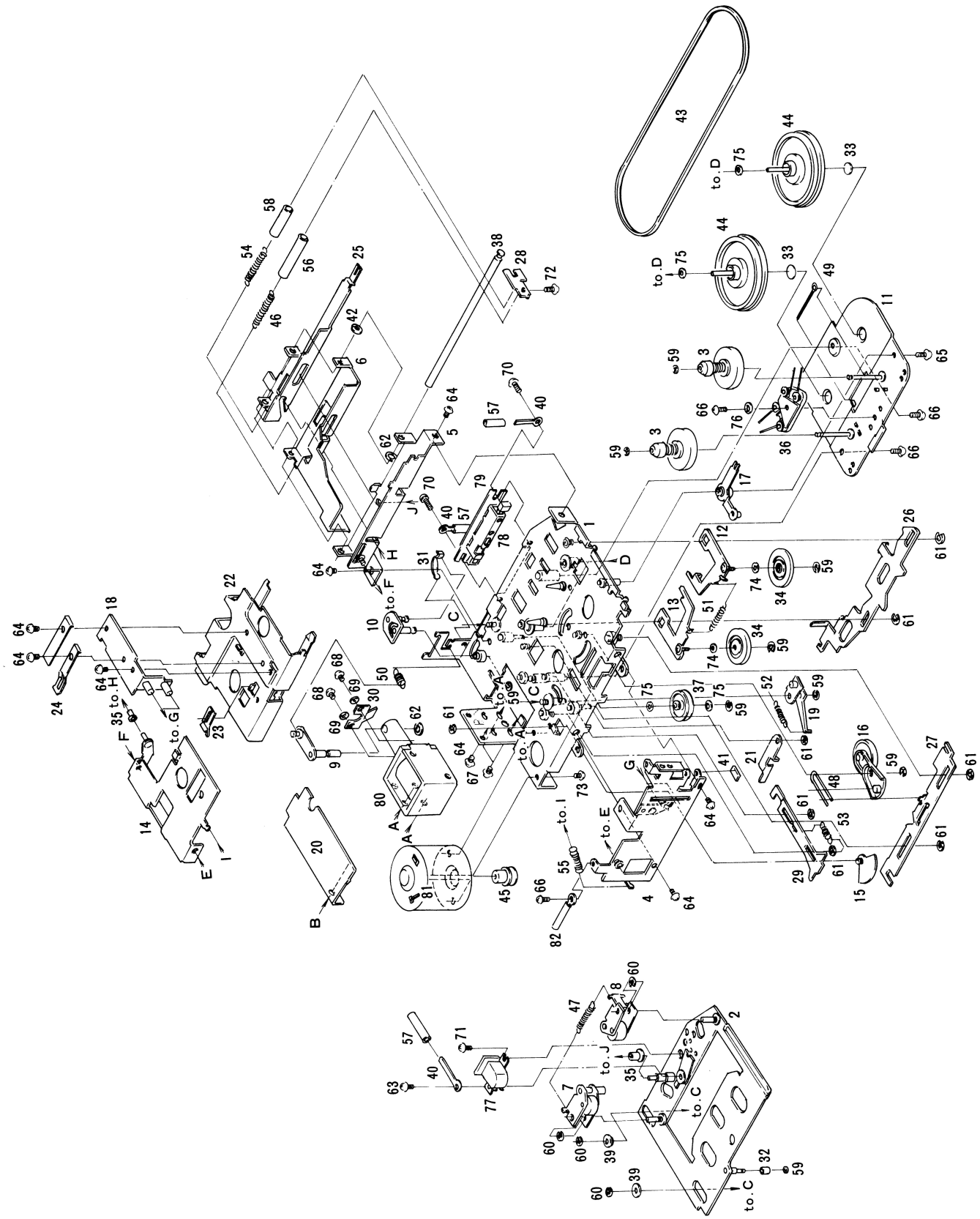

■PARTS LIST: ◎Tape mechanism section

REF.NO.	PART NO.	DESCRIPTION	P.C.S
1	960-3027-03	Deck plate ass'y	1
2	960-3032-05	Head plate ass'y	1
3	960-3087-00	Reel base ass'y	2
4	960-3088-01	Side panel ass'y	1
5	960-3030-02	Fram ass'y	1
6	960-3031-01	Slide plate ass'y	1
7	960-3089-00	Roller A ass'y	1
8	960-3090-00	Roller B ass'y	1
9	960-3037-00	Cam plate ass'y	1
10	960-3038-00	Cam ass'y	1
11	960-3039-02	Bottom plate ass'y	1
12	960-3040-01	Idler plate A ass'y	1
13	960-3041-01	Idler plate B ass'y	1
14	960-3043-02	Guide arm ass'y	1
15	960-3045-00	Off plate C ass'y	1
16	960-3091-00	F.F idler ass'y	1
17	960-3093-00	F.F lever ass'y	1
18	960-3029-00	Guide plate ass'y	1
19	960-3044-00	Arm ass'y	1
20	099-4642-05	P.W.B	1
21	630-1021-00	Off plate B	1
22	606-0062-02	Pack guide	1
23	630-1000-00	Plate spring A	1
24	630-1001-01	Plate spring B	1
25	630-1069-01	Eject lever	1
26	630-1070-00	Change plate	1
27	630-1018-02	F.F plate	1
28	630-1019-00	Hook plate	1
29	630-1020-00	Off plate A	1
30	630-1057-00	Plate spring	1
31	630-0931-00	Plate spring	1
32	631-0231-00	F.F roller	1
33	631-0222-00	Thrust plate	2
34	631-0262-00	Idler	2
35	631-0234-01	Guide roller	2
36	631-0236-00	Detector	1
37	632-0561-00	Tension roller	1
38	632-0716-00	Eject shaft	1
39	610-0067-00	Roller	2
40	330-4896-00	Clamp	2
41	340-0398-00	Spacer	1

REF.NO.	PART NO.	DESCRIPTION	P.C.S
42	345-2651-00	Cushion	1
43	602-0044-00	Belt	1
44	611-0050-00	Flywheel	2
45	603-0053-00	Motor pulley	1
46	750-1793-00	Spring	1
47	750-1795-00	Spring	1
48	750-1810-00	Spring	1
49	750-1811-01	Spring	1
50	750-1819-00	Spring	1
51	750-1844-00	Spring	1
52	750-1797-00	Spring	1
53	750-1799-01	Spring	1
54	750-1794-00	Spring	1
55	750-1798-00	Spring	1
56	820-3030-04	Vinyl tube	1
57	820-4020-02	Vinyl tube	2
58	820-4020-04	Vinyl tube	1
59	743-1500-10	E-ring	9
60	743-2000-10	E-ring	4
61	743-2500-10	E-ring	8
62	743-3000-10	E-ring	2
63	714-2004-81	Machine screw	1
64	714-2603-81	Machine screw	10
65	714-2605-41	Machine screw	1
66	714-2605-81	Machine screw	4
67	714-3004-81	Machine screw	2
68	714-2603-11	Machine screw	2
69	741-2600-21	Spring washer	2
70	732-2605-11	Sems screw	2
71	716-0286-00	Machine screw (M2×0.25×4)	1
72	716-0302-00	Machine screw	1
73	732-2604-11	Sems screw	2
74	746-0617-00	Flat washer	2
75	746-0624-00	Flat washer	4
76	746-0670-00	Flat washer	1
77	011-0241-01	Head	1
78	013-3291-00	Switch	1
79	099-4878-01	P.W.B	1
80	015-0218-00	Plunger	1
81	020-0333-01	DC motor	1
82	321-0809-00	Clamp	1

◎Auto reverse P.W.B

REF.NO.	PART NO.	DESCRIPTION	P.C.S
$D_{1,2}$	001-0112-00	Diode(1S1588)	2
D_3	001-0153-00	Diode(1N4004)	1
	013-2690-05	Switch	1
	078-0022-00	Insulater sheet (Use 2SD235LBY)	1
$Q_{2,3}$	100-0561-25	Transistor (2SA561Y)	2
Q_1	102-0734-15	Transistor (2SC734-O)	1
Q_4	103-0235-85	Transistor (2SD235LBY)	1
R_8	111-1021-22	Film resistor (1/8W1KΩ)	1
R_7	111-1821-42	Film resistor (1/2W1.8KΩ)	1

REF.NO.	PART NO.	DESCRIPTION	P.C.S
R_4	111-2731-21	Film resistor (1/8W27KΩ)	1
R_5	111-3321-21	Film resistor (1/8W3.3KΩ)	1
$R_{1,3}$	111-3331-21	Film resistor (1/8W33KΩ)	2
R_2	111-5631-21	Film resistor (1/8W56KΩ)	1
R_6	114-1811-51	Film resistor (1W180Ω)	1
C_3	165-3934-02	Ceramic capacitor (0.039μFYG)	1
C_1	181-2253-62	Electrolytic capacitor (VL50V2.2μF)	1
C_2	181-2263-52	Electrolytic capacitor (VL35V22μF)	1

■SCHEMATIC DIAGRAM:

◎Tuner section

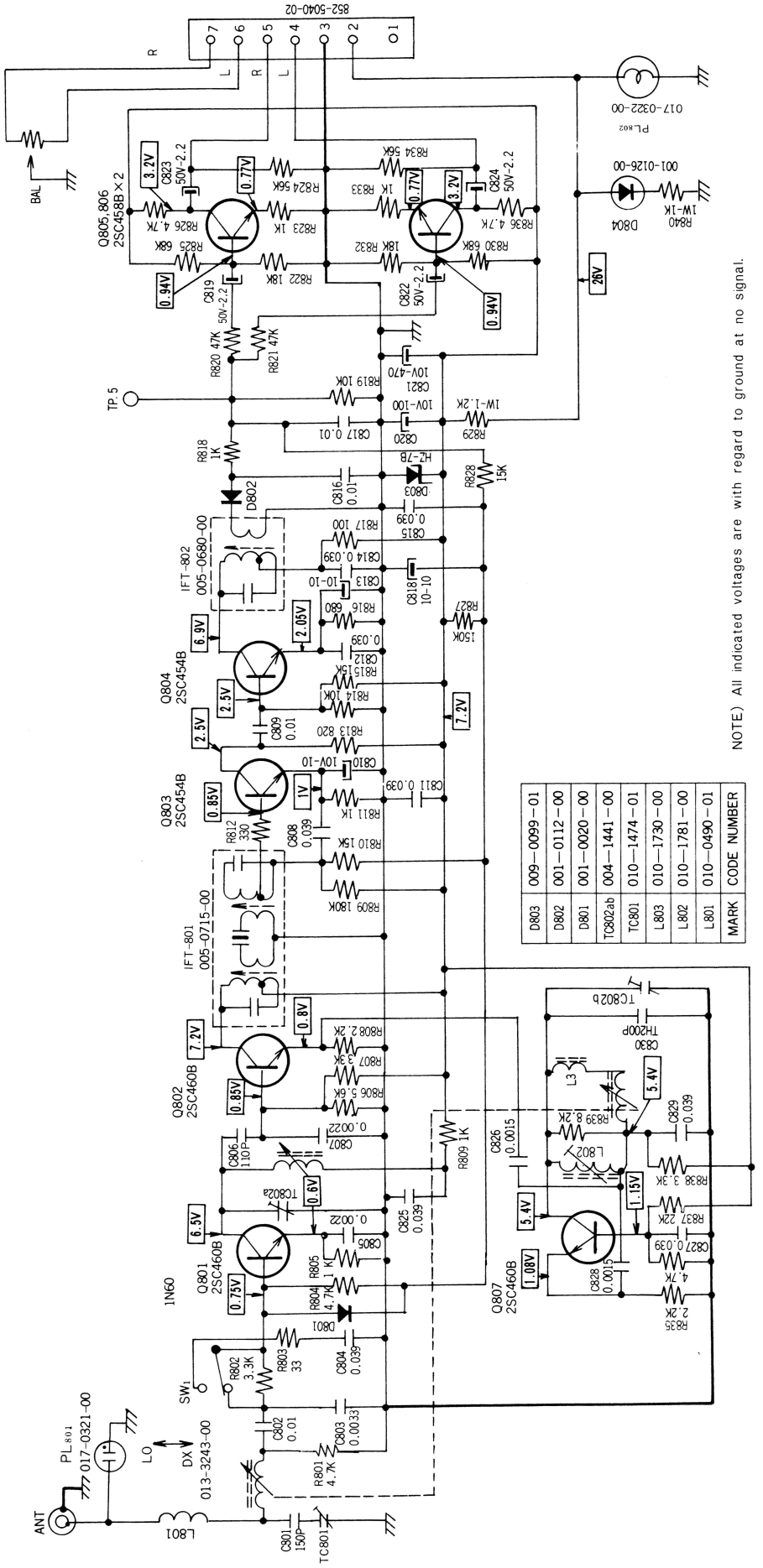

NOTE) All indicated voltages are with regard to ground at no signal.

MARK	CODE NUMBER
D803	009—0099—01
D802	001—0112—00
D801	001—0020—00
TC802ab	004—1441—00
TC801	010—1474—01
L803	010—1730—00
L802	010—1781—00
L801	010—0490—01

■PRINTED WIRING BOARD:

◎Tuner section

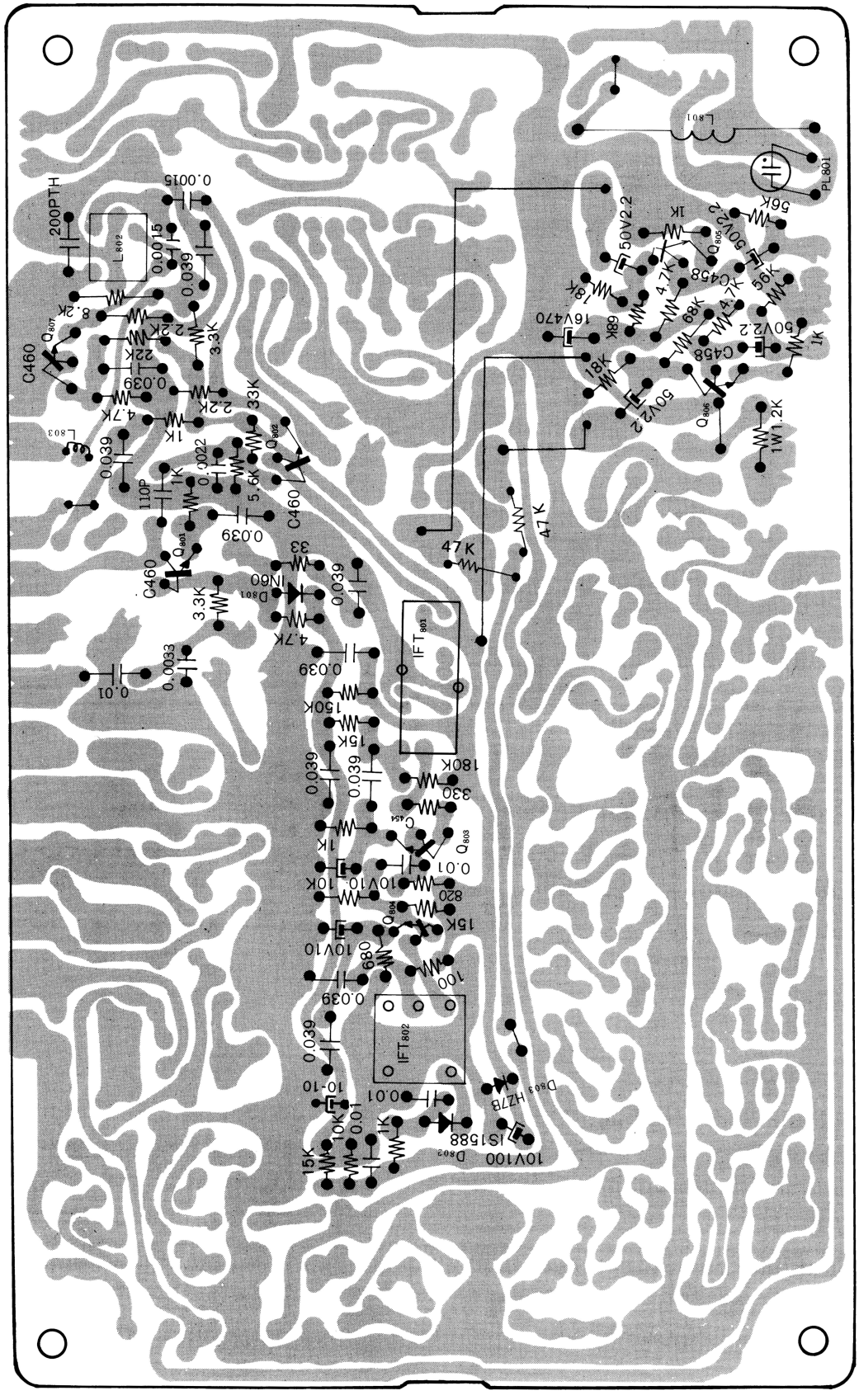

■SUBSTANC WIRING BOARD:

◎Tuner section

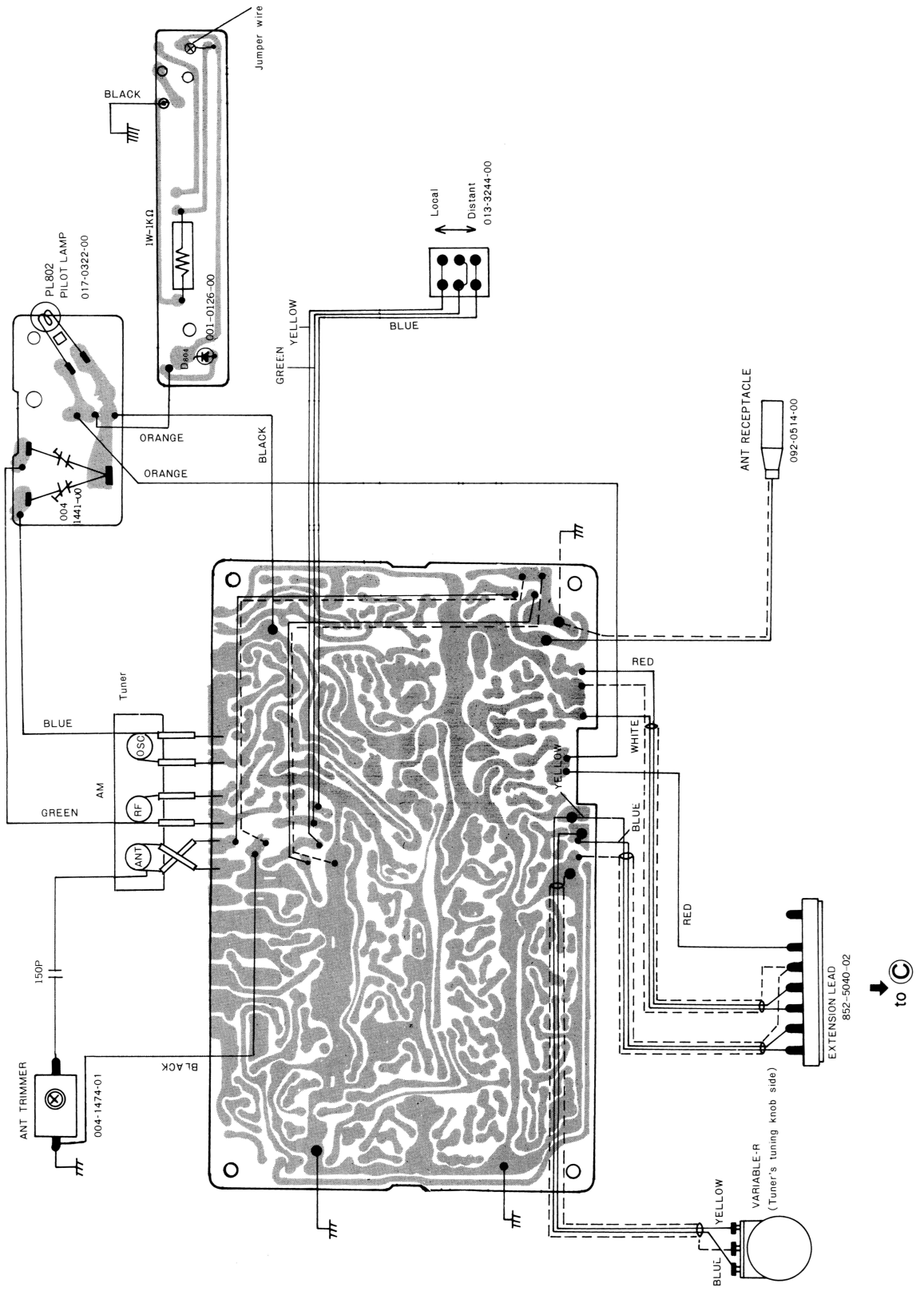

■SCHEMATIC DIAGRAM:

◎Main section

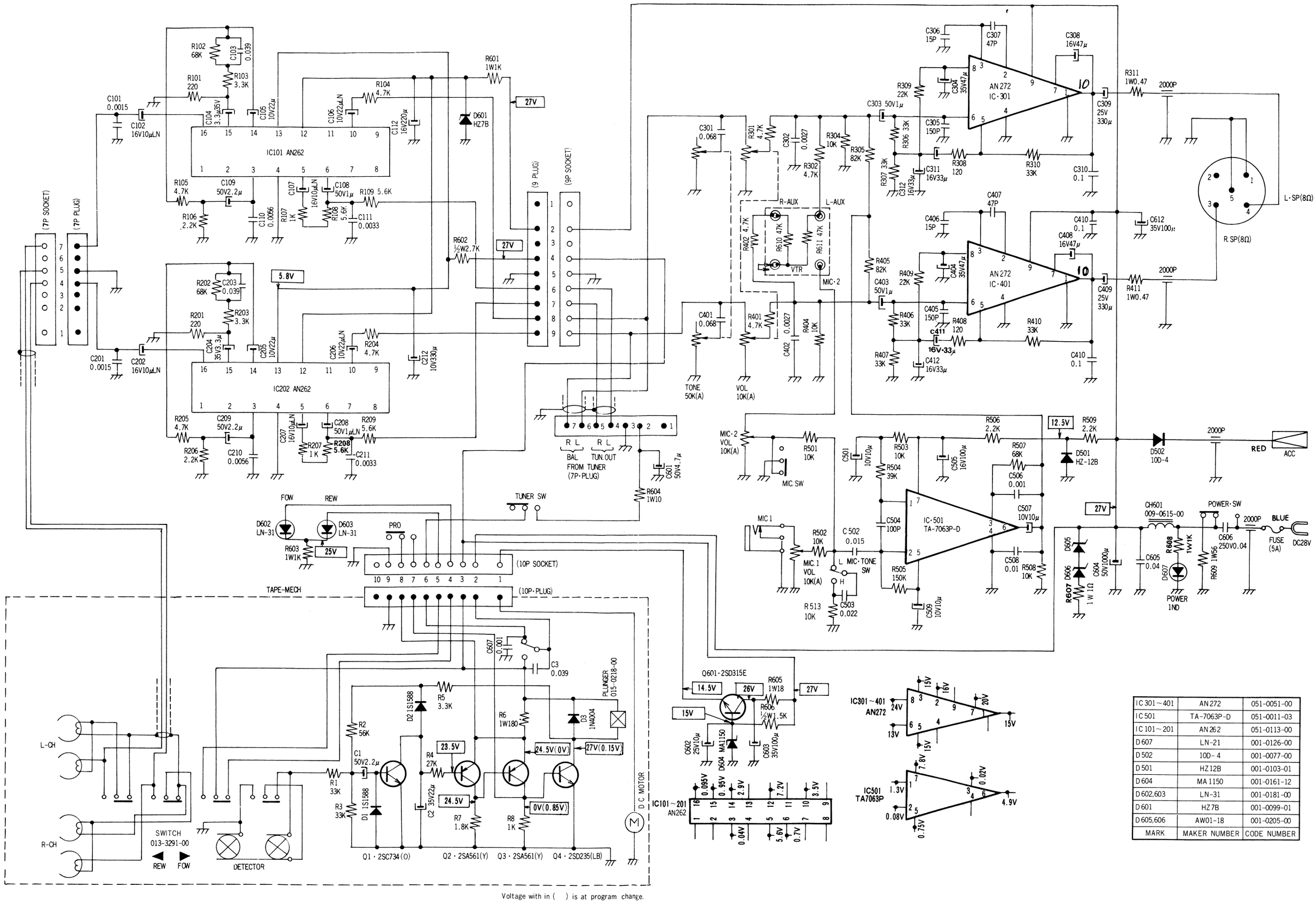

Voltage with in ( ) is at program change.

IC 301～401	AN 272	051-0051-00
IC 501	TA-7063P-D	051-0011-03
IC 101～201	AN 262	051-0113-00
D 607	LN-21	001-0126-00
D 502	10D-4	001-0077-00
D 501	HZ 12B	001-0103-01
D 604	MA 1150	001-0161-12
D 602,603	LN-31	001-0181-00
D 601	HZ 7B	001-0099-01
D 605,606	AW01-18	001-0205-00
MARK	MAKER NUMBER	CODE NUMBER

■SUBSTANC WIRING BOARD:

◎Main section