July '84 ®

SERVICE MANUAL

AM/FM(MPX)CAR RADIO

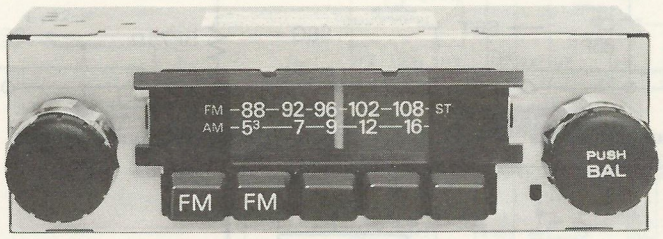

MODEL:AR-4729E

SPECIFICATIONS

- Circuit System :Superheterodyne
- Power Requirement :14.4V
- MPX Power :5W
- Speaker Load :4Ω
- Tuning Range :AM:525~1605KHz
  FM:87.9~108MHz
- IF Frequency :AM:455KHz
  FM:10.7MHz
- Out Side Dimension :160(W)×50(H)×80(D)mm

FEATURES

- Integration of power supply connector with speaker connector (9P connector construction).
- Circuit responsive to motor antenna (provided with 2P connector).
- FM stereo indicator
  (for FM stereo broadcastings, the channel is automatically switched over to stereo and red stereo indicator flashes)
- All monolithic ICS
- Improved high-input characteristics
- Light-weight construction

MITSUBISHI ELECTRIC AUSTRALIA PTY. LTD.

73-75 EPPING ROAD NORTH RYDE N.S.W.2113 SYDNEY AUSTRALIA

(1)-1 Instruments required

- Stabilized direct current power source (DC power source)
- Concentrated signal (genescope)
- Attenuator
- Stereo modulator
- RF signal generator (SSG)
- Sweep oscilloscope
- DC voltmeter (DC balvol)
- Frequency counter
- AC balvol
- Oscilloscope
- Automatic wave distortion meter
- Dummy antenna (Fig. 1, 2)

* Tuning condition : The tunings should be carried out slways at the power supply voltage of 13.2V ±0.2V.

(1)-2 Dummy antenna

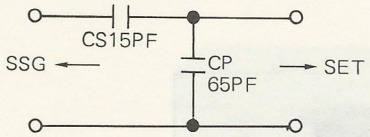

Fig. 1 AM tuning antenna

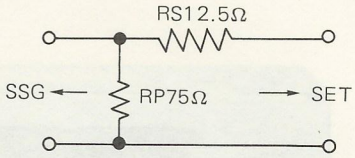

Fig. 2 FM tuning antenna

(1)-3 Connection

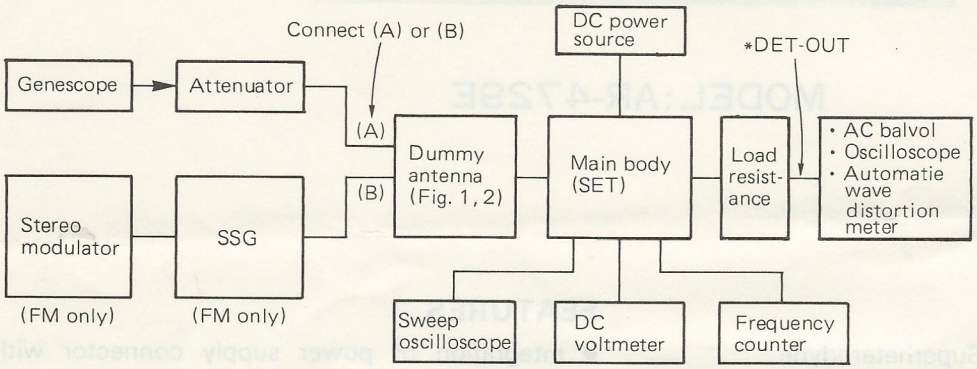

Fig. 3 Connection diagram

Cautions :

- The modulated wave distortion of SSG used should be less than 0.3% at 100% modulation.
- DC voltmeter should be calibrated by a reference DC voltage meter (0.5-class) before the use, because too large indication error is found sometimes.
- The cable between the dummy antenna and the antenna socket should be shortened as much as possible.
- Refer to the connection diagram for the main body (SET) power source and the terminal arrangement of SP connector.

(1)-4 Level setting

Sensitivity of sweep oscilloscope 100mm/V
Attenuator ..... 40dB(μV) at input terminal of dummy antenna
Volume position ..... min. (TONE, High)

(2) TUNING AND CHECK

(2)-1 AM part

Step		Connection: Input	Connection: Output	Conditions	Tuning	Check
1	RF (tracking adjustment) [in reference to the standard marker of concentrated signal]	Connect hot ⊕ and earth ⊖ side to J_1 and L_1 case respectively	Connect hot ⊕ and earth ⊖ side of the sweep oscilloscope to R7. R8 insertion pattern and the earth pattern respectively.	Set the tuner pointer on the highest position of the dial plate.	VC 3	1635±5KHz should be receivable.
2				Move the tuner pointer in accordance with the marker (1400 KHz).	VC1, 2	Max. position of the marker
3				Move the tuner pointer in accordance with the marker (600 KHz).	T 2	Max. position of the marker.
4				Set the tuner pointer on the lowest position of the dial plate.	—	490~510KHz (to be verified)
5				Repeat the step (1)-(4) twice or three times.		
6				If the tracking is significantly shifted when the tuner pointer is moved near to 1000KHz, 600KHz peak should be shifted by adjusting T1, 2 to satisfy overall balancing.		

(2)-2 FM part .... The chassis and the connector case should be connected by a lead wire as short as possible.

Step		Connection		Conditions	Tuning	Check
		Input	Output			
1	Tuning office sending circuit (connect 3(B) in Fig. 2)	Connect hot ⊕ and earth ⊖ side to J_1 and L_1 respectively	• Connect hot ⊕ side to 8-th terminal pattern side of IC151 • Connect earth ⊖ side to earth pattern of R162 and C156	Set the tuner pointer to F max. (max. receiving frequency).	VC103	109.0 MHz Verify coincidence of the dial scale with the received frequency.
				The received frequency changes up- and downwards when VC103 is turned. The received frequency range (width) should cover 89.5~108.5 MHz. It depends upon the lead length and its treatment of the tuner OSC coil.		
2	Tuning of ANT, RF circuit (")	"	"	Receiving frequency: 102 MHz	VC101, 102	Max. output
3		"	"	• The limiting sensitivity due to the tracking deviation should be less than 18dB(μV) (the sensitivity difference within 5dB). • When the sensitivity difference is over 5dB, change the lead length and the processing of ANT. RF and repeat the step (2). • (The capacitance of VC101 and 102 should not be C-min, max. at this condition). • Check the deviation of dial scale (the pointer should rest on each dial characters).		
4	IF tuning (")	"	• Connect hot ⊕ side of DC balvol to 7-th terminal (pattern side) of IC151 • Connect the earth ⊖ side to the terminal 13 (pattern side) of IC151	Received frequency: about 98 MHz	T151	0±60(μV)
5	FM-MPX tuning (")	"	• Connect hot ⊕ side to 13-th terminal of IC151 through a 100KΩ resistance • Connect earth ⊖ side to the earth pattern	Input signal zero (no signal) condition	VR202	19.0±0.1KHz
6	Separation adjustment (")	"	The same as in step (4)	Received frequency : about 98 MHz SG output : 54 dB(μV) stereo modulation	VR201	Best separation
				• The both of L → R and R → L should be adjusted to the best condition • The difference between L → R and R → L should be adjusted as low as possible		
7	SRC circuit check	"	"	• Received frequency : about 98 MHz • SG output : 30dB(μV) 1 8-th terminal voltage of IC201 2 7-th terminal voltage of IC201	——	Verify that 1 and 2 are 0.5 ±0.3V and 0.9±0.3V respectively
8	Check of NK circuit operation	"	"	• Received frequency : about 98 MHz • SG output : 20dB(μV)	——	Verify no malfunction (Check)

PARTS LIST

Ref. No.	Part No.	Description
RESISTORS & CAPACITORS		
VR301~303, 401,402,SW1	122L09501	VR-DOUBLE SHAFT(50K/100K)
VR202	127M03002	VR-SEMIFIXED(10K)
VR201	127M03003	VR-SEMIFIXED(20K)
CR251	149L00501	CR-MULTIPLE(CR-51011PA)
CR252	149L00602	CR-MULTIPLE(CR-51011PC)
VC1	202L01601	C-TRIMMER 100PE
VC2,3	202P10905	C-TRIMMER 60PF
VC101~103	202P21001	C-TRIMMER 10PF
SEMICONDLICTORS		
Q103	260P05403	TR 2SC738-C
Q102	260P17603	TR 2SC763-C
Q101	260P237A2	TR 2SK61-O
D101	264P05502	DIODE MV201
D401	264P13201	DIODE GM-3Z
IC251	266P31801	IC M51011P
IC1	266P33301	IC HA1199
IC151	266P36601	IC LA1140
IC401	266P38001	IC M51102L
IC201	266P78901	IC LA3370
IC152	266P916A2	IC TA78L008AP
IC153	267P30203	IC H8D1199
D1~3,102 151,152, 201,202	269M01201	DIODE 1S953/1S2076
COILS & TRANSFORMERS		
L104	320D04601	COIL-TRAP
L151	321P00502	COIL-CHOKE(2.2μ H)
L5	351D02103	COIL-CHOKE(4.7μ H)
L301	351P00108	TRANS-CHOKE(1mH)
L101	361M00101	COIL-RF(0.17μ H)
T2	373M00101	TRANS-OSC
L1	373M00702	COIL-RF(5.2μ H)
T101	374L00201	TRANS-IF
T1	374L03902	TRANS-IF
T151	374L04001	TRANS-IF

Ref. No.	Part No.	Description
OTHERS		
	242M33701	LEAD-CONNECTOR-6P/9S
PL2,3	253L02903	ASSY-LAMP(AM/FM)
PL4	253L02904	ASSY-LAMP(ST)
PL1	253L03001	ASSY-LAMP(G20/GRN)
	295K08404	TUNER
CF1	296P04101	CERAMIC-FILTER
CF2	296P04201	CERAMIC-FILTER
SW2	431L05002	SW-SLIDE
DIN-NC	449L02601	SOCKET DIN-7P
CP-NC	452K00104	CONNECTOR(9P)
	457L00101	HOLDER FUSE
	459M01101	PLUG DIN-5P SHORT
	550M08501	CUSHION-SW
	560K10803	CHASSIS
	590K28502	COVER-R
	590L94304	BACK-PLATE
	590L95001	SHIELD-CASE
	591M91801	HOLDER-PWB
	591M94602	HEAT-SINK
J1	591M96201	TERMINAL-N
	642M14601	INSULATOR
	642M17201	INSULATOR
	642M17203	INSULATOR
	704L15301	BUTTON-TUNER(AM)
	704L15302	BUTTON-TUNER(FM)
	707L10009	DIAL
	761M10301	POINTER

SCHEMATIC DIAGRAM

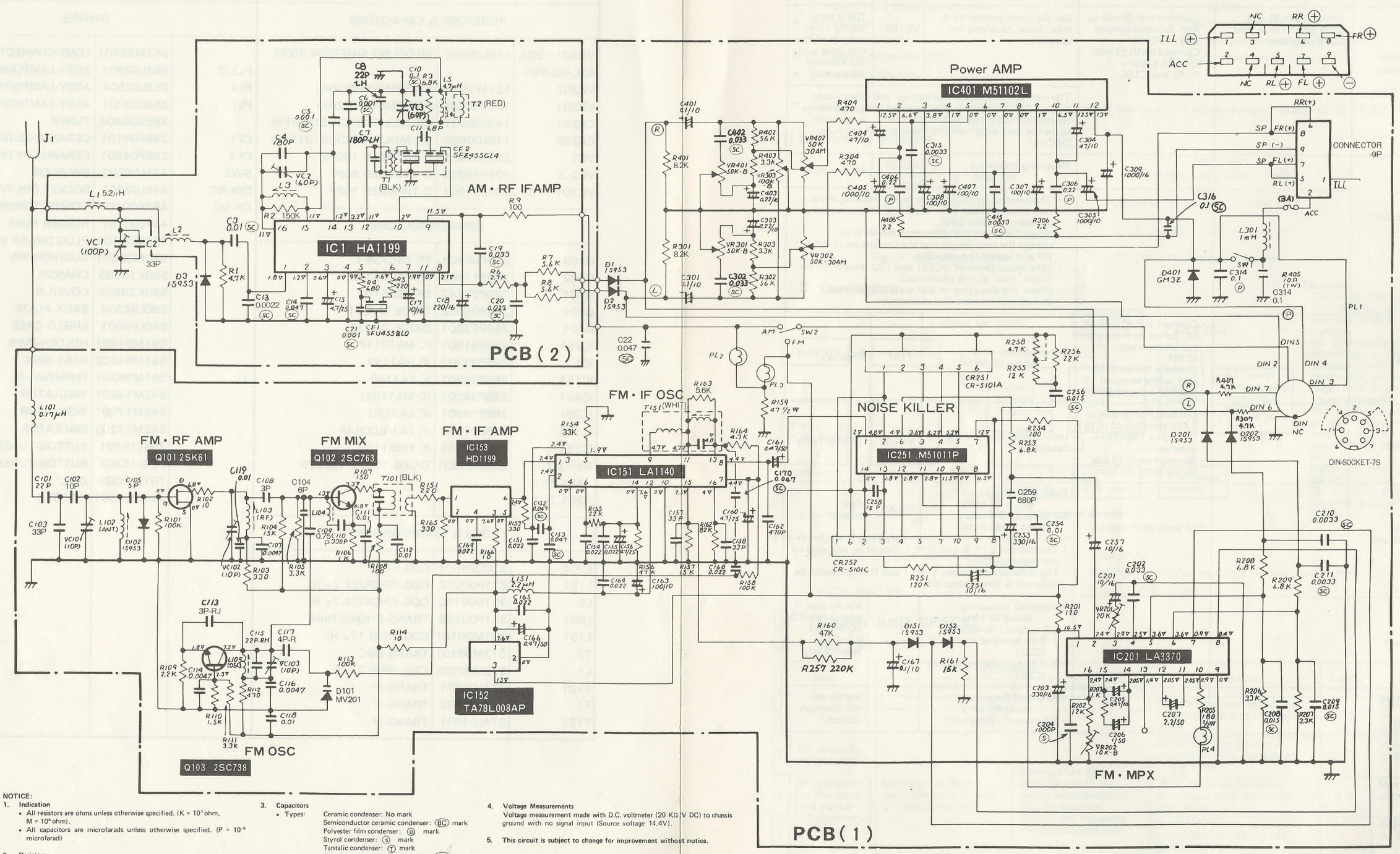

NOTICE:

1. **Indication**
   - All resistors are ohms unless otherwise specified. (K = 10^3 ohm, M = 10^6 ohm).
   - All capacitors are microfarads unless otherwise specified. (P = 10^{-6} microfarad)

2. **Resistors**
   - Types: Carbon resistor: No mark
     Solid resistor: (S) mark
     Printed resistor: mark
     Tip resistor: mark
   - Wattage: No indication = 1/4W. Other wattage will be indicated.
   - Tolerance

Mark	Tolerance
J	±5%
K	±10%

3. **Capacitors**
   - Types: Ceramic condenser: No mark
     Semiconductor ceramic condenser: (BC) mark
     Polyester film condenser: (P) mark
     Styrol condenser: (S) mark
     Tantalic condenser: (T) mark
     Aluminum electrolytic condenser: (Al) mark
     Tip condenser: mark
   - Tolerance

Mark	Tolerance	Mark	Tolerance
C	±0.25PF	M	±20%
D	±0.5PF	Z	+80% −20%
J	±5%	No mark	+100% −0
K	±10%		

4. **Voltage Measurements**
   Voltage measurement made with D.C. voltmeter (20 KΩ/V DC) to chassis ground with no signal input (Source voltage 14.4V).

5. This circuit is subject to change for improvement without notice.

PRINTED CIRCUIT BOARD (Pattern Side)

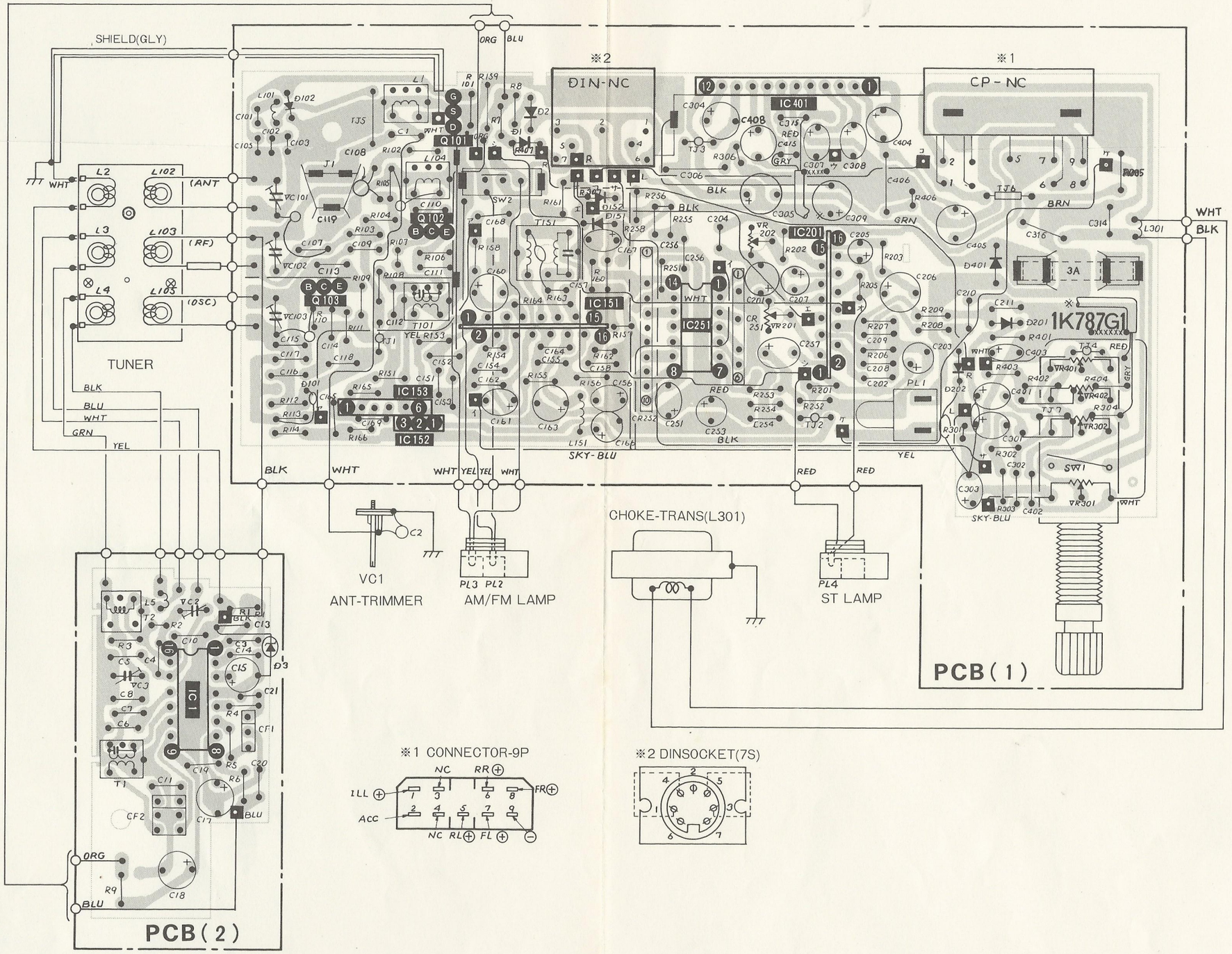

MEMO TO SERVICE AGENTS

Re: AR4729E COLT AM/FM RADIO

1. Phenomena Oscillation at FM Code (Whistle or Squeal)

2. Cause Deffective of HIC (CR - 5101-A)

3. Analysis result of HIC (CR-5101-A)

(i) OUTLINE AND SCHEMATIC DIAGRAM IS AS FOLLOWS;

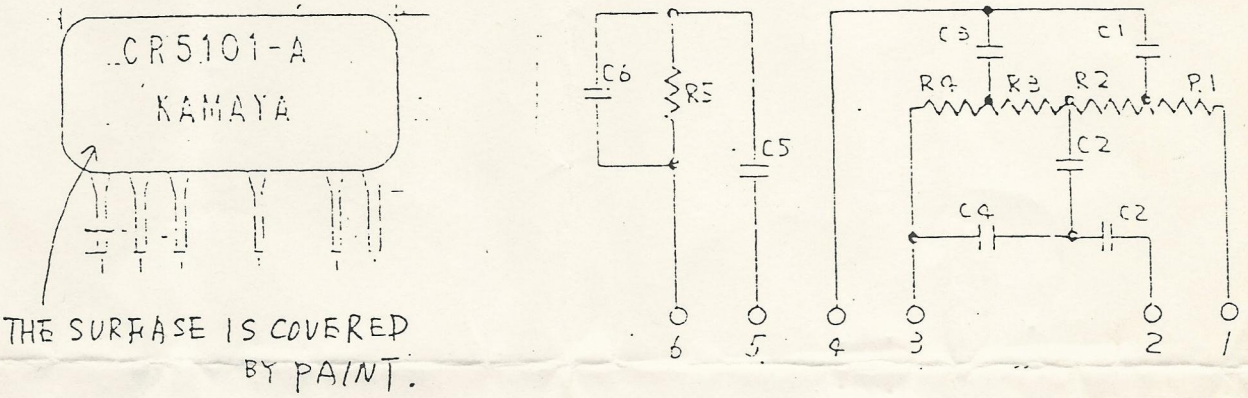

(2) The resistance value between terminal 1-3 on the above schematic diagram has gone high (85K OHM - 130KOHM unstable) compared with normal value. (18.8 K OHM)

(3) This cause is supposed to be as follows:
When soldering resistors has bad influence by expansion of covering by heat of solder tub, because thickness of covering was made too thin condition compared with normal thickness.

* fit 47kΩ across pin 1 + 3 of IC