Cassette auto radio 90DC568/69S

Service
Service
Service

For servicing hints for the tape-deck, see Service Manual Auto cassette deck P1-3

Service Manual

12 V

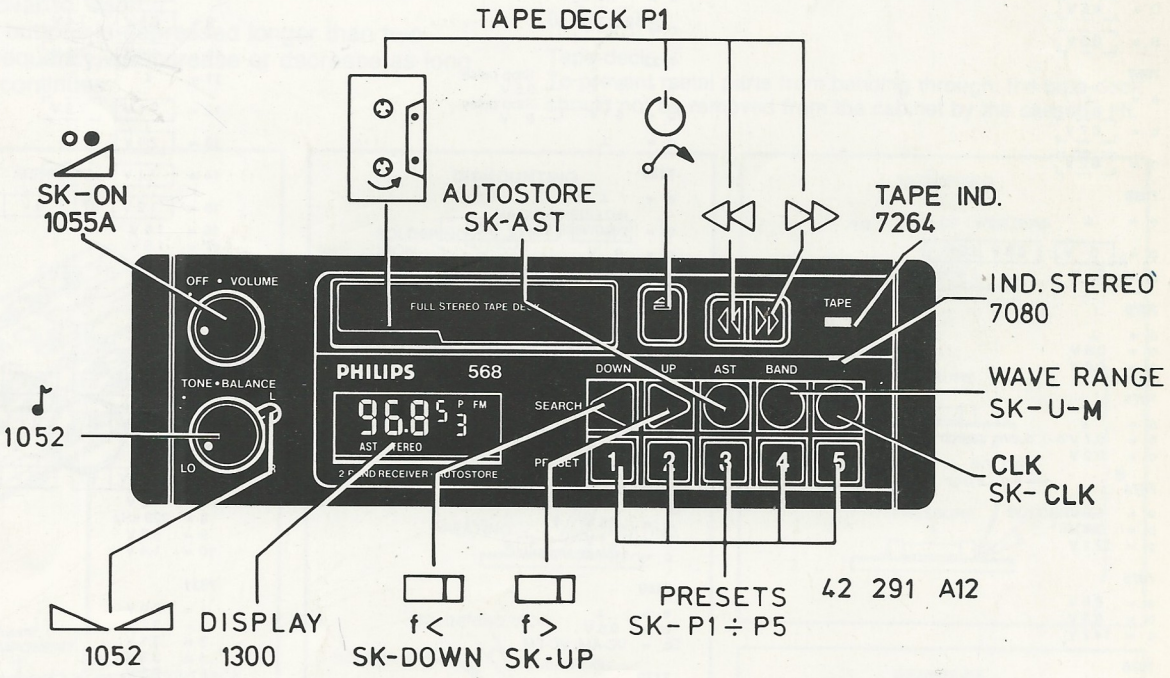

Documentation Technique Service Dokumentation Documentazione di Servizio Huolte-Ohje Manual de Servicio Manual de Serviçio
Subject to modification
GB 4822 725 21618
Printed in The Netherlands
© Copyright reserved
PHILIPS
Published by Service Consumer Electronics

(GB) TECHNICAL DATA

General

Power supply	: 14.4 V⎓
Memory battery	: 22EN9893
Dimensions (w × h × d)	: 180 × 51 × 149 mm

Radio

FM

FM	: 87.5-108 MHz
IF-FM	: 10.7 MHz
Sensitivity for 26dB S/R	: ⩽ 5 µV
Limitation α -3dB	: 8 µV
10dB Crosstalk	: 140 µV

AM

MW	: 531-1602 kHz
IF-AM	: 455 kHz
Sensitivity for 26dB S/R	: ⩽ 160 µV

Stereo Section	: Motorola C-QUAM stereo system
Stereo on sensitivity	
603 kHz	: 75 µV
1449 kHz	: 25 µV
Crosstalk (at 5 mV)	: ⩾ 18 dB

Cassette player

Number of tracks	: 2 × 2
Tape speed	: 4.76 cm/sec
Wow and flutter	: ⩽ 0.3%
Crosstalk	: ⩾ 40 dB

Amplifier

Output power (D ⩽ 10%)	: 4 × 3.0 W ± 1 dB/ 4 Ω
	: 4 × 3.8 W ± 1 dB/ 2 Ω
Bass	: – 6 dB at 125 Hz
Treble	: –14 dB at 10 kHz

1. +14.4V (RED)
2. N.C.
3. REAR SPKR. LEFT (GREEN)
4. SPKR. EARTH (BLACK/GREEN)
5. +14.4V PERMANENT (WHITE)
6. N.C.
7. REAR SPKR. RIGHT (GREY)

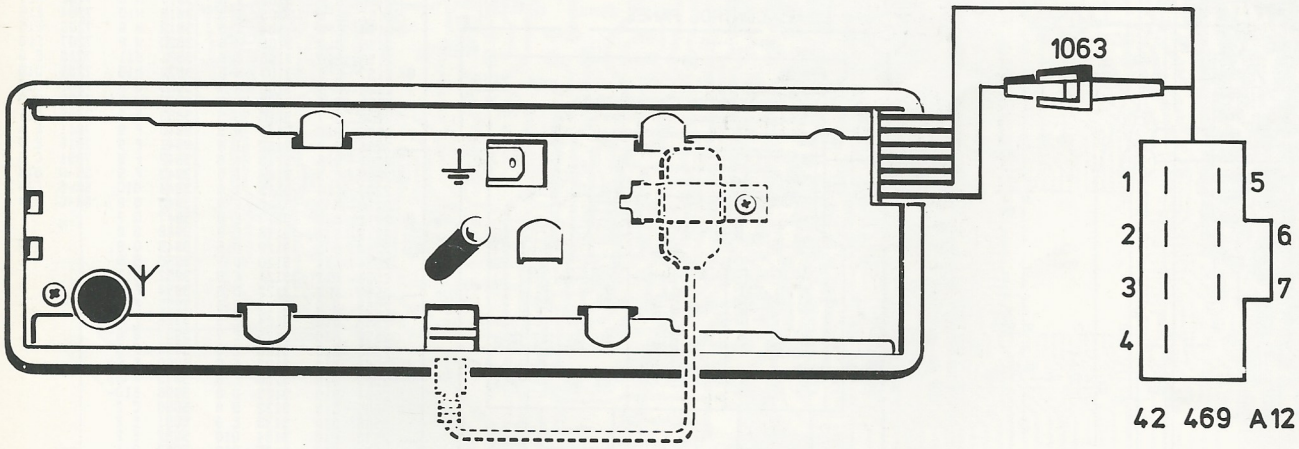

(GB) SERVICING HINTS

1. Repair

For repair to the radio section the mechanism need not be connected.

2. ESD

All ICs and many other semi-conductors are susceptible to electrostatic discharges (ESD). Careless handling during repair can reduce life drastically.
When repairing, make sure that you are connected with the same potential as the mass of the set via a wrist wrap with resistance. Keep components and tools also at this potential.

3. Service test programme

The test programme is called as follows:
Switch set off, depress keys △ ("up") and ▽ ("down") and switch the set on while keeping △ and ▽ depressed.
The µC now tests the RAM.
If P1 ... P5 are depressed, the set tunes to the preset frequency (see point 5).
The set functions normally.
The test programme can be ended by switching the set off.

4. Roger Bleep

If one of the push-buttons is depressed briefly, a Roger Bleep will be heard.

Tuning
If the "up" or "down" button is depressed briefly, the frequency will increase or decrease respectively.
If one of these buttons is depressed for approx 1 s, the µC will switch over to "search".
If one of these buttons is depressed longer than two seconds, the frequency will increase or decrease as long as depressing continues.

Remote search
The above story also applies to the "remote search" connection.

Programming
Tune to the frequency to be programmed.
If ONE of the P-buttons is kept depressed now until -5- appears on the display, the µC will program this frequency under the depressed P-button.
Moreover, a double tone will be audible (Roger Bleep).

5. Pre-programmed frequencies

To simplify the measurement and adjustment procedures, five frequencies have been pre-programmed on each wave range.
These frequencies can be called as follows:
Switch the set off, depress keys △ ("up") and ▽ ("down") and switch the set on while keeping △ and ▽ depressed.
The P keys are now programmed with test frequencies, the set is tuned to FM P1 and functions normally. The pre-programmed frequencies are:

	LCD	
P..	FM (MHz)	MW (kHz)
P1	87.50	531
P2	93.00	603
P3	98.00	999
P4	103.00	1449
P5	108.00	1602

The test programme ends when the set is switched off.

6. Decasing

Tape-deck
To prevent metal parts from bending through, the tape-deck should not be removed from the cabinet by the cassette lift.

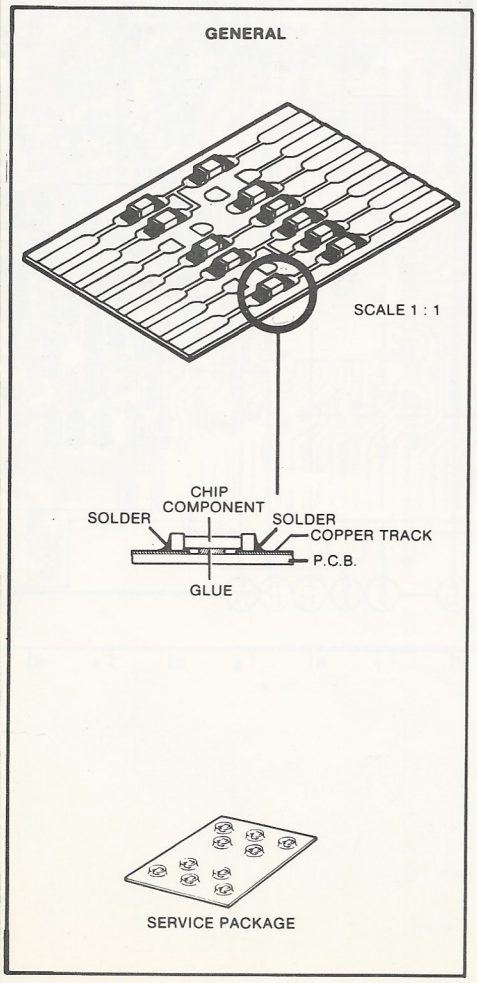

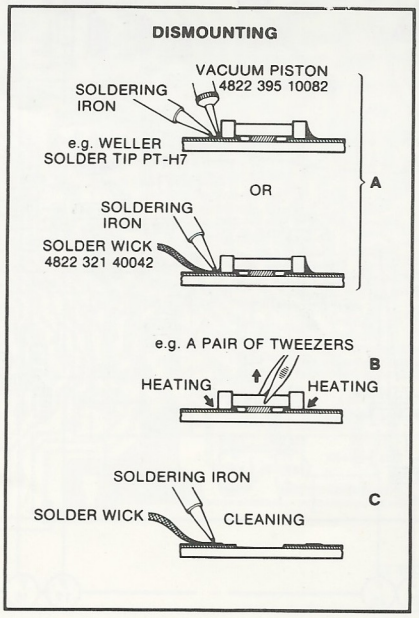

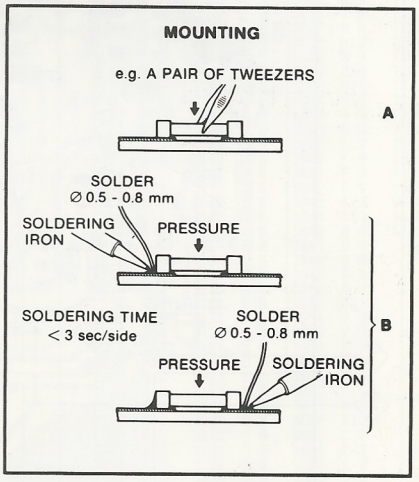

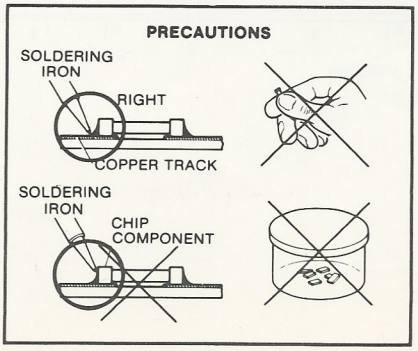

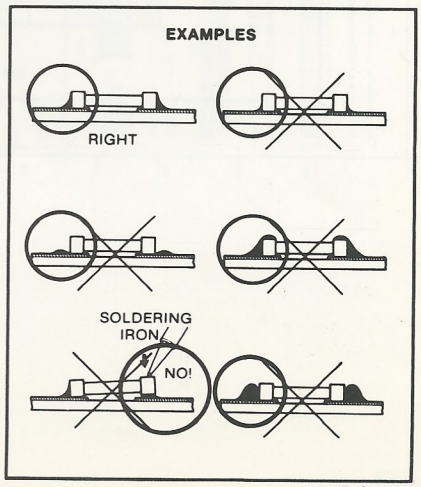

7010

e = [0.0 V] 4.5 V (during search)

b = 0.0 V 4.4 V (during search)
c = +3

7011

e = 0.7 V

b = [1.4 V] [0.0 V] 1.4 V (during search)

c = –

7012

e = 0.7 V

b = [1.4 V] [0.0 V] 1.4 V (during search)

c = –

7013

e = 5.1 V
b = 4.5 V
c = ⊥

7014

e = 7.1 V
b = 6.4 V
c = ⊥

7015

e = 6.5 V
b = 5.8 V
c = ⊥

7016

e = 6.5 V
b = 5.8 V
c = ⊥

7055

G = [0.1 V]

D = [7.8 V]

S = [1.9 V]

7056

G = [0 V]

D = [4.6 V]

S = [0.3 V]

7057

e = ⊥

b = [0.7 V]

c = [0.2 V]

7059

e = ⊥

b = [0 V] [0.6 V | LO1]

c = 0 V

7070

e = ⊥
b = 0.6 V
c = 0.0 V

7071

e = ⊥
b = 0.7 V ▷◁, during search
c = 0.0 V

7074

e = 5.0 V
b = 5.6 V
c = 12.1 V

7075

e = 8.6 V
b = 9.3 V
c = 14.2 V

7076

e = ⊥

b = [0.7 V] [0 V]

c = [0 V] [8.4 V]

7077

e = ⊥

b = [0 V] [0.7 V]

c = [8.6 V] [0 V]

7078

e = 8.6 V

b = [8.0 V] [8.4 V]

c = [8.6 V] [0 V]

7079

e = 8.6 V

b = [8.6 V] [7.9 V]

c = [0 V] [8.6 V]

7084

e = [1.1 V | LO1]

b = [0.0 V] [1.8 V | LO1]

c = [8.6 V]

7088

e = [0.9 V]

b = [1.7 V]

c = [8.6 V]

7089

G = [0 V]

D = [5.8 V]

S = ⊥

7090

1 = [8.6 V]

2 = [4.1 V]

3 = [8.6 V]

4 = [0.7 V]

5 = ⊥

6 = [2.3 V]

7 = [1.6 V]

8 = [7.0 V]

9 = [5.5 V]

7122

e = [0.9 V]

b = [1.6 V]

c = [8.6 V]

7123

e = 5 V — Stop pulse 0.5 V

b = 5 V — Stop pulse 0 V

c = ⊥

7124

e = ⊥

b = [0.0 V] [0.7 V | LO2]

c = 0 V

7125

e = ⊥

b = [0 V] [0.6 V]

c = 0 V

7158

e = 4.8 V
b = 5.4 V
c = 5.0 V

7159

e = 0.6 V
b = 1.1 V
c = VC-AM, VC-FM

7160

e = ⊥
b = 0.6 V
c = VC-AM, VC-FM

7170

e = 0.0 V
b = 0.0 V
c = 0.0 V

7172

e = 0.0 V
b = 0.0 V
c = 0.0 V Stop signal MW

7180

e = 0.0 V
b = 0.0 V
c = 0.0 V

7182

e = 0.0 V Stop signal FM
b = 0.0 V
c = 0.0 V

7183

e = ⊥

b = 0 V — 0.7 V stop pulse

c = 4.9 V — stop pulse 0 V

7190

e = 5 V — Stop pulse 0.5 V

b = 4.9 V during search

c = 8.7 V — Stop pulse 0.0 V

7191

e = 8.6 V

b = 8.7 V — stop pulse 8.0 V

c = 0.0 V — 8.6 V stop pulse 0.0 V

7505

1 = 7.0 V
2 = 6.9 V
3 = 6.9 V
4 = N.C.
5 = 6.9 V
6 = 13.4 V
7 = ⊥
8 = 13.4 V
9 = 6.9 V
10 = 14.3 V
11 = 14.3 V
12 = 6.9 V
13 = 7.0 V

7811

1 = [6.7 V] [7.5 V]

2 = [6.9 V]

3 = [6.9 V]

4 = [1.0 V]

5 = [0.5 V] [1.7 V]

6 = [6.7 V] [7.4 V]

7 = [6.8 V] [7.4 V]

8 = [6.8 V] [7.4 V]

9 = [6.6 V] [7.4 V]

10 = [6.6 V] [7.2 V]

11 = ⊥

12 = [7.1 V] [7.9 V]

13 = [2.0 V]

14 = [7.1 V] [7.9 V]

15 = [1.2 V | ST] [0 V | MO]

16 = 1.6 V

17 = 1.5 V

18 = [6.9 V]

7816

1 = 3.1 V
2 = 3.1 V

3 = [1.0 V | ST] [12 V | MO]

4 = [0.7 V | ST] [0 V | weak ST]

5 = ⊥

6 = [2.0 V | ST] [0.5 V | MO]

7 = 1.2 V
8 = 228 kHz
9 = 8.3 V
10 = 1.4 V

7831

1 = 3.9 V
2 = 3.2 V
3 = 3.1 V
4 = 3.5 V
5 = 3.5 V
6 = 2.2 V
7 = 2.7 V
8 = 0.8 V
9 = 13.1 V
10 = 13.1 V
11 = 0 V
12 = 13.0 V
13 = 3.5 V
14 = 3.5 V
15 = 2.5 V
16 = ⊥

[.... V] = FM

[.... V] = AM

1020	B05	2727	A05	2734	B04	2740	A02	2746	A01	2752	B02	2757	A03	3920	B03	3925	A01	3933	A02
2720	A05	2728	B03	2735	B04	2741	A02	2747	A02	2753	A03	2758	A03	3921	B04	3926	A01	3934	B03
2721	A04	2730	A03	2736	B04	2743	A02	2748	A01	2754	B02	3801	B05	3922	A02	3930	A02	3935	A03
2725	B04	2731	B03	2738	B03	2744	A02	2750	A01	2755	A03	3827	A01	3923	A03	3931	A02	3936	A04
2726	A05	2733	B04	2739	B05	2745	A01	2751	B02	2756	A03	3828	A02	3924	A01	3932	B02	3937	B02

3945	B02	3974	B03	3985	A04	3991	B01	5071	A05	7004	B02	7232	B04
3970	B01	3981	B05	3986	A05	3992	B01	5072	B04	7005	B01	7832	A04
3971	A02	3982	B05	3987	A05	3993	B01	5073	A03	7007	B04	7833	A02
3972	A04	3983	B05	3988	A04	3994	A04	7001	B01	7118	B01		
3973	B05	3984	B04	3989	B03	3995	B04	7003	A05	7119	B01		

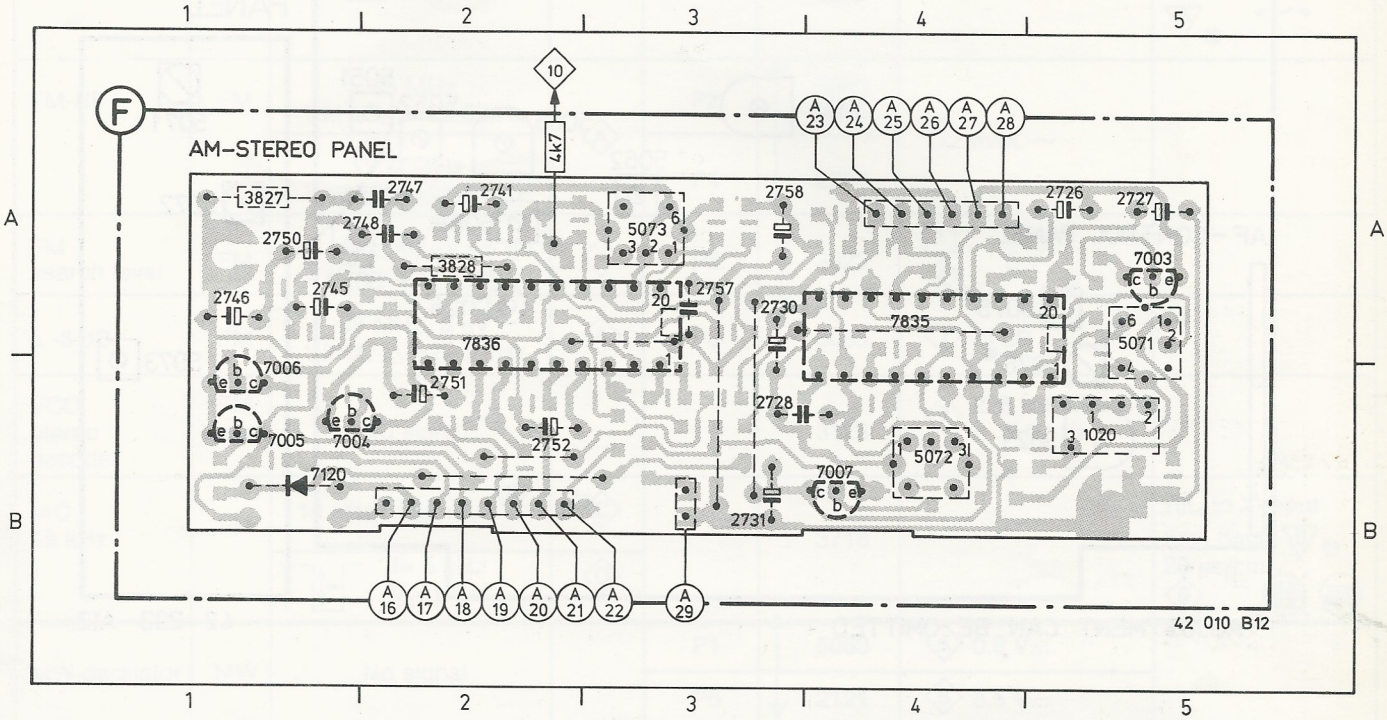

7003
e = ⊥
b = 0.7 V | 0.0 V
c = 0.0 V | 1.0 V

7004
e = ⊥
b = 0.6 V
c = 0.0 V

7005
e = ⊥
b = 0.7 V | 0.0 V
c = 0.0 V

7006
e = ⊥
b = 0.0 V
c = 4.8 V

7007
e = 4.6 V
b = 5.2 V
c = 8.0 V

7832
1 = 3.3 V
2 = 3.3 V
3 = 3.3 V
4 = ⊥
5 = N.C.
6 = 8.0 V
7 = 5.2 V
8 = 3.3 V
9 = 5.2 V
10 = 4.2 V
11 = 5.0 V
12 = N.C.
13 = ⊥
14 = 6.6 V
15 = 5.2 V
16 = N.C.
17 = 1.7 V
18 = 1.7 V
19 = 7.9 V
20 = 1.0 V

7833
1 = 7.4 V
2 = 7.4 V
3 = 3.7 V
4 = 1.7 V
5 = 1.5 V
6 = 8.0 V
7 = 0.8 V
8 = 0.8 V
9 = 0.0 V
10 = 0.0 V
11 = 2.1 V
12 = 0.9 V
13 = 0.6 V
14 = 0.6 V
15 = 12.0 V MO | 0.2 V ST
16 = ⊥
17 = 3.0 V
18 = 6.8 V
19 = 4.8 V
20 = 7.4 V

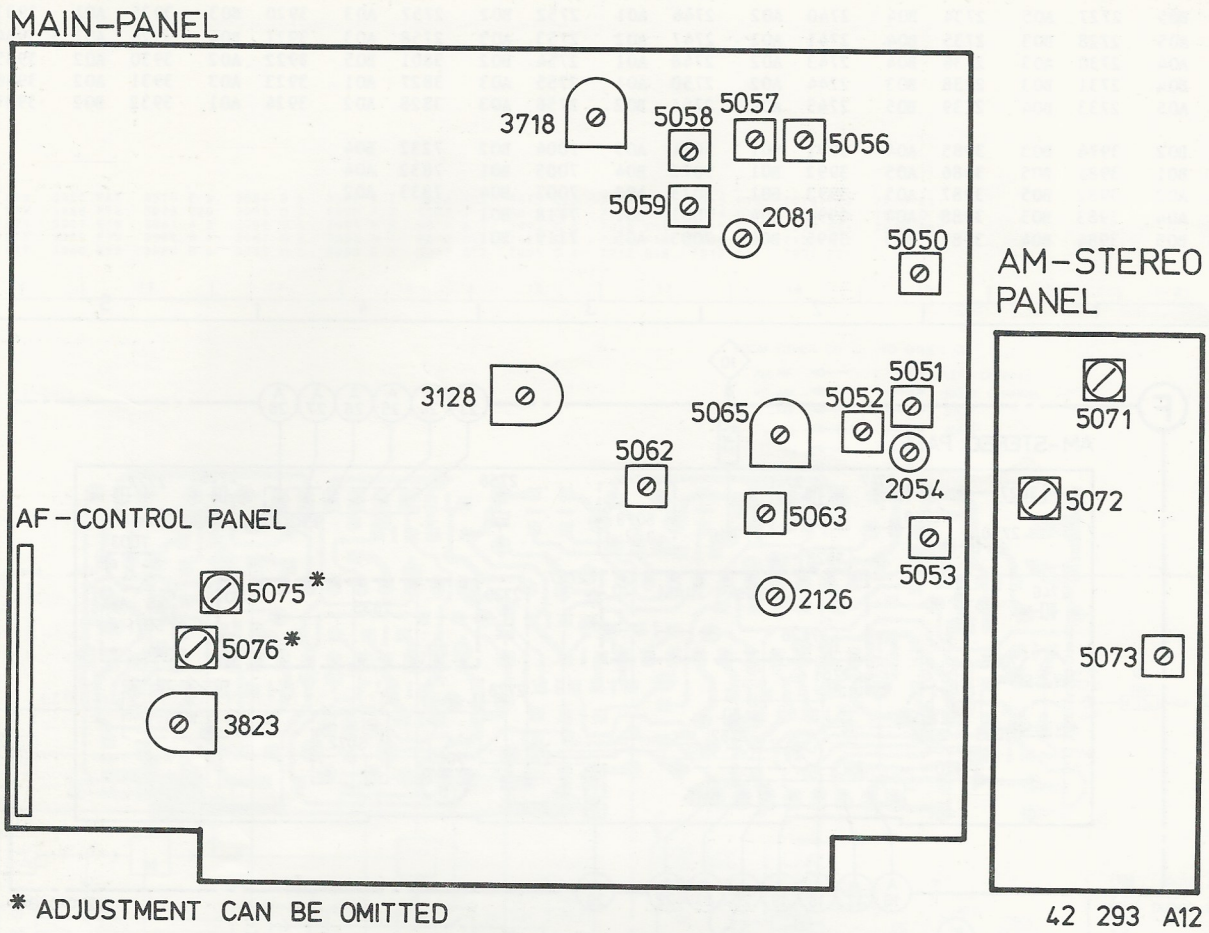

▲	Carbon film 0.2 W	70°C	5%
□	Carbon film 0.33 W	70°C	5%
■	Metal film 0.33 W	70°C	5%
●	Carbon film 0.5 W	70°C	5%
◪	Carbon film 0.67 W	70°C	5%
◪	Carbon film 1.15 W	70°C	5%

Ⓒ Chip component

△△*	Ceramic plate Tuning ≤ 120 pF NP.0 Others	 2% —20/+80%
●●*	Polyester flat foil	10%
□*	Metalized polyester flat film	10%
○□*	Polyester flat foil small size (Mylar)	10%
○△*	Polysterene film/foil	1%
■▲*	Tubular ceramic	
○*	Miniature single	
○○*	Subminiature tantalum	± 20%

*a	=	2,5 V
b	=	4 V
c	=	6,3 V
d	=	10 V
e	=	16 V
f	=	25 V
g	=	40 V
h	=	63 V
j	=	100 V
l	=	125 V
m	=	150 V
n	=	160 V
q	=	200 V
r	=	250 V
s	=	300 V
t	=	350 V
u	=	400 V
v	=	500 V
w	=	630 V
x	=	1000 V
A	=	1,6 V
B	=	6 V
C	=	12 V
D	=	15 V
E	=	20 V
F	=	35 V
G	=	50 V
H	=	75 V
I	=	80 V

27 037A/C

ADJUSTMENTS (For more information we refer to general alignment procedures)

Adjustment	SK						
FM oscillator	FM	No signal		P5	5053	3 8 V⎓	
FM-IF + detektor	FM	93 MHz wobbel 50 Hz, △f=300 kHz A ○	A	P2	5052		5 MAX.
					5062		8 A ●
FM-RF	FM	93 MHz 1 kHz, △f=22.5 kHz	A	P2	5050 5051	1 max. ~	
		103 MHz 1 kHz, △f=22.5 kHz		P4	2054		
FM search level	FM	98 MHz, 40 µV ± 5 µV 1 kHz, △f=22.5 kHz	A	P3	3823	1 4 5 V 0 V	
α -3 dB	FM	98 MHz, 8 µV 1 kHz, △f=22.5 kHz	A	P3	3065	1 -3 dB	
VCO stereo decoder	FM stereo	No signal			3128	7 228 kHz ± 0.5 kHz	
IAC 19 kHz	FM	19 kHz : 250 mV B	C		3718		⎍ to X-input time base B ● 20 µs/cm 9
		f= 5 kHz V_0=1.5 V	D				
MW-oscillator	MW	No signal		P1	5063	6 0.8 V⎓	
				P5	2121	6 8.5 V⎓	
AM-IF	MW	531 kHz 1 kHz, AM=30%	B	P1	5071	1 max.~	
					5072		
MW-RF	MW	603 kHz 1 kHz, AM=30%	B	P2	5059	1 max.~	
		1449 kHz 1 kHz, AM=30%		P4	2081		
		1602 kHz 1 kHz, AM=30%		P5	5057		
VCO AM-stereo decoder	AM	No signal			5073	10 3.640 MHz ± 1 kHz	

↕ Repeat

[1] LO1 = 0 V, LO2 = 0 V

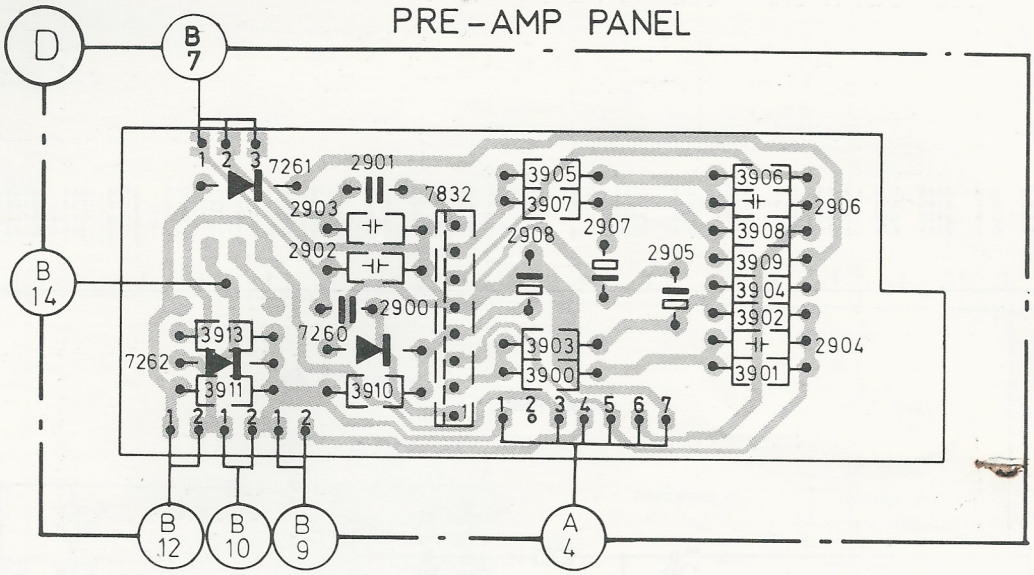

Misc	7262		7261	7260		7832								
Cap			2903	2901	2900		2908	2907	2905				2906	
			2902										2904	
Res					3910		3905	3903		3906	3904			
		3913					3907			3908	3902			
		3911					3900			3909	3901			

42 742 B12

7832

1 = 1.3 V ▷ 0.0 V
2 = 0.8 V ▷ 0.0 V
3 = 5.4 V ▷ 0.0 V
4 = 9.8 V ▷ 0.0 V
5 = ⊥
6 = 5.4 V ▷ 0.0 V
7 = 0.8 V ▷ 0.0 V
8 = 1.3 V ▷ 0.0 V

CHECKS (For more information we refer to general alignment procedures)

Check	SK				Setting of controls		
α -3 dB	FM	98 MHz : 1 mV 1 kHz, △f=22.5 kHz	A	P3		1 0 dB (=775 mV)	
		98 MHz : 8 μV 1 kHz, △f=22.5 kHz				1 -3 dB	
SDS	FM stereo	98 MHz : 1 mV stereo signal	A	P3	+	1 R: 0 dB 2 L: 0 dB	
		98 MHz : 70 μV stereo –R				2 L- 1 R = 10 dB ±2 dB	
Crosstalk	FM stereo	98 MHz : 1 mV stereo signal	A	P3	+	1 R: 0 dB 2 L: 0 dB	
		98 MHz : 1 mV stereo –R				2 L- 1 R: > 20 dB	
Search level FM	FM	93 MHz : 40 μV ± 5 μV	A	Press search		display 93 MHz	
IAC	FM	τ Vp T B τ =10 μs T=300 μs Vp=50 mV	C				9 25-50 μs B
26 dB	FM	98 MHz : 8 μV 1 kHz, △f=22.5 kHz	A	P3		1 2 V~ (0 dB)	
		98 MHz : 8 μV without mod.				1 -26 dB	
	MW	999 kHz : 160 μV 1 kHz, AM=30%	B	P3		1 2 V~ (0 dB)	
		999 kHz : 160 μV without mod.				1 -26 dB	
Stereo on sensitivity MW	MW	603 kHz:75 μV ± 25 μV Stereo, without mod.	B	P2	SSG	Stereo LED just lights	
		1404 kHz:25 μV ± 10 μV Stereo, without mod.		P4			
Crosstalk	MW	999 kHz : 5 mV stereo, 1kHz, AM= 30%	B	P3	+	1 R: 0 dB 1 L: 0 dB	
		999 kHz : 5 mV stereo, –R				1 L- 1 R: > 22 dB	
Freq. response MW	MW	999 kHz : 5 mV 1 kHz, AM= 30%	B	P3		1 0 dB	
		999 kHz : 5 mV 4 kHz : AM= 30%				1 -3 dB ± 2 dB	
		999 kHz : 5 mV 9 kHz : AM= 30%				1 -50 dB ± 5 dB	

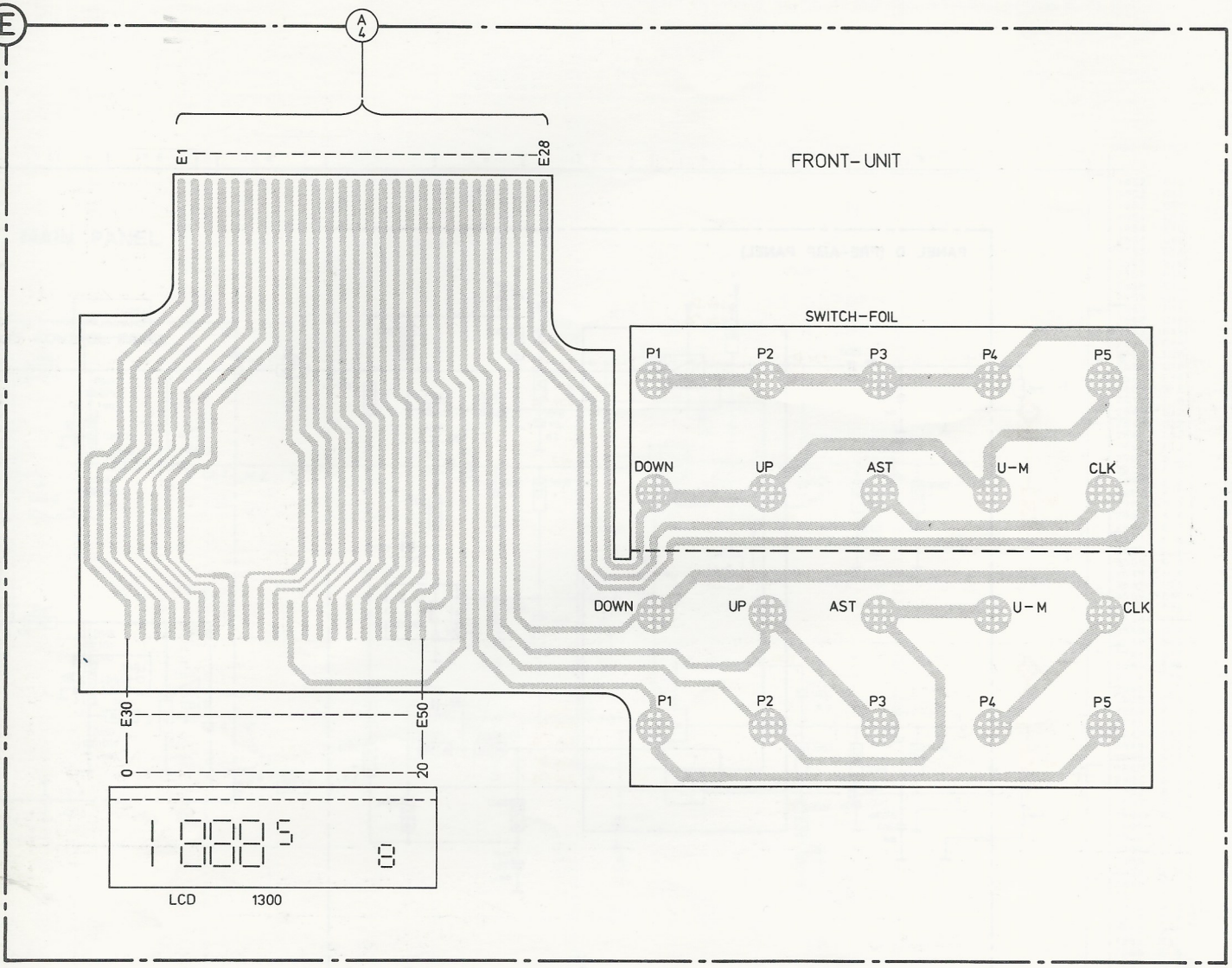
E
A
4
E1
E28
FRONT-UNIT
SWITCH-FOIL
P1
P2
P3
P4
P5
DOWN
UP
AST
U-M
CLK
DOWN
UP
AST
U-M
CLK
P1
P2
P3
P4
P5
E30
E50
0
20
LCD
1300

42 150 C12

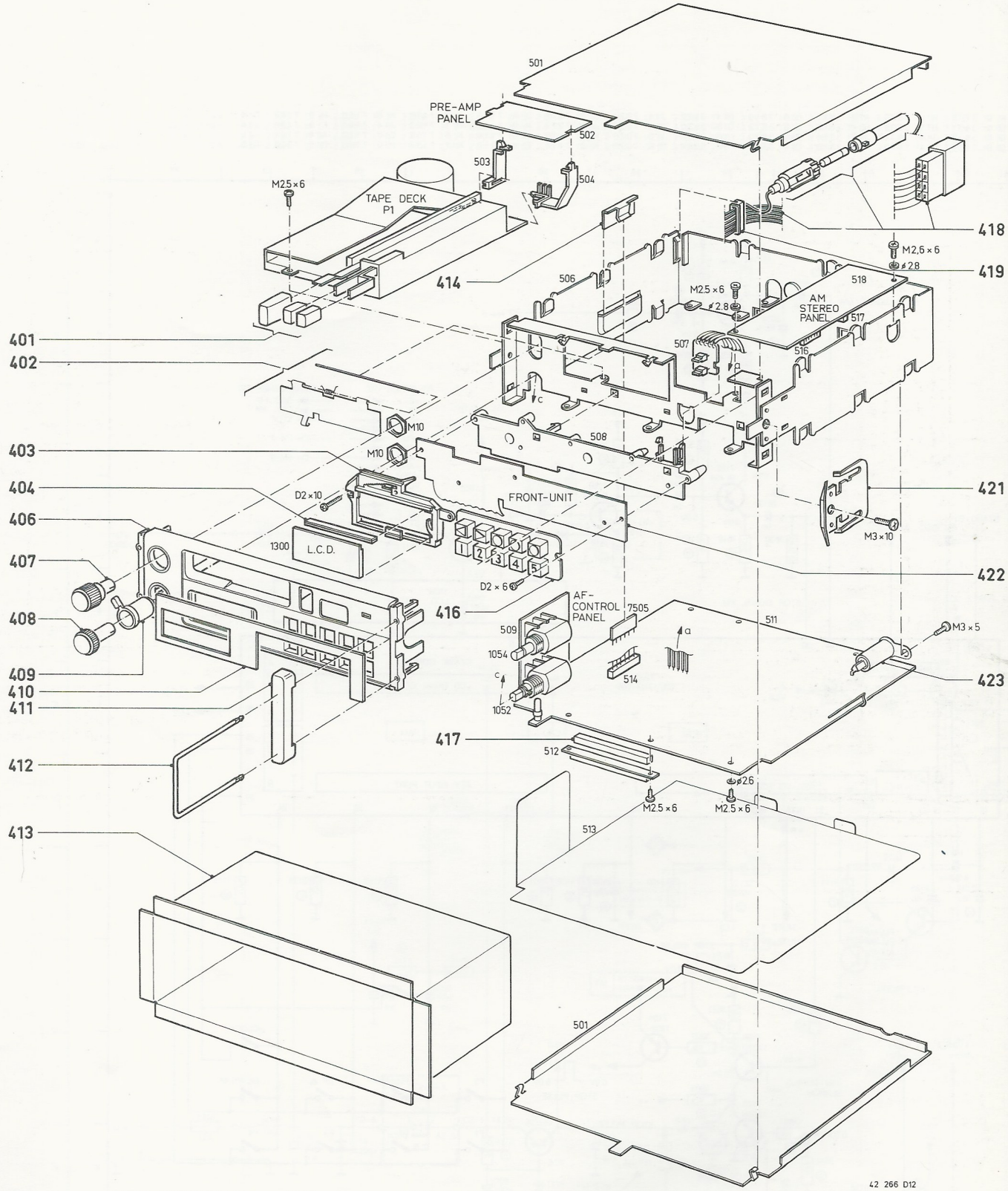

401	4822 410 25911	412	4822 404 20437
402	4822 423 40894	413	4822 443 30463
403	4822 380 20216	414	4822 255 40528
404	4822 466 61174	416	4822 410 90098
406	4822 460 10862	417	4822 466 61173
407	4822 413 31469	418	4822 321 22446
408	4822 413 31459	419	4822 403 52901
409	4822 413 31458	421	4822 492 90087
410	4822 454 11994	422	4822 466 10526
411	4822 460 20696	423	4822 266 20103

2054	Trimmer 10 pF	4822 125 50199
2081	Trimmer 20 pF	4822 125 50201
2121	Trimmer 10 pF	4822 125 50199
2205	Elco 2200 µF-16 V 20%	4822 124 21681
2564 } 2565 }	Elco 1000 µF-10 V 20%	4822 124 21694

1052	Potm. 100 kW×100 KB	4822 102 30447
1055	Potm. 47 KA×2+SW	4822 102 30456
3128	Potm. trimmer 22 k	4822 100 10051
3718	Potm. trimmer 1 k	4822 100 10037
3823	Potm. trimmer 470E	4822 100 10036

5050	FM-RF	4822 156 10666
5051	FM-RF	4822 156 10664
5052	IFT-FM	4822 156 21167
5053	FM OSC	4822 157 50973
5055	5.6 µH	4822 157 51216
5056	AM-RF	4822 157 52047
5057	AM-RF	4822 157 51509
5058	AM-RF	4822 157 51061
5059	AM-RF	4822 157 51505
5061	IFT-AM	4822 153 20233
5062	FM-Det	4822 156 21328
5063	AM-OSC	4822 157 51844
5066	Chocke	4822 156 21109
5067	22 µH	4822 157 52286
5071	AM-IF	4822 156 30863
5073	AM-ST VCO	4822 156 10825
5075	AF-TRAP 9 kHz	4822 156 21289
5076	AF-TRAP 9 kHz	4822 156 21289

1N4001	4822 130 31438
1N4148	4822 130 30621
2-1K261UE	4822 130 32299
BA482	4822 130 34955
BAV10	4822 130 30594
BB112	4822 130 32159
BB204B	4822 130 34449
BB204G	5322 130 34825
BAS16	5322 130 31928
BZX79/C9V1	4822 130 30862
BZX79/C5V6	4822 130 34173
SLP251B (green)	4822 130 31402

1402C	4822 130 40937
1502D	4822 130 44195
1702N	4822 130 41729
1802N	4822 130 41456
2SK193	4822 130 42511
2SK519	4822 130 42512
BC547	4822 130 44257
BC549C	4822 130 44246
BD137	4822 130 40823
BF494	4822 130 44195

D1713AG-578	4822 209 11513
AN7254	4822 209 81944
AN7273	4822 209 81773
MC13020P	4822 209 83511
TDA1001B/V4	4822 209 81462
TDA1510	4822 209 81317
TEA5580	4822 209 81882
ULN-3841A	4822 209 83512
µPC1228H	4822 209 81928

Miscellaneous

1020	Cer. filter 455 kHz	4822 242 71778
1056	Cer. filter 10.7 MHz	4822 242 71341
1057	Cer. filter 10.7 MHz	4822 242 71341
1061	Crystal 4.5 MHz	4822 242 70761
1063	Fuse 3.15A (T)	4822 253 30027
1064	Lamp 14 V 80 mA (orange)	4822 134 40757
1300	Display LCD	4822 130 90436

© Chips 50 V NP0 S1206		
1 pF	5%	4822 122 32479
1,2 pF	5%	4822 122 33013
1,5 pF	5%	4822 122 31792
1,8 pF	5%	4822 122 32087
2,2 pF	5%	4822 122 32425
3,3 pF	5%	4822 122 32079
3,9 pF	5%	4822 122 32081
4,7 pF	5%	4822 122 32082
5,6 pF	5%	4822 122 32506
6,8 pF	5%	4822 122 32507
8,2 pF	5%	4822 122 32083
10 pF	5%	4822 122 31971
12 pF	5%	4822 122 32139
15 pF	5%	4822 122 32504
18 pF	5%	4822 122 31769
22 pF	10%	4822 122 31837
27 pF	5%	4822 122 31966
33 pF	5%	4822 122 31756
39 pF	5%	4822 122 31972
47 pF	5%	4822 122 31772
56 pF	5%	4822 122 31774
68 pF	5%	4822 122 31961
82 pF	10%	4822 122 31839
100 pF	5%	4822 122 31765
120 pF	5%	4822 122 31766
150 pF	5%	4822 122 31767
180 pF	2%	4822 122 31794
220 pF	5%	4822 122 31965
270 pF	5%	4822 122 32142
330 pF	10%	4822 122 31642
390 pF	5%	4822 122 31771
470 pF	5%	4822 122 31727
560 pF	5%	4822 122 31773
680 pF	5%	4822 122 31775
820 pF	5%	4822 122 31974
1 nF	10%	5322 122 31647
1,2 nF	5%	4822 122 31807
1,5 nF	10%	4822 122 31781
1,8 nF	10%	4822 122 32153
2,2 nF	10%	4822 122 31644
2,7 nF	10%	4822 122 31783
3,3 nF	10%	4822 122 31969
3,9 nF	10%	4822 122 32566
4,7 nF	10%	4822 122 31784
5,6 nF	10%	4822 122 31916
6,8 nF	10%	4822 122 31976
10 nF	10%	4822 122 31728
12 nF	10%	5322 122 31648
15 nF	10%	4822 122 31782
18 nF	10%	4822 122 31759
22 nF	10%	4822 122 31797
27 nF	10%	4822 122 32541
33 nF	10%	4822 122 31981
47 nF	10%	4822 122 32542
56 nF	10%	4822 122 32183
100 nF	10%	4822 122 31947
180 nF	10%	4822 122 32915
220 nF	20%	4822 122 32715

© Chips 0,125 W S1206 NP0		
0 E	jumper	4822 111 90163
1 E	5%	4822 111 90184
1,1 E	5%	4822 111 90377
1,2 E	5%	4822 111 90378
1,3 E	5%	4822 111 90379
1,5 E	5%	4822 111 90381
1,6 E	5%	4822 111 90382
1,8 E	5%	4822 111 90383
2 E	5%	4822 111 90384
2,2 E	5%	5322 111 90104
2,4 E	5%	4822 111 90385
2,7 E	5%	4822 111 90386
3 E	5%	4822 111 90387
3,3 E	5%	4822 111 90388
3,6 E	5%	4822 111 90389
3,9 E	5%	4822 111 90391
4,3 E	5%	4822 111 90392

© Chips 0,125 W S1206		
4,7 E	5%	5322 111 90376
5,1 E	5%	4822 111 90393
5,6 E	5%	4822 111 90394
6,2 E	5%	4822 111 90395
6,8 E	5%	4822 111 90254
7,5 E	5%	4822 111 90396
8,2 E	5%	4822 111 90397
9,1 E	5%	4822 111 90398
10 E	2%	5322 111 90095
11 E	2%	4822 111 90338
12 E	2%	4822 111 90341
13 E	2%	4822 111 90343
15 E	2%	4822 111 90344
16 E	2%	4822 111 90347
18 E	2%	5322 111 90139
20 E	2%	4822 111 90352
22 E	2%	4822 111 90186
24 E	2%	4822 111 90355
27 E	2%	5322 111 90105
30 E	2%	4822 111 90356
33 E	2%	4822 111 90357
36 E	2%	4822 111 90359
39 E	2%	4822 111 90361
43 E	2%	5322 116 90125
47 E	2%	4822 111 90217
51 E	2%	4822 111 90365
56 E	2%	4822 111 90239
62 E	2%	4822 111 90367
68 E	2%	4822 111 90203
75 E	2%	4822 111 90371
82 E	2%	4822 111 90124
91 E	2%	4822 111 90375
100 E	2%	5322 111 90091
110 E	2%	4822 111 90335
120 E	2%	4822 111 90339
130 E	2%	4822 111 90164
150 E	2%	5322 111 90098
160 E	2%	4822 111 90345
180 E	2%	5322 111 90242
200 E	2%	4822 111 90348
220 E	2%	4822 111 90178
240 E	2%	4822 111 90353
270 E	2%	4822 111 90154
300 E	2%	4822 111 90156
330 E	2%	5322 111 90106
360 E	1%	4822 111 90288
360 E	2%	4822 111 90358
390 E	2%	5322 111 90138
430 E	2%	4822 111 90362
470 E	2%	5322 111 90109
510 E	2%	4822 111 90245
560 E	2%	5322 111 90113
620 E	2%	4822 111 90366
680 E	2%	4822 111 90162
750 E	2%	5322 111 90306
820 E	2%	4822 111 90171
910 E	2%	4822 111 90372
1 k	2%	5322 111 90092
1,1 k	2%	4822 111 90336
1,2 k	2%	5322 111 90096
1,3 k	2%	4822 111 90244
1,5 k	2%	4822 111 90151
1,6 k	2%	5322 111 90265
1,8 k	2%	5322 111 90101
2 k	2%	4822 111 90165
2,2 k	2%	4822 111 90248
2,4 k	2%	4822 111 90289
2,7 k	2%	4822 111 90569
3 k	2%	4822 111 90198
3,3 k	2%	4822 111 90157
3,6 k	2%	5322 111 90107
3,9 k	2%	4822 111 90571
4,3 k	2%	4822 111 90167
4,7 k	2%	5322 111 90111
5,1 k	2%	5322 111 90268
5,6 k	2%	4822 111 90572
6,2 k	2%	4822 111 90545

© Chips 0,125 W S1206			1U
6,8 k	2%	4822 111 90544	
7,5 k	2%	4822 111 90276	
8,2 k	2%	5322 111 90118	
9,1 k	2%	4822 111 90373	
10 k	2%	4822 111 90249	
11 k	2%	4822 111 90337	
12 k	2%	4822 111 90253	
13 k	2%	4822 111 90509	
15 k	2%	4822 111 90196	
16 k	2%	4822 111 90346	
18 k	2%	4822 111 90238	
20 k	2%	4822 111 90349	
22 k	2%	4822 111 90251	
24 k	2%	4822 111 90512	
27 k	2%	4822 111 90542	
30 k	2%	4822 111 90216	
33 k	2%	5322 111 90267	
36 k	2%	4822 111 90514	
39 k	2%	5322 111 90108	
43 k	2%	4822 111 90363	
47 k	2%	4822 111 90543	
51 k	2%	5322 111 90274	
56 k	2%	4822 111 90573	
62 k	2%	5322 111 90275	
68 k	2%	4822 111 90202	
75 k	2%	4822 111 90574	
82 k	2%	4822 111 90575	
91 k	2%	5322 111 90277	
100 k	2%	4822 111 90214	
110 k	2%	5322 111 90269	
120 k	2%	4822 111 90568	
130 k	2%	4822 111 90511	
150 k	2%	5322 111 90099	
160 k	2%	5322 111 90264	
180 k	2%	4822 111 90565	
200 k	2%	4822 111 90351	
220 k	2%	4822 111 90197	
240 k	2%	4822 111 90215	
270 k	2%	4822 111 90302	
300 k	2%	5322 111 90266	
330 k	2%	4822 111 90513	
360 k	2%	4822 111 90515	
390 k	2%	4822 111 90182	
430 k	2%	4822 111 90168	
470 k	2%	4822 111 90161	
510 k	2%	4822 111 90364	
560 k	2%	4822 111 90169	
620 k	2%	4822 111 90213	
680 k	2%	4822 111 90368	
750 k	2%	4822 111 90369	
820 k	2%	4822 111 90205	
910 k	2%	4822 111 90374	
1 M	2%	4822 111 90252	
1,1 M	5%	4822 111 90408	
1,2 M	5%	4822 111 90409	
1,3 M	5%	4822 111 90411	
1,5 M	5%	4822 111 90412	
1,6 M	5%	4822 111 90413	
1,8 M	5%	4822 111 90414	
2 M	5%	4822 111 90415	
2,2 M	5%	4822 111 90185	
2,4 M	5%	4822 111 90416	
2,7 M	5%	4822 111 90417	
3 M	5%	4822 111 90418	
3,3 M	5%	4822 111 90191	
3,6 M	5%	4822 111 90419	
3,9 M	5%	4822 111 90421	
4,3 M	5%	4822 111 90422	
4,7 M	5%	4822 111 90423	
5,1 M	5%	4822 111 90424	
5,6 M	5%	4822 111 90425	
6,2 M	5%	4822 111 90426	
6,8 M	5%	4822 111 90235	
7,5 M	5%	4822 111 90427	
8,2 M	5%	4822 111 90237	
9,1 M	5%	4822 111 90428	
10M	5%	5322 111 91141	

NO DISPLAY - CHECK PIN 13 of PLL for 4.8 VOLTS.

IF NONE - CHECK TXISTOR 7075 BD137 (BACK LH SIDE)

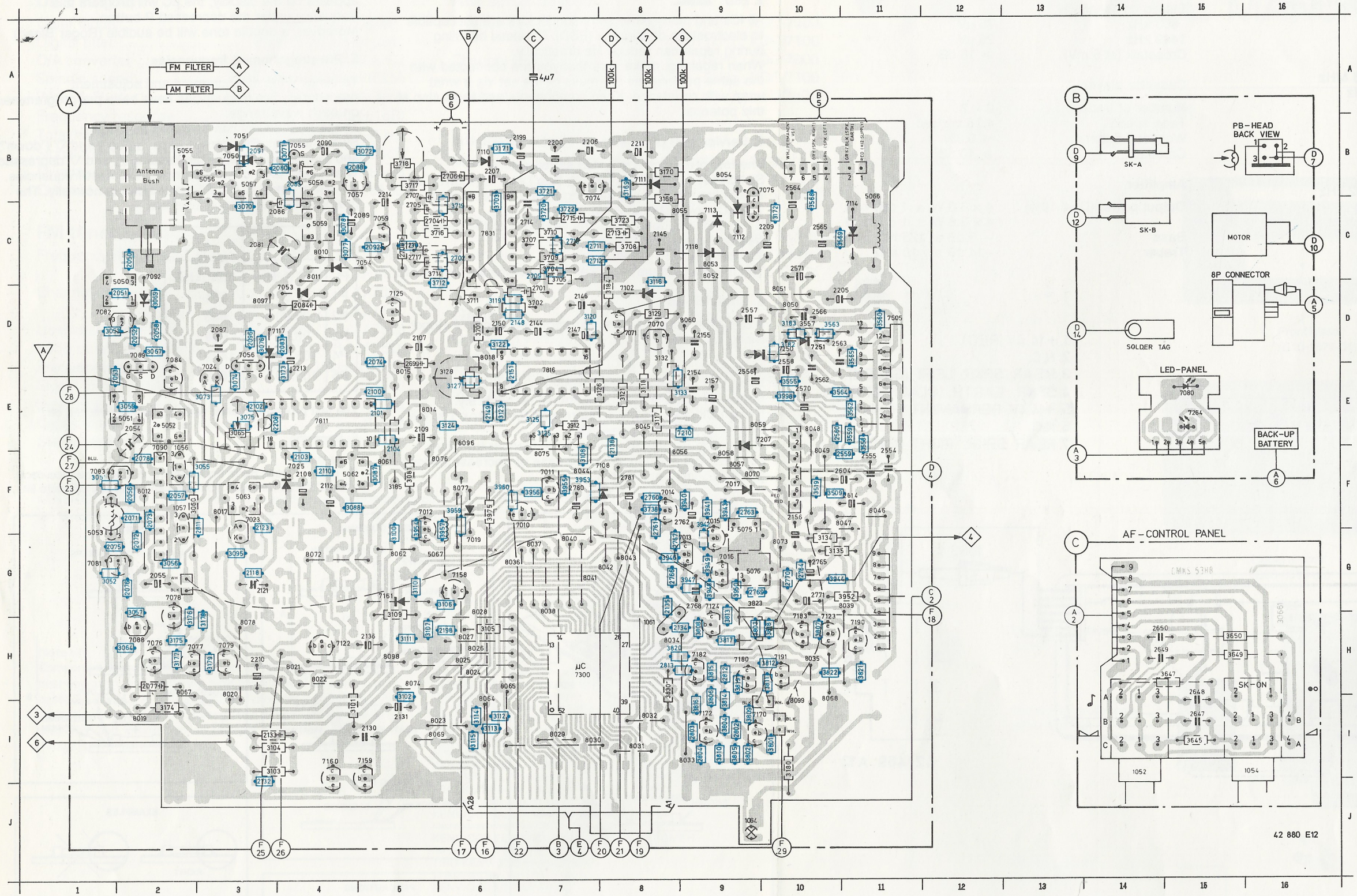

	1052	I14	2704	C 5	3178	H 3	5075	G 9
	1055	I16	2705	C 5	3179	H 3	5076	G 9
	1056	E 2	2706	B 6	3180	I10	7010	F 7
	1057	F 2	2707	B 5	3182	D10	7011	F 7
	2050	C 2	2708	C 5	3183	D10	7012	F 5
	2051	D 1	2709	C 7	3184	D 8	7013	G 9
A	2052	D 2	2710	C 7	3185	F 5	7014	F 8
	2053	E 1	2711	C 7	3509	F10	7015	F 9
	2054	E 2	2712	C 7	3519	F10	7016	G 9
	2055	G 2	2713	C 8	3522	E 8	7017	F 9
	2056	F 2	2714	C 7	3523	E 7	7019	G 6
	2057	F 2	2715	C 7	3542	E 9	7023	F 3
	2058	D 2	2717	C 5	3543	E 7	7024	E 3
	2071	F 2	2720	C 7	3555	E10	7025	F 4
	2072	G 2	2760	F 8	3557	D10	7050	B 3
	2073	F 2	2761	G 8	3558	E11	7051	B 3
	2074	D 5	2762	F 9	3559	E11	7053	D 4
	2075	G 1	2763	F 9	3560	D11	7054	C 5
	2077	H 2	2764	G10	3562	E11	7055	B 4
	2078	F 2	2765	G10	3563	D10	7056	D 3
	2078	G 2	2766	G 8	3564	E10	7059	C 5
	2080	B 3	2767	G 8	3565	D11	7070	D 8
	2081	C 3	2768	G 9	3568	B10	7071	D 8
	2083	D 4	2769	G 9	3569	C10	7074	C 7
	2084	D 4	2770	G10	3645	I15	7075	B10
	2085	B 4	2771	G10	3647	H15	7076	H 2
C	2086	C 3	2780	F 7	3649	H15	7077	H 2
	2087	D 3	2781	F 8	3650	H15	7078	G 2
	2088	B 4	2802	I 9	3701	D 6	7079	H 3
	2089	C 5	2803	I 9	3702	D 7	7080	E15
	2090	B 4	2804	I 9	3703	C 6	7081	G 1
	2091	B 3	2811	F 3	3704	C 7	7082	D 1
	2092	C 5	2812	H 9	3705	C 7	7083	F 1
	2096	D 3	2813	H 8	3707	C 7	7084	D 2
	2100	E 5	3020	C 3	3708	C 8	7088	H 2
	2101	E 5	3051	F 1	3709	C 7	7089	D 2
D	2102	E 3	3052	G 1	3710	C 7	7090	E 2
	2103	F 4	3053	D 1	3711	D 6	7092	C 2
	2104	F 5	3055	F 3	3712	D 5	7102	D 8
	2107	D 5	3056	G 2	3714	C 5	7108	F 7
	2108	F 4	3057	H 2	3716	C 5	7110	B 6
	2109	E 5	3059	E 2	3717	B 5	7111	B 8
	2110	F 4	3060	F 2	3718	B 5	7112	C 9
	2112	F 4	3064	H 2	3719	C 6	7113	C 9
	2118	G 3	3065	E 3	3722	C 7	7114	C11
	2121	G 3	3067	D 2	3723	C 8	7117	D 3
E	2123	F 3	3069	D 2	3738	F 8	7118	C 9
	2130	I 5	3071	B 4	3803	H 9	7122	H 4
	2131	I 5	3072	B 5	3804	I 9	7123	H10
	2132	J 3	3073	E 2	3805	I 9	7124	G 9
	2133	I 3	3074	E 3	3806	I 9	7125	F 5
	2134	H 8	3075	E 3	3807	H10	7128	H 9
	2135	G 8	3076	D 3	3808	H 9	7158	G 6
	2136	H 5	3077	C 4	3809	I 9	7159	I 5
	2138	E 8	3078	C 4	3810	I 9	7160	I 4
	2144	D 7	3081	F 5	3811	H10	7161	G 5
F	2145	C 8	3087	F 5	3812	H10	7170	I 9
	2146	D 7	3088	F 4	3813	H 9	7172	I 9
	2147	D 7	3095	G 3	3814	I 9	7180	H 9
	2148	D 6	3100	G 5	3815	H 9	7183	H10
	2149	E 6	3101	I 4	3816	I 9	7191	H10
	2150	D 6	3102	I 5	3817	H 9	7192	H11
	2151	I 3	3103	I 3	3818	H10	7204	E15
	2154	E 9	3104	I 3	3819	H 9	7205	E15
	2155	D 9	3105	H 6	3820	H 8	7207	E10
	2156	F10	3106	G 6	3821	H11	7210	E 9
G	2157	E 9	3107	H 5	3822	H10	7250	D10
	2198	H 6	3108	F 7	3823	G 9	7251	D10
	2199	B 7	3109	H 5	3830	H 8	7300	H 7
	2200	B 7	3110	G 5	3853	F 7	7505	D11
	2205	D10	3111	H 5	3940	F 9	7811	E 4
	2206	B 7	3112	I 6	3941	F 9	7816	E 7
	2207	B 6	3113	I 6	3942	F 9	7831	C 6
	2208	E 3	3114	I 6	3943	F 9	SK-A	B14
	2209	C10	3115	I 6	3944	G10	SK-B	C14
	2210	H 3	3116	C 8	3946	G 8	SK-C	D14
H	2211	B 8	3117	E 8	3947	G 9		
	2213	E 4	3118	E 8	3948	G 9		
	2214	B 5	3119	D 6	3949	G 9		
	2554	F11	3120	D 7	3950	G 9		
	2555	F11	3121	E 8	3952	G11		
	2556	E 9	3122	D 6	3954	F 5		
	2557	D 9	3123	E 6	3955	F 7		
	2558	D10	3124	E 6	3956	F 7		
	2559	F10	3125	E 7	3957	G 6		
	2560	E10	3126	E 8	3959	F 6		
I	2562	E10	3127	E 6	3960	F 6		
	2563	D10	3128	E 6	3975	F 6		
	2564	B10	3129	D 8	3998	E10		
	2565	C10	3132	D 8	5050	C 2		
	2566	D10	3133	E 8	5051	E 2		
	2570	E10	3134	G10	5052	E 2		
	2571	C10	3135	G10	5053	G 1		
	2604	F11	3168	C 8	5055	B 2		
	2614	F11	3169	B 8	5056	B 3		
	2647	H15	3170	B 8	5057	B 3		
	2648	I15	3171	B 6	5057	B 4		
	2649	H14	3172	C10	5058	B 4		
	2650	G14	3173	E 3	5059	C 4		
	2699	E 5	3174	I 2	5062	F 4		
	2701	D 7	3175	H 2	5063	F 3		
	2702	C 6	3176	H 2	5066	B11		
	2703	C 5	3177	H 2	5067	G 5		

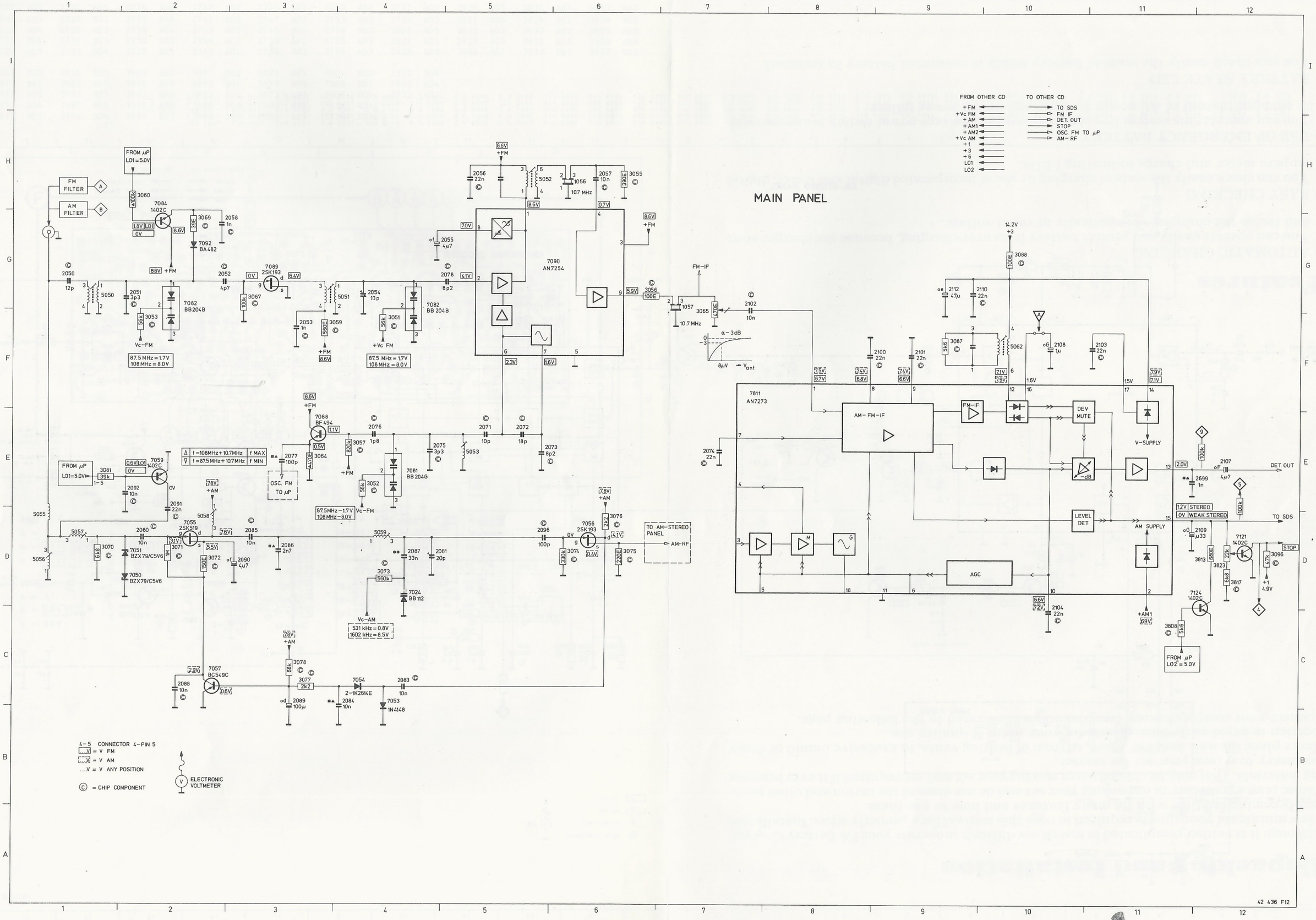

1056	H06	2053	F03	2058	G02	2075	E04	2081	D04	2087	D04	2092	E02	2103	F11	2108	F10	2113	C09	3055	H06	3064	E03	3071	D02	3076	D06	3088	G10	5050	G01	5056	D01	7024	D04	7054	C04	7081	E04	7089	G03	7811	F07
1057	G07	2054	G04	2071	E05	2076	E04	2083	C04	2088	C02	2096	D05	2104	D10	2109	D12	2699	E12	3056	G06	3065	G07	3072	D02	3077	C03	3808	C12	5051	G04	5057	D01	7025	F10	7055	D02	7082	G02	7090	G05		
2050	G01	2055	G04	2072	E05	2077	E03	2084	C04	2089	C03	2100	F09	2105	E07	2110	G09	3051	F04	3057	E04	3067	G03	3073	D04	3078	C03	3813	D11	5052	H05	5058	D02	7050	D02	7056	D06	7083	G04	7092	G02		
2051	G02	2056	H05	2073	E05	2078	G05	2085	D03	2090	D03	2101	F09	2106	C08	2111	D08	3052	E04	3059	F03	3069	G02	3074	D06	3081	E01	3817	D12	5053	E05	5059	D04	7051	D02	7057	C02	7084	H02	7121	D12		
2052	G02	2057	H06	2074	E07	2080	D02	2086	D03	2091	E02	2102	G07	2107	E12	2112	G09	3053	F02	3060	H02	3070	D01	3075	D06	3087	F09	3818	D12	5055	D01	5062	F10	7053	C04	7059	E02	7088	E03	7124	C11		

| | | |

| | | |

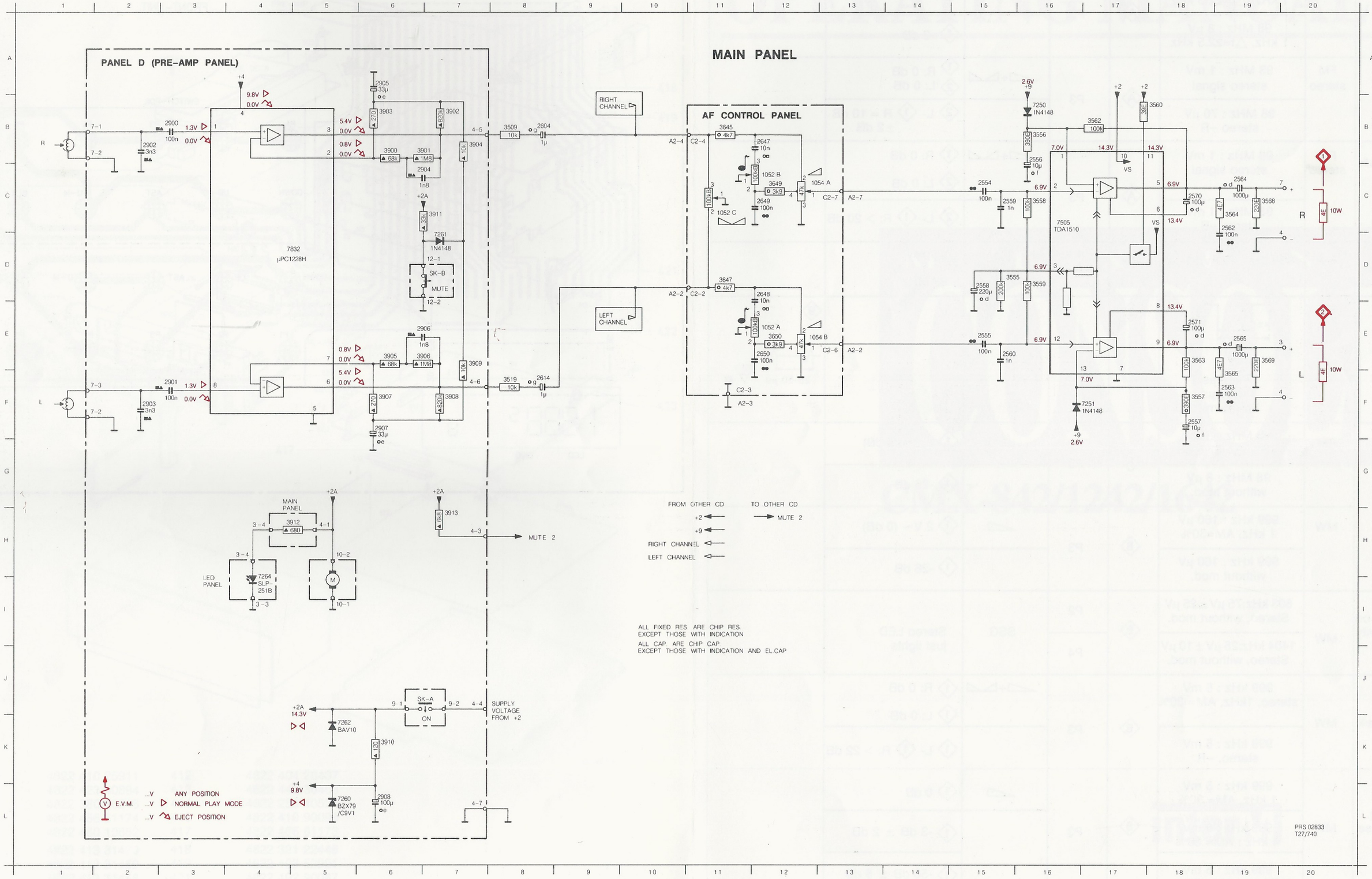
PANEL D (PRE-AMP PANEL)
MAIN PANEL
AF CONTROL PANEL
7832
μPC1228H
7505
TDA1510
RIGHT CHANNEL
LEFT CHANNEL
SK-B
MUTE
MAIN PANEL
LED PANEL
7264
SLP-251B
MUTE 2
SK-A
ON
SUPPLY VOLTAGE FROM +2
E.V.M.
ANY POSITION
NORMAL PLAY MODE
EJECT POSITION
FROM OTHER CD
TO OTHER CD
+2
+9
RIGHT CHANNEL
LEFT CHANNEL
MUTE 2
ALL FIXED RES. ARE CHIP RES.
EXCEPT THOSE WITH INDICATION
ALL CAP. ARE CHIP CAP.
EXCEPT THOSE WITH INDICATION AND EL CAP.
PRS 02833
T27/740

| | | |