# Cassette auto radio 90DC468/00

Service
Service
Service

For tape-deck information see Service Manual Auto cassette deck P6 version 5.

# Service Manual

12 V

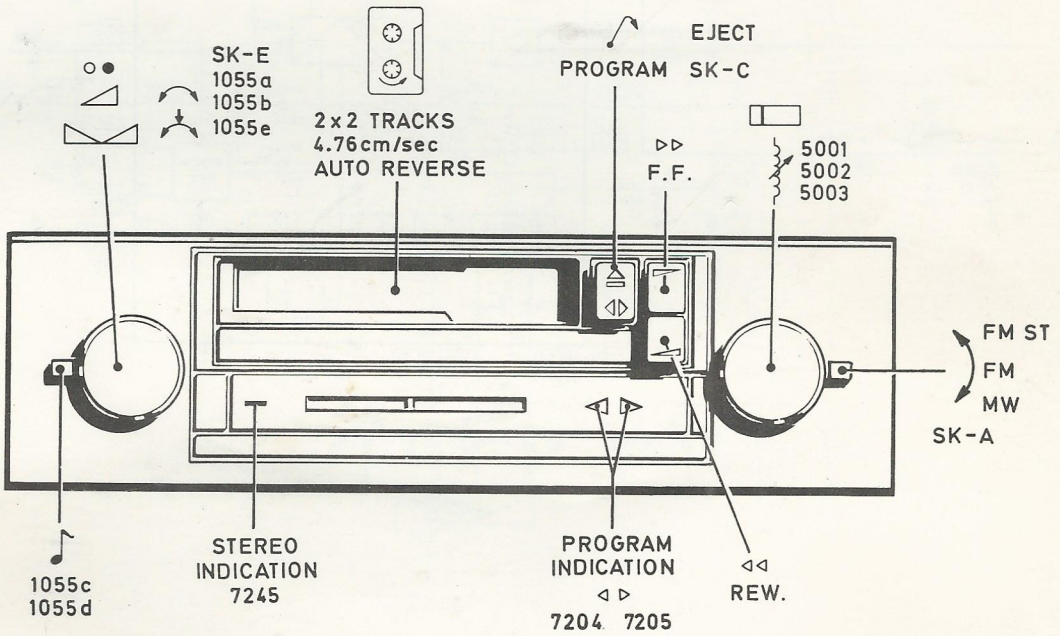


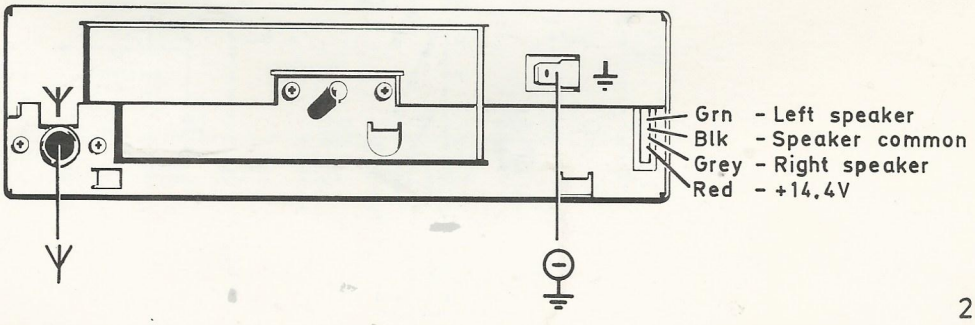


26482

Documentation Technique Service Dokumentation Documentazione di Servizio Huolte-Ohje Manual de Servicio Manual de Serviço

"Pour votre sécurité, ces documents doivent être utilisés par des spécialistes agréés, seuls habilités à réparer votre appareil en panne".

Subject to modification
4822 725 20833
Printed in The Netherlands
©Copyright reserved

PHILIPS
Published by
Service Consumer Electronics

## (GB) TECHNICAL DATA

### General

| | |
|---|---|
| Power supply | : 14.4 V⎓ |
| Dimensions (wxhxd) | : 180×51×135 mm |

### Radio

| | |
|---|---|
| MW | : 520-1605 kHz |
| FM | : 87.5-108 MHz |
| IF-AM | : 468 kHz |
| IF-FM | : 10.7 MHz |
| Sensitivity for 26 dB S/N ratio | : ⩽ 150 µV (MW)<br>⩽ 8 µV (FM) |
| Limitation α –3 dB | : ⩽ 30 µV |
| 10 dB stereo crosstalk | : 150 µV |

### Cassette player

| | |
|---|---|
| Number of tracks | : 2 × 2 |
| Tape speed | : 4.76 cm/sec |
| Wow and flutter | : ⩽ 0.35% |
| Crosstalk | : ⩾ 40 dB |

### Amplifier

| | |
|---|---|
| Output power (D⩽10%) | : 2 × 5.0 W ± 1 dB/4 Ω<br>: 2 × 6.5 W ± 1 dB/2 Ω |
| Bass | : – 6 dB at 125 Hz |
| Treble | : –14 dB at 10 kHz |

## (F) CARACTERISTIQUES TECHNIQUES

### Généralités

| | |
|---|---|
| Alimentation | : 14,4 V⎓ |
| Dimensions (larg.×haut.×prof.) | : 180×51×135 mm |

### Radio

| | |
|---|---|
| PO | : 520-1605 kHz |
| FM | : 87.5-108 MHz |
| FI-AM | : 468 kHz |
| FI-FM | : 10.7 MHz |
| Sensibilité à 26 dB rapport signal/bruit | : ⩽ 150 µV (PO)<br>⩽ 8 µV (FM) |
| Limite α –3 dB | : 30 µV |
| Diaphonie de 10 dB | : 150 µV |

### Cassette

| | |
|---|---|
| Nombre de pistes | : 2 × 2 |
| Vitesse de défilement | : 4,76 cm/sec |
| Pleurage et scintilement | : ⩽ 0,35% |
| Diaphonie | : ⩾ 40 dB |

### Amplificateur

| | |
|---|---|
| Puissance (D⩽10%) de sortie | : 2 × 5,0 W ± 1 dB/4 Ω<br>: 2 × 6,5 W ± 1 dB/2 Ω |
| Basses | : – 6 dB à 125 Hz |
| Aigus | : –14 dB à 10 kHz |

## (I) DATI TECNICI

### Generali

| | |
|---|---|
| Alimentazione | : 14,4 V⎓ |
| Dimensioni (wxhxd) | : 180×51×135 mm |

### Radio

| | |
|---|---|
| MW | : 520-1605 kHz |
| FM | : 87.5-108 MHz |
| IF-AM | : 468 kHz |
| IF-FM | : 10.7 MHz |
| Sensibilità per 26 dB S/R | : ⩽ 150 µV (MW)<br>⩽ 8 µV (FM) |
| Punto limite α –3 dB | : 30 µV |
| 10 dB di diafonia | : 150 µV |

### Riproduttore a cassetta

| | |
|---|---|
| Numero di tracce | : 2 × 2 |
| Velocità nastro | : 4,76 cm/sec |
| Wow e flutter | : ⩽ 0,35% |
| Diafonia | : ⩾ 40 dB |

### Amplificatore

| | |
|---|---|
| Potenza d'uscita (D⩽10%) | : 2 × 5,0 W ± 1 dB/4 Ω<br>: 2 × 6,5 W ± 1 dB/2 Ω |
| Bassi | : – 6 dB à 125 Hz |
| Alti | : –14 dB à 10 kHz |

## Specification checks

| Check | SK | | | | Setting of controls | | |
|---|---|---|---|---|---|---|---|
| α -3 dB | FM | 98 MHz : 1 mV<br>1 KHz, Δf = 22.5 KHz | A | | | 1 : 0 dB (≡ 775 mV) | |
| | | 98 MHz : 25 μV<br>1 KHz, Δf = 22.5 KHz | | | | 1 : 0 - 3 dB | |
| 26 dB S/N | FM | 98 MHz : 6 μV<br>1 KHz, Δf = 22.5 KHz | A | | | 1 : 2V ~ (≡ 0 dB) | |
| | | 98 MHz : 6 μV<br>without mod | | | | 1 : -26 dB | |
| | MW | 600 KHz : 120 μV<br>1 KHz, AM = 30% | B | | | 1 : 2V ~ (≡ 0 dB) | |
| | | 600 KHz : 120 μV<br>without mod | | | | 1 : -26 dB | |

## Adjustments

| Adjustment | SK | | | | | | |
|---|---|---|---|---|---|---|---|
| AM-IF | MW | 512 KHz<br>1 KHz, AM = 30% | B | max. L | 5014 | 1 max. ~ | |
| MW-RF | MW | 512 KHz<br>1 KHz, AM = 30% | B | max. L | 5013 | 1 max. ~ | |
| | | 1635 KHz<br>1 KHz, AM = 30% | | min. L | 5012 | | |
| | | 1500 KHz<br>1 KHz, AM = 30% | | | 2105<br>2101 | | |
| FM-IF | FM | 98 MHz wobbel<br>50 Hz, Δf = 300 KHz<br>A | A | | 5047<br>IFT * | | |
| | | | | | 5048 | 3 max. ~ | Symm. + Linear A |
| VCO stereo decoder | FM stereo | | | | 3402 | 2 19 KHz ± 150 Hz | |

Repeat

* in manual Tuner (Pos 416)

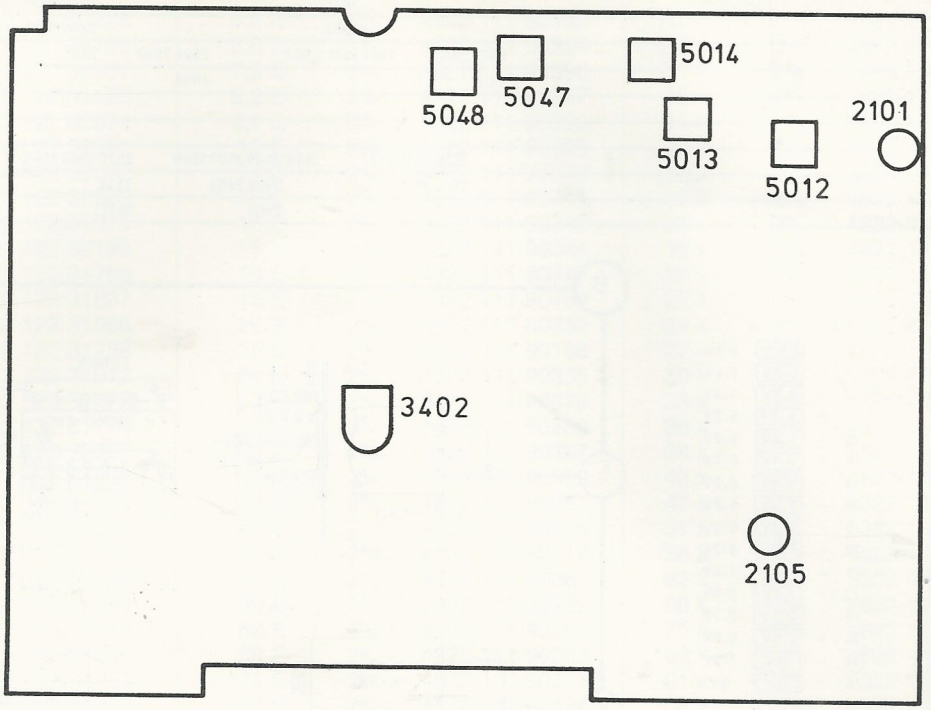


26476

| | |
|---|---|
| 401 | 4822 403 52655 |
| 402 | 4822 331 30032 |
| 403 | 4822 423 40835 |
| 404 | 4822 423 50808 |
| 406 | 4822 459 50391 |
| 407 | 4822 411 50558 |
| 408 | 4822 413 31374 |
| 409 | 4822 410 24805 |
| 411 | 4822 410 24804 |
| 412 | 4822 255 40528 |
| 413 | 4822 404 20519 |
| 414 | 4822 450 80979 |
| 416 | 4822 210 10258 |
| 417 | 4822 532 10912 |
| 418 | 4822 267 10178 |
| 419 | 4822 403 52656 |

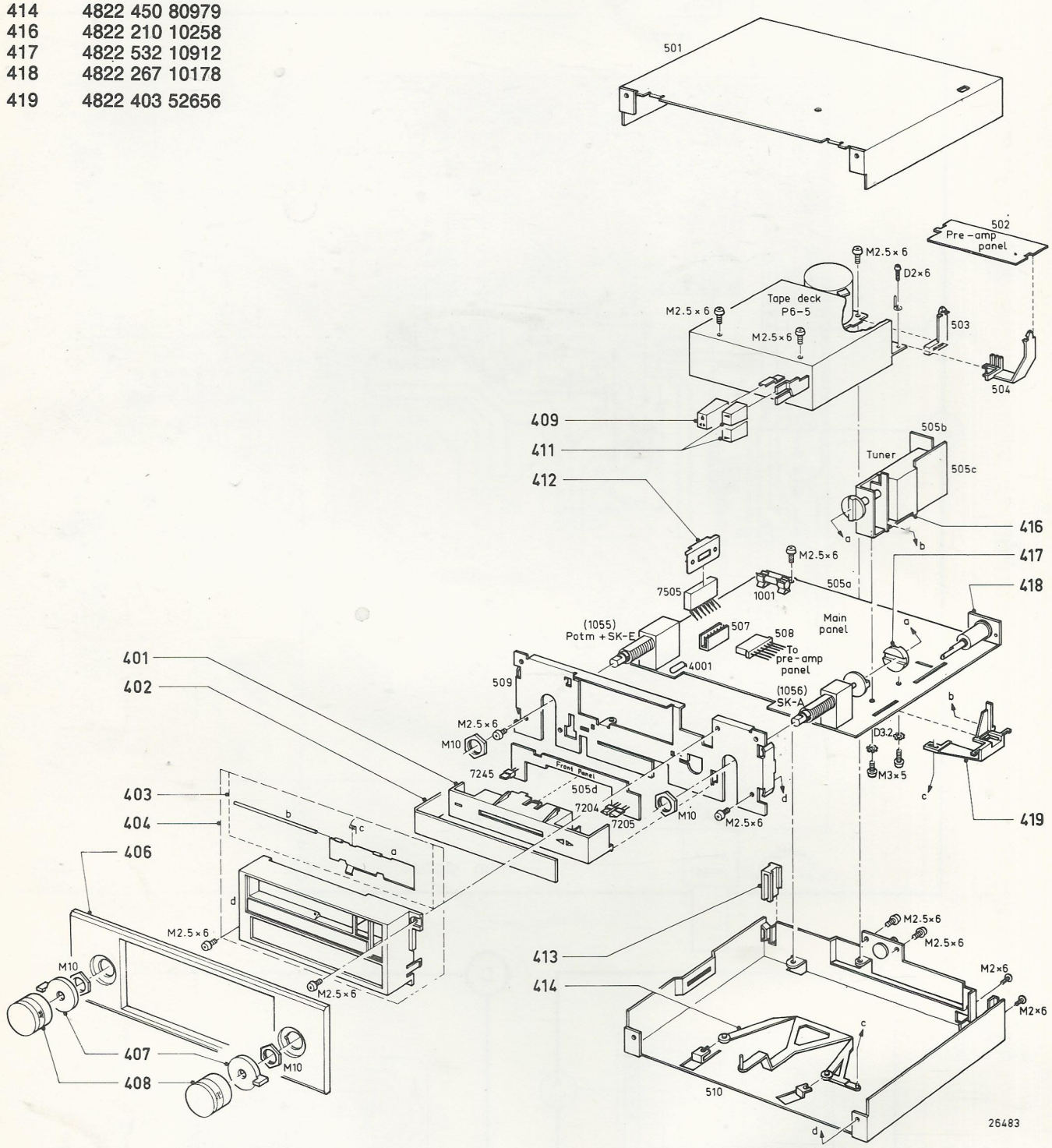

| | | | |
|---|---|---|---|
| Carbon film 0.2 W | 70°C | 5% | |
| Carbon film 0.33 W | 70°C | 5% | |
| Metal film 0.33 W | 70°C | 5% | |
| Carbon film 0.5 W | 70°C | 5% | |
| Carbon film 0.67 W | 70°C | 5% | |
| Carbon film 1.15 W | 70°C | 5% | |
| Metal film 0.5 W | 70°C | 5% | |

Ⓒ Chip component

| | | |
|---|---|---|
| Ceramic plate<br>Tuning ⩽ 120 pF NP.0<br>Others | 2%<br>—20/+80% | |
| Polyester flat foil | 10% | |
| Metalized polyester flat film | 10% | |
| Polyester flat foil small size (Mylar) | 10%, | |
| Polysterene film/foil | 1% | |
| Tubular ceramic | | |
| Miniature single | | |
| Subminiature tantalum | ± 20% | |

*a = 2,5 V
b = 4 V
c = 6,3 V
d = 10 V
e = 16 V
f = 25 V
g = 40 V
h = 63 V
j = 100 V
l = 125 V
m = 150 V
n = 160 V
q = 200 V
r = 250 V
s = 300 V
t = 350 V
u = 400 V
v = 500 V
w = 630 V
x = 1000 V
A = 1,6 V
B = 6 V
C = 12 V
D = 15 V
E = 20 V
F = 35 V
G = 50 V
H = 75 V
I = 80 V

26338

## HANDLING CHIP COMPONENTS

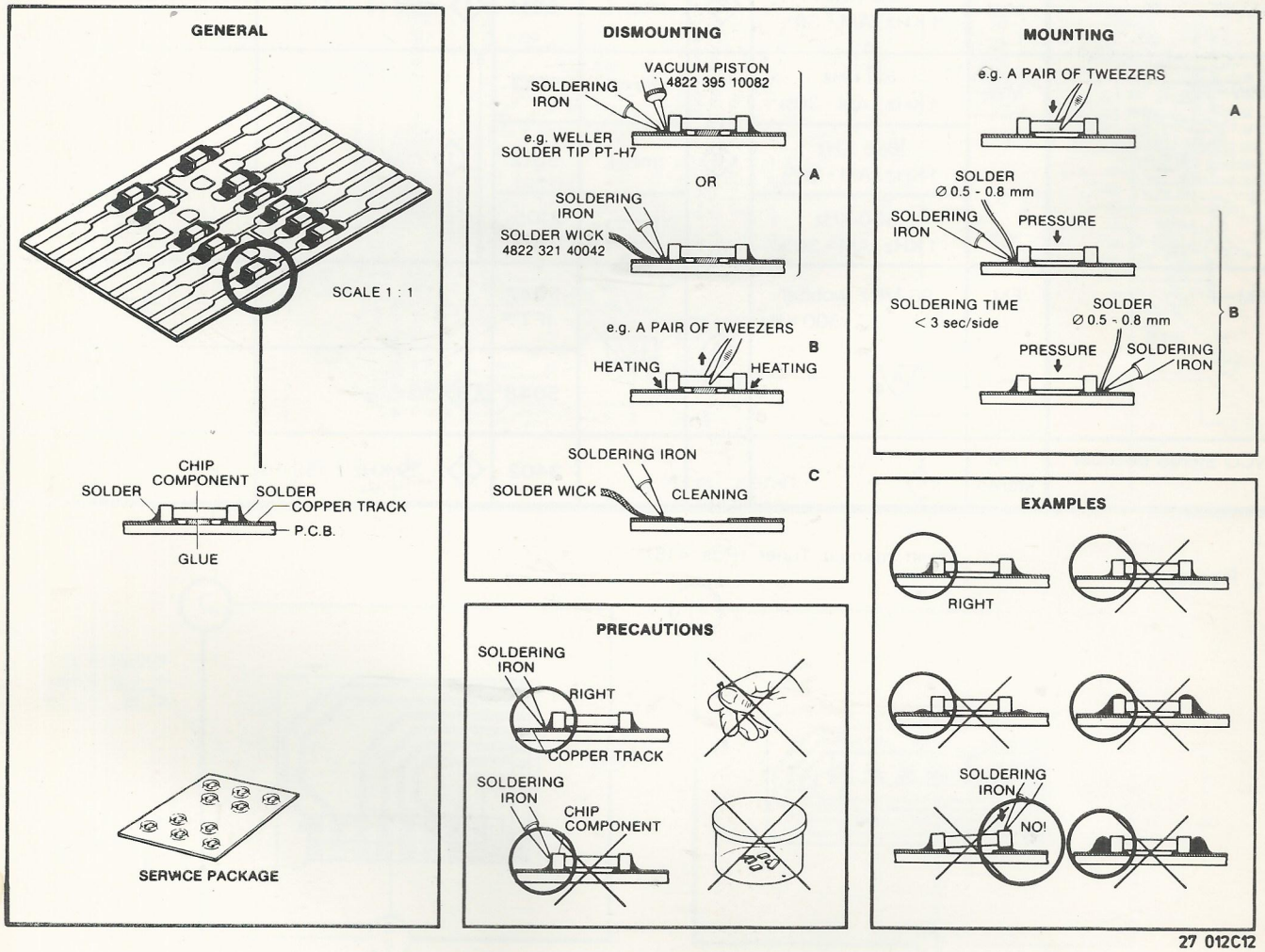


27 012C12

| | | |
|---|---|---|
| 2101 | Trimmer 120 pF | 4822 125 50227 |
| 2105 | Trimmer 20 pF | 4822 125 50201 |
| 2564 } 2565 } | Elco 1000 µF-10 V 20% | 4822 124 21694 |
| 2803 | Elco 2200 µF-16 V 20% | 4822 124 21681 |

| | | |
|---|---|---|
| 1055 | Potm. carb. 50 KB | 4822 101 50274 |
| 1056 | Potm. carb. 50 KA | 4822 101 30545 |
| 3402 | Potm. trimmer 10K | 4822 100 10035 |

| | | |
|---|---|---|
| 5011 | 4.7 µH | 4822 157 51235 |
| 5012 | AM-osc | 4822 156 70055 |
| 5013 | AM-osc | 4822 156 10601 |
| 5014 | IF-AM | 4822 156 20807 |
| 5047 | IF–FM | 4822 156 70057 |
| 5048 | IF-FM | 4822 156 70056 |
| 5120 | 220 µH | 4822 157 51799 |

| | |
|---|---|
| 1N4148 | 4822 130 30621 |
| 1N4001 | 4822 130 31438 |
| 2-1K261UE | 4822 130 32299 |
| BAV10 | 4822 130 30594 |
| BZX79C9V1 | 4822 130 30862 |
| GL9NG24 (GREEN) | 4822 130 32225 |
| LN328GP (GREEN) | 4822 130 32226 |

| | |
|---|---|
| 1702N | 4822 130 41729 |
| 1802 | 4822 130 44104 |
| BF494 | 4822 130 44195 |

| | |
|---|---|
| AN7410 | 4822 209 80683 |
| TA7705P | 4822 209 82116 |
| TDA1510 | 4822 209 81317 |
| TEA5570 | 4822 209 81563 |

**Miscellaneous**

| | | |
|---|---|---|
| 1001 | Fuse 2 A(T) | 4822 253 30025 |
| 1011 | Ceram filter 10.7 MHz | 4822 242 70249 |
| 1012 | Ceram filter 10.7 MHz | 4822 242 70249 |
| 1016 | Ceram filter 468 kHz | 4822 242 70763 |

| © Chips 50 V NP0 S1206 | | |
|---|---|---|
| 1 pF | 5% | 4822 122 32279 |
| 1,5 pF | 5% | 4822 122 31792 |
| 1,8 pF | 5% | 4822 122 32087 |
| 2,2 pF | 5% | 4822 122 32425 |
| 3,3 pF | 5% | 4822 122 32079 |
| 3,9 pF | 5% | 4822 122 32081 |
| 4,7 pF | 5% | 4822 122 32082 |
| 8,2 pF | 5% | 4822 122 32083 |
| 10 pF | 5% | 4822 122 31971 |
| 12 pF | 5% | 4822 122 32139 |
| 18 pF | 5% | 4822 122 31769 |
| 22 pF | 10% | 4822 122 31837 |
| 27 pF | 5% | 4822 122 31966 |
| 33 pF | 5% | 4822 122 31756 |
| 39 pF | 5% | 4822 122 31972 |
| 47 pF | 5% | 4822 122 31772 |
| 56 pF | 5% | 4822 122 31774 |
| 68 pF | 5% | 4822 122 32267 |
| 82 pF | 10% | 4822 122 31839 |
| 100 pF | 5% | 4822 122 31765 |
| 120 pF | 5% | 4822 122 31766 |
| 150 pF | 5% | 4822 122 31767 |
| 180 pF | 2% | 4822 122 31794 |
| 220 pF | 5% | 4822 122 31965 |
| 270 pF | 5% | 4822 122 32142 |
| 330 pF | 10% | 4822 122 31642 |
| 390 pF | 5% | 4822 122 31771 |
| 470 pF | 5% | 4822 122 31727 |
| 560 pF | 5% | 4822 122 31773 |
| 680 pF | 5% | 4822 122 31775 |
| 820 pF | 5% | 4822 122 31974 |
| 1 nF | 10% | 5322 122 31647 |
| 1,2 nF | 5% | 4822 122 31807 |
| 1,5 nF | 10% | 4822 122 31781 |
| 2,2 nF | 10% | 4822 122 31644 |
| 2,7 nF | 10% | 4822 122 31783 |
| 3,3 nF | 10% | 4822 122 31969 |
| 3,9 nF | 10% | 4822 122 32566 |
| 4,7 nF | 10% | 4822 122 31784 |
| 5,6 nF | 10% | 4822 122 31916 |
| 6,8 nF | 10% | 4822 122 31976 |
| 10 nF | 10% | 4822 122 31728 |
| 12 nF | 10% | 5322 122 31648 |
| 15 nF | 10% | 4822 122 31782 |
| 18 nF | 10% | 4822 122 31759 |
| 22 nF | 10% | 4822 122 31797 |
| 27 nF | 10% | 4822 122 32541 |
| 33 nF | 10% | 4822 122 31981 |
| 47 nF | 10% | 4822 122 32542 |
| 56 nF | 10% | 4822 122 32183 |
| 100 nF | 10% | 4822 122 31947 |

| © Chips 0,125 W S1206 | | |
|---|---|---|
| 0 E | jumper | 4822 111 90163 |
| 1 E | 5% | 4822 111 90184 |
| 1,1 E | 5% | 4822 111 90377 |
| 1,2 E | 5% | 4822 111 90378 |
| 1,3 E | 5% | 4822 111 90379 |
| 1,5 E | 5% | 4822 111 90381 |
| 1,6 E | 5% | 4822 111 90382 |
| 1,8 E | 5% | 4822 111 90383 |
| 2 E | 5% | 4822 111 90384 |
| 2,2 E | 5% | 5322 111 90104 |
| 2,4 E | 5% | 4822 111 90385 |
| 2,7 E | 5% | 4822 111 90386 |
| 3 E | 5% | 4822 111 90387 |
| 3,3 E | 5% | 4822 111 90338 |
| 3,6 E | 5% | 4822 111 90389 |
| 3,9 E | 5% | 4822 111 90391 |
| 4,3 E | 5% | 4822 111 90392 |
| 4,7 E | 5% | 5322 111 90376 |
| 5,1 E | 5% | 4822 111 90393 |
| 5,6 E | 5% | 4822 111 90394 |

| © Chips 0,125 W S1206 | | |
|---|---|---|
| 6,2 E | 5% | 4822 111 90395 |
| 6,8 E | 5% | 4822 111 90254 |
| 7,5 E | 5% | 4822 111 90396 |
| 8,2 E | 5% | 4822 111 90397 |
| 9,1 E | 5% | 4822 111 90398 |
| 10 E | 2% | 5322 111 90095 |
| 11 E | 2% | 4822 111 90338 |
| 12 E | 2% | 4822 111 90341 |
| 13 E | 2% | 4822 111 90343 |
| 15 E | 2% | 4822 111 90344 |
| 16 E | 2% | 4822 111 90347 |
| 18 E | 2% | 5322 111 90139 |
| 20 E | 2% | 4822 111 90352 |
| 22 E | 2% | 4822 111 90186 |
| 24 E | 2% | 4822 111 90355 |
| 27 E | 2% | 5322 111 90375 |
| 30 E | 2% | 4822 111 90356 |
| 33 E | 2% | 4822 111 90357 |
| 36 E | 2% | 4822 111 90359 |
| 39 E | 2% | 4822 111 90361 |
| 43 E | 2% | 5322 116 90125 |
| 47 E | 2% | 4822 111 90217 |
| 51 E | 2% | 4822 111 90365 |
| 56 E | 2% | 4822 111 90239 |
| 62 E | 2% | 4822 111 90367 |
| 68 E | 2% | 4822 111 90203 |
| 75 E | 2% | 4822 111 90371 |
| 82 E | 2% | 4822 111 90124 |
| 91 E | 2% | 4822 111 90375 |
| 100 E | 2% | 5322 111 90091 |
| 110 E | 2% | 4822 111 90335 |
| 120 E | 2% | 4822 111 90339 |
| 130 E | 2% | 4822 111 90164 |
| 150 E | 2% | 5322 111 90098 |
| 160 E | 2% | 4822 111 90345 |
| 180 E | 2% | 5322 111 90242 |
| 200 E | 2% | 4822 111 90348 |
| 220 E | 2% | 4822 111 90178 |
| 240 E | 2% | 4822 111 90353 |
| 270 E | 2% | 4822 111 90154 |
| 300 E | 2% | 4822 111 90156 |
| 330 E | 2% | 5322 111 90106 |
| 360 E | 1% | 4822 111 90288 |
| 360 E | 2% | 4822 111 90358 |
| 390 E | 2% | 5322 111 90138 |
| 430 E | 2% | 4822 111 90362 |
| 470 E | 2% | 5322 111 90109 |
| 510 E | 2% | 4822 111 90245 |
| 560 E | 2% | 5322 111 90113 |
| 620 E | 2% | 4822 111 90366 |
| 680 E | 2% | 4822 111 90162 |
| 750 E | 2% | 5322 111 90306 |
| 820 E | 2% | 4822 111 90171 |
| 910 E | 2% | 4822 111 90372 |
| 1 k | 2% | 5322 111 90092 |
| 1,1 k | 2% | 4822 111 90336 |
| 1,2 k | 2% | 5322 111 90096 |
| 1,3 k | 2% | 4822 111 90244 |
| 1,5 k | 2% | 4822 111 90151 |
| 1,6 k | 2% | 5322 111 90265 |
| 1,8 k | 2% | 5322 111 90101 |
| 2 k | 2% | 4822 111 90165 |
| 2,2 k | 2% | 4822 111 90248 |
| 2,4 k | 2% | 4822 111 90289 |
| 2,7 k | 2% | 4822 111 90569 |
| 3 k | 2% | 4822 111 90198 |
| 3,3 k | 2% | 4822 111 90157 |
| 3,6 k | 2% | 5322 111 90107 |
| 3,9 k | 2% | 4822 111 90571 |
| 4,3 k | 2% | 4822 111 90167 |
| 4,7 k | 2% | 5322 111 90111 |
| 5,1 k | 2% | 5322 111 90268 |
| 5,6 k | 2% | 4822 111 90572 |
| 6,2 k | 2% | 4822 111 90545 |
| 6,8 k | 2% | 4822 111 90544 |

| © Chips 0,125 W S1206 | | |
|---|---|---|
| 7,5 k | 2% | 4822 111 90276 |
| 8,2 k | 2% | 5322 111 90118 |
| 9,1 k | 2% | 4822 111 90373 |
| 10 k | 2% | 4822 111 90249 |
| 11 k | 2% | 4822 111 90337 |
| 12 k | 2% | 4822 111 90253 |
| 13 k | 2% | 4822 111 90509 |
| 15 k | 2% | 4822 111 90196 |
| 16 k | 2% | 4822 111 90346 |
| 18 k | 2% | 4822 111 90238 |
| 20 k | 2% | 4822 111 90349 |
| 22 k | 2% | 4822 111 90251 |
| 24 k | 2% | 4822 111 90512 |
| 27 k | 2% | 4822 111 90542 |
| 30 k | 2% | 4822 111 90216 |
| 33 k | 2% | 5322 111 90267 |
| 36 k | 2% | 4822 111 90514 |
| 39 k | 2% | 5322 111 90108 |
| 43 k | 2% | 4822 111 90363 |
| 47 k | 2% | 4822 111 90543 |
| 51 k | 2% | 5322 111 90274 |
| 56 k | 2% | 4822 111 90573 |
| 62 k | 2% | 5322 111 90275 |
| 68 k | 2% | 4822 111 90202 |
| 75 k | 2% | 4822 111 90574 |
| 82 k | 2% | 4822 111 90575 |
| 91 k | 2% | 5322 111 90277 |
| 100 k | 2% | 4822 111 90214 |
| 110 k | 2% | 5322 111 90269 |
| 120 k | 2% | 4822 111 90568 |
| 130 k | 2% | 4822 111 90511 |
| 150 k | 2% | 5322 111 90099 |
| 160 k | 2% | 5322 111 90264 |
| 180 k | 2% | 4822 111 90565 |
| 200 k | 2% | 4822 111 90351 |
| 220 k | 2% | 4822 111 90197 |
| 240 k | 2% | 4822 111 90215 |
| 270 k | 2% | 4822 111 90302 |
| 300 k | 2% | 5322 111 90266 |
| 330 k | 2% | 4822 111 90513 |
| 360 k | 2% | 4822 111 90515 |
| 390 k | 2% | 4822 111 90182 |
| 430 k | 2% | 4822 111 90168 |
| 470 k | 2% | 4822 111 90161 |
| 510 k | 2% | 4822 111 90364 |
| 560 k | 2% | 4822 111 90169 |
| 620 k | 2% | 4822 111 90213 |
| 680 k | 2% | 4822 111 90368 |
| 750 k | 2% | 4822 111 90369 |
| 820 k | 2% | 4822 111 90205 |
| 910 k | 2% | 4822 111 90374 |
| 1 M | 2% | 4822 111 90252 |
| 1,1 M | 5% | 4822 111 90408 |
| 1,2 M | 5% | 4822 111 90409 |
| 1,3 M | 5% | 4822 111 90411 |
| 1,5 M | 5% | 4822 111 90412 |
| 1,6 M | 5% | 4822 111 90413 |
| 1,8 M | 5% | 4822 111 90414 |
| 2 M | 5% | 4822 111 90415 |
| 2,2 M | 5% | 4822 111 90185 |
| 2,4 M | 5% | 4822 111 90416 |
| 2,7 M | 5% | 4822 111 90417 |
| 3 M | 5% | 4822 111 90418 |
| 3,3 M | 5% | 4822 111 90191 |
| 3,6 M | 5% | 4822 111 90419 |
| 3,9 M | 5% | 4822 111 90421 |
| 4,3 M | 5% | 4822 111 90422 |
| 4,7 M | 5% | 4822 111 90423 |
| 5,1 M | 5% | 4822 111 90424 |
| 5,6 M | 5% | 4822 111 90425 |
| 6,2 M | 5% | 4822 111 90426 |
| 6,8 M | 5% | 4822 111 90235 |
| 7,5 M | 5% | 4822 111 90427 |
| 8,2 M | 5% | 4822 111 90237 |
| 9,1 M | 5% | 4822 111 90428 |

| | | |

| | | |

| | | |