[ALSO ASTOR CR700]

# Cassette Auto Radio 90AC648/00/38

Service
Service
Service

SWITCH POT: 4822.102.20089
(May have new P/NO: 4822.101.20743)?

AC648/AC658/ U/W RETURN TO PHILIPS, NOBLE PARK, ATT. SHARON, FOR CHANGE-OVER.

**For Service Information regarding the cassette deck reference is made to Service Manual "Auto Cassette Deck TN303".**

# Service Manual

12 V

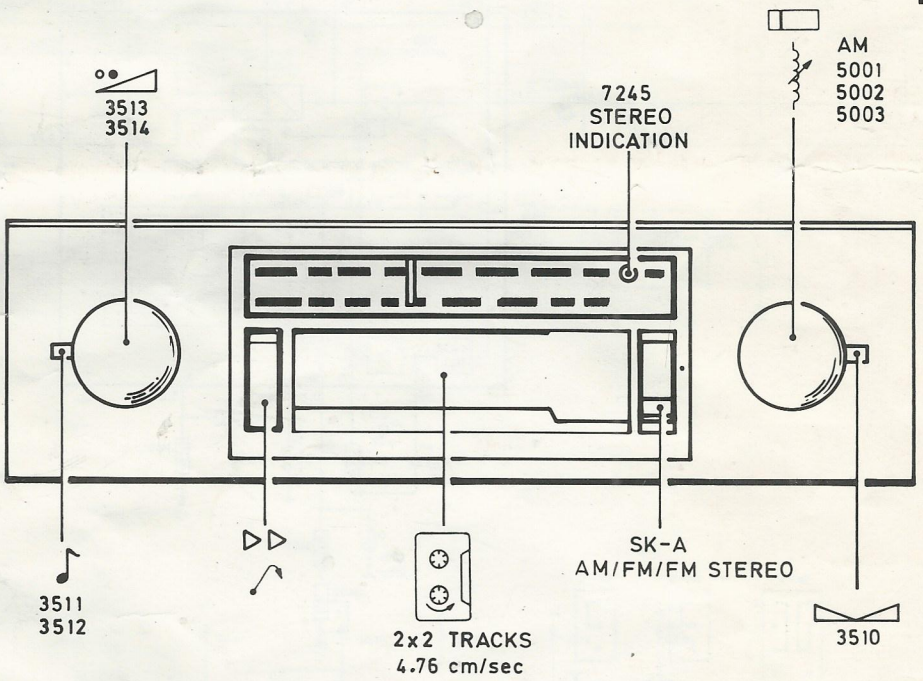


AM : 520 - 1605 KHz
FM : 87.5 - 108 MHz
AM IF : 455 KHz
FM IF : 10.7 MHz

(14.4V) 2x5.6W (d≤10%)

160 x 120 x 44 mm

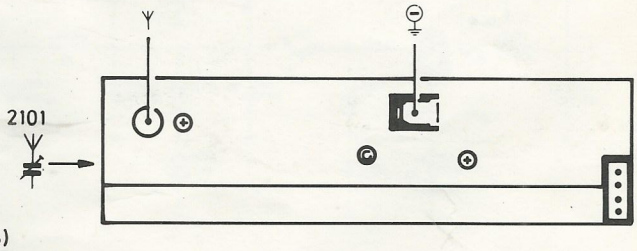


red - +14.4V
blk - -Ve
grey - right speaker
grn - left speaker

26348

Documentation Technique Service Dokumentation Documentazione di Servizio Huolte-Ohje Manual de Servicio Manual de Serviço

Subject to modification
4822 725 20111
Printed in The Netherlands

PHILIPS

## Specification checks

| Check | SK | | | | Setting of controls | | |
|---|---|---|---|---|---|---|---|
| α -3 dB | FM | 98 MHz : 1 mV<br>1 KHz, Δf = 22.5 KHz | A | | | 1 : 0 dB (≡ 775 mV) | |
| | | 98 MHz : 10 μV<br>1 KHz, Δf = 22.5 KHz | | | | 1 : 0 – 3 dB | |
| Crosstalk | FM stereo | 98 MHz : 1 mV<br>stereo signal | A | | + | 1 R : 0 dB<br>1 L : 0 dB | |
| | | 98 MHz : 1 mV<br>stereo – R | | | | 1 L – 1 R : ≥18 dB | |
| 26 dB S/N | FM | 98 MHz : 6 μV<br>1 KHz, Δf = 22.5 KHz | A | | | 1 : 2V ~ (≡ 0 dB) | |
| | | 98 MHz : 6 μV<br>without mod | | | | 1 : –26 dB | |
| | MW | 600 KHz : 120 μV<br>1 KHz, AM = 30% | B | | | 1 : 2V ~ | |
| | | 600 KHz : 120 μV<br>without mod | | | | 1 : –26 dB | |

## Adjustments

| Adjustment | SK | | | | | | |
|---|---|---|---|---|---|---|---|
| AM–IF | MW | 512 KHz<br>1 KHz, AM = 30% | B | max. L | 5014 | 1 max. ~ | |
| MW – RF | MW | 512 KHz<br>1 KHz, AM = 30% | B | max. L | 5013 | 1 max. ~ | |
| | | 1635 KHz<br>1 KHz, AM = 30% | | min. L | 5012 | | |
| | | 1500 KHz<br>1 KHz, AM = 30% | | | 2105<br>2101 | | |
| FM–IF | FM | 98 MHz wobbel<br>50 Hz, Δf = 300 KHz<br>A○ B● | A | | 5047<br>IFT | | 2 Symmetrical max fo A● |
| | | | | | 5048 | | 3 Symm. + Linear B○ |
| VCO stereo decoder | FM stereo | | | | 3402 | 4 19 KHz ± 150 Hz | |

↕ Repeat

| | | | | | | | | | | | | | | | | | | | | | | | | | | | | | |
|---|---|---|---|---|---|---|---|---|---|---|---|---|---|---|---|---|---|---|---|---|---|---|---|---|---|---|---|---|---|
| 2501 | J8 | 2506 | E9 | 2603 | H12 | 2606 | H16 | 2609 | C17 | 2612 | I17 | 2703 | D5 | 2706 | I6 | 2709 | J2 | 3501 | J7 | 3504 | F9 | 3512 | E9 | 3601 | H16 | 3604 | D16 | 3701 | E5 | 3704 | I5 | 3707 | D2 | 7184 | F14 |
| 2502 | F8 | 2601 | I11 | 2604 | D12 | 2607 | D16 | 2610 | D17 | 2701 | F3 | 2704 | E6 | 2707 | D3 | 3409 | K7 | 3502 | F7 | 3510 | H9 | 3513 | H10 | 3602 | G16 | 3605 | C16 | 3702 | F5 | 3705 | J5 | 3708 | E7 | 7185 | H4 |
| 2503 | J9 | 2602 | D11 | 2605 | C14 | 2608 | G17 | 2611 | I13 | 2702 | J3 | 2705 | H5 | 2708 | F2 | 3410 | B7 | 3503 | J9 | 3511 | I9 | 3514 | D10 | 3603 | H17 | 3606 | D17 | 3703 | F6 | 3706 | J6 | 3709 | I7 | 7246 | C4 |

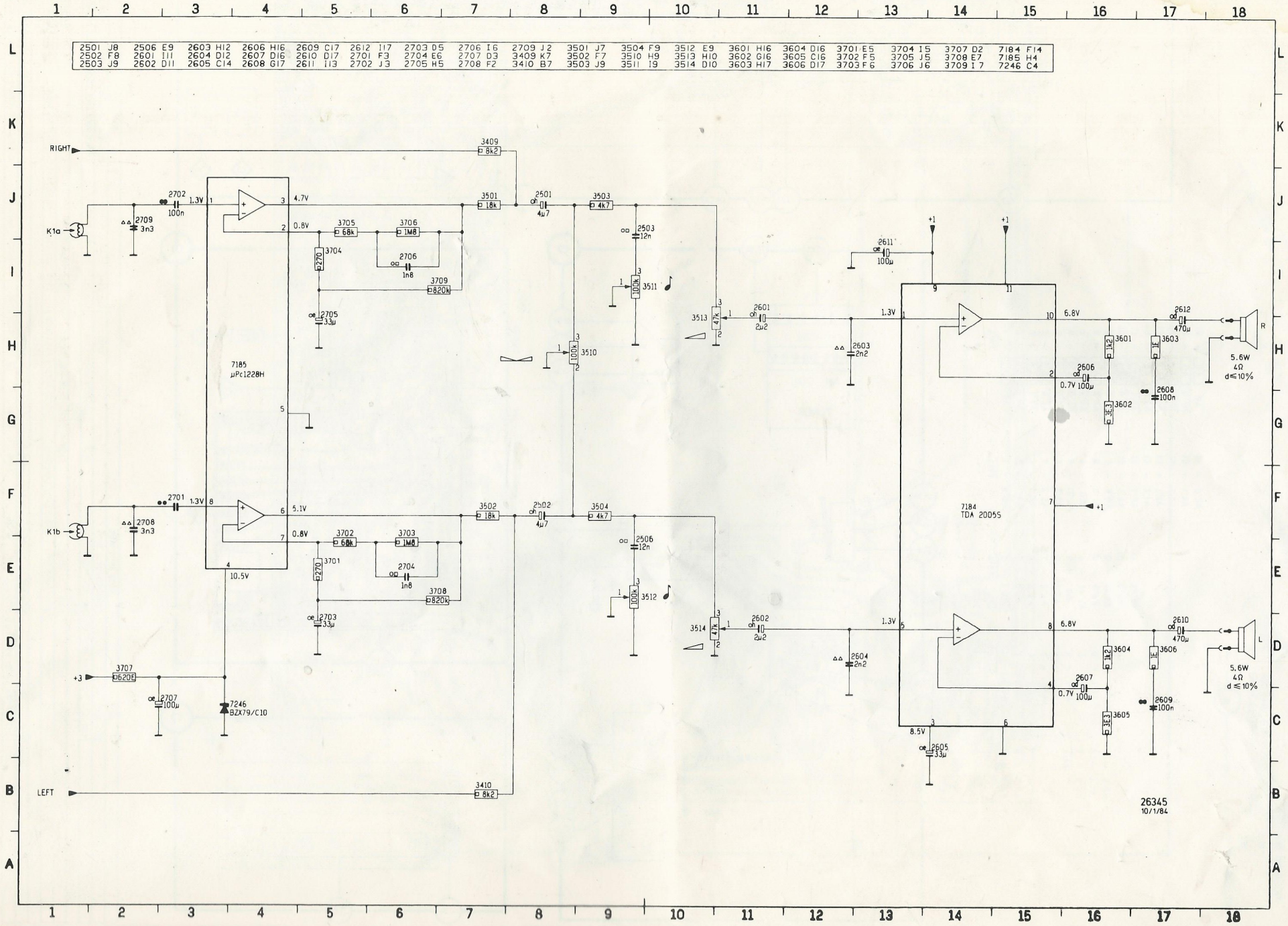


CS 94 106

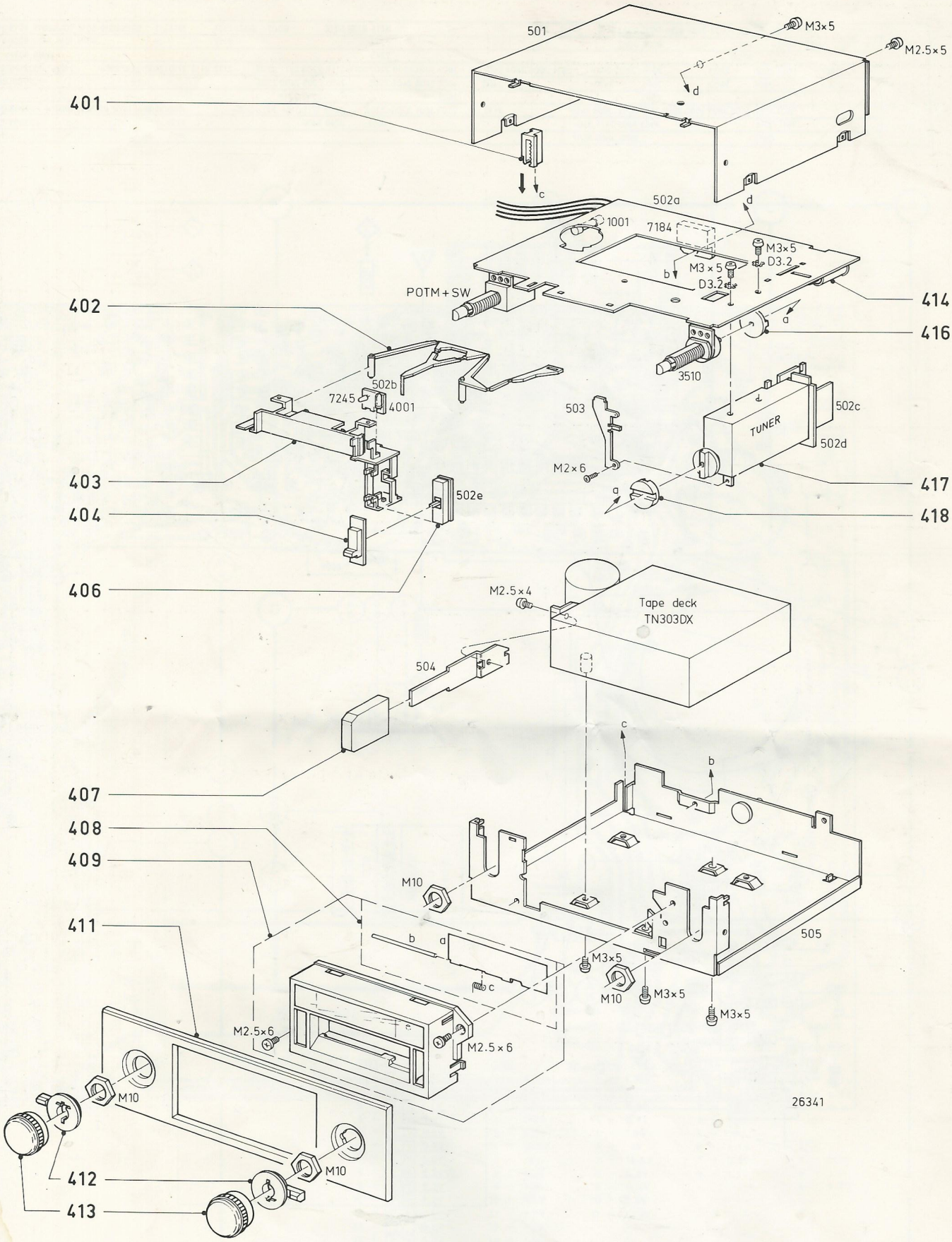


| | | | | | | | | | | | |
|---|---|---|---|---|---|---|---|---|---|---|---|
| 401 | 4822 | 404 | 20519 | 407 | 4822 | 410 | 23372 | 413 | 4822 | 413 | 10216 |
| 402 | 4822 | 450 | 80895 | 408 | 4822 | 423 | 50759 | 414 | 4822 | 266 | 20103 |
| 403 | 4822 | 404 | 20518 | 409 | 4822 | 423 | 50761 | 416 | 4822 | 528 | 20379 |
| 404 | 4822 | 410 | 23373 | 411 | 4822 | 454 | 11152 | 417 | 4822 | 736 | 12365 |
| 406 | 4822 | 277 | 20905 | 412 | 4822 | 411 | 50551 | 418 | 4822 | 532 | 10912 |

| | | |
|---|---|---|
| 3001 | VDR | 4822 116 20073 |
| 3402 | Preset 10K | 4822 100 10035 |
| 3510 | Potm 100KB | 4822 101 20743 |
| 3511 | Potm + SW | 4822 102 20089 |

| | | |
|---|---|---|
| 7121 | BC548C | 4822 130 44196 |
| 7122 | BF494B | 4822 130 41376 |
| 7181 | TEA5570 | 4822 209 81563 |
| 7183 | AN7410N | 4822 209 80683 |
| 7184 | TDA2005S | 4822 209 81887 |
| 7185 | µPc1228H | 4822 209 81928 |

-Miscellaneous-

| | | |
|---|---|---|
| 1001 | Fuse T2A | 4822 253 30025 |
| 1011,1012 | Filter 10.7MHz | 4822 242 70249 |
| 1016 | Filter 455KHz | 4822 242 70754 |
| 4001 | Lamp 14V 50mA | 4822 134 40509 |

| | | |
|---|---|---|
| 2101 | Trimmer 120P | 4822 125 50225 |
| 2105 | Trimmer 40P | 4822 125 50092 |

| | | |
|---|---|---|
| 7241 | 1N4001 | 4822 130 31438 |
| 7242 | BZX79/C9V1 | 4822 130 30862 |
| 7243,7244 | 1N60P | 4822 130 30312 |
| 7245 | LED CQY95A grn | 4822 130 30923 |
| 7246 | Zener 10V | 4822 130 34297 |

| | | |
|---|---|---|
| 5011 | Fe ind 4.7µH | 4822 156 20736 |
| 5012 | MW Osc coil blk | 4822 156 70055 |
| 5013 | MW Osc coil red | 4822 156 10601 |
| 5014 | IFT AM blk | 4822 157 51801 |
| 5047 | IFT FM pink | 4822 156 70057 |
| 5048 | IFT FM blue | 4822 156 70056 |
| 5120 | Coil 220µH | 4822 157 51799 |

| | | | |
|---|---|---|---|
| Carbon film 0.2 W | 70°C | 5% | |
| Carbon film 0.33 W | 70°C | 5% | |
| Metal film 0.33 W | 70°C | 5% | |
| Carbon film 0.5 W | 70°C | 5% | |
| Carbon film 0.67 W | 70°C | 5% | |
| Carbon film 1.15 W | 70°C | 5% | |

Ⓒ Chip component

| | | |
|---|---|---|
| Ceramic plate<br>Tuning ≤ 120 pF NP.0<br>Others | | 2%<br>—20/+80% |
| Polyester flat foil | | 10% |
| Metalized polyester flat film | | 10% |
| Polyester flat foil small size (Mylar) | | 10% |
| Polysterene film/foil | | 1% |
| Tubular ceramic | | |
| Miniature single | | |
| Subminiature tantalum | | ± 20% |

*a = 2,5 V
b = 4 V
c = 6,3 V
d = 10 V
e = 16 V
f = 25 V
g = 40 V
h = 63 V
j = 100 V
l = 125 V
m = 150 V
n = 160 V
q = 200 V
r = 250 V
s = 300 V
t = 350 V
u = 400 V
v = 500 V
w = 630 V
x = 1000 V
A = 1,6 V
B = 6 V
C = 12 V
D = 15 V
E = 20 V
F = 35 V
G = 50 V
H = 75 V
I = 80 V

26338

| | | |

| | | |