SANYO

6-transistor Pocketable Radio

MODEL 6C-336 / MODEL 6C-338

SERVICE MANUAL

SANYO ELECTRIC CO., LTD.

INTERNATIONAL DIVISION : SANYO ELECTRIC TRADING CO., LTD.
OSAKA, JAPAN

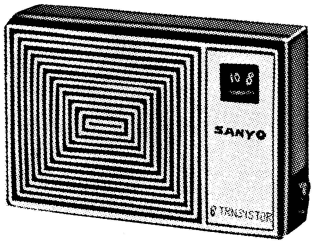

MODEL 6C-336

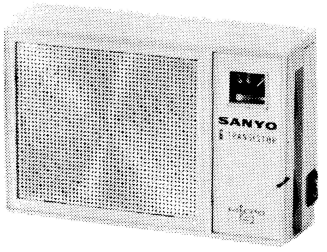

MODEL 6C-338

SPECIFICATIONS

FREQUENCY RANGE ..... 530 - 1,605 KC

INTERMEDIATE FREQUENCY ..... 455 KC

TRANSISTOR COMPLEMENTS

	2SA323	Frequency converter
	2SA203 ×2	IF amplifier
	2SB186	AF amplifier
	2SB22 ×2	Power amplifier

DIODE ..... IN60 or 1S188 Detector & AGC

RADIATION SENSITIVITY

10 mW output 460 μV/m (upper limit)

DISTORTION ..... 50 mW output at 5 mV/m input 13%
(upper limit)

SIGNAL-TO-NOISE RATIO

5mW output at 2mV/m input 21 dB
(lower limit)

LOUDSPEAKER ..... 2″ permanent dynamic speaker
Voice coil impedance 8 ohms

OUTPUT POWER ..... Undistorted 70 mW
Maximum 120 mW

BATTERY ..... Operates on 2 penlight batteries

CURRENT DRAIN ..... No signal 12 mA
Maximum 70 mA

DIMENSIONS ..... 3⅝″ wide × 2¼″ high × 1⅜″ thick

WEIGHT ..... 0.38 lbs (Incl. battery)

ALIGNMENT PROCEDURES

IF & RF alignment

Apply volt-meter across the voice coil

Volume control should be at maximum position.

Output of signal generator should be no higher than necessary to obtain proper reading in order to avoid AGC function.

STEP	SIGNAL GENERATOR COUPLING	SIGNAL GENERATOR FREQUENCY	RADIO DIAL SETTING	ADJUST FOR MAX. OUTPUT
IF ALIGNMENT				
1	Radiate signal through the loop antenna, which connected with signal generator output cable.	455 Kc	lower end	IFT 3 IFT 2 IFT 1
BROADCAST RF ALIGNMENT				
2	Radiate signal through the loop antenna, which connected with signal generator output cable.	520 Kc	lower end	L-2
3		1650 Kc	upper end	OSC Trim Ct 2
4		Repeat steps 2 and 3		
5		600 Kc	600 Kc	L-1
6		1400 Kc	1400 Kc	ANT Trim Ct 1
7		Repeat steps 5 and 6		

PARTS LIST

Symbol No.	Sanyo stock No.	Description	Q'ty
Electrical			
L-2	R-W8535a	OSC coil	1
T-1	R-W5T531	IF trans	1
T-2 A	R-W5T532	〃	1
T-3	R-W5T533	〃	1
T-1 A or B	R-W5516	〃	1
T-2 B	R-W5517	〃	1
T-3	R-W5518	〃	1
	R-R110503	Variable resistor	1
T-4	R-W6569	Input trans	1
	R-S6566	Speaker	1
	R-C-CX-003	Packed capacitor and resistor	1
CV-1 CV-2	R-C1503	Variable capacitors	1
〃		or R-C1031	1
〃		or R-C1509	1
	R-S6560 (S6536)	Earphone	1
C-11	R-C9547	Electrolytic (100μF/3V)	1
C-10 C-3	R-C9548	〃 (50μF/3V)	2
C-8	R-C9527	〃 (5μF/6V)	1
〃		or R-C9532	1
L-1	R-W2551	Ant coil	1
	R-S85153 (S85145)	Battery case	1
	R-S2509	Earphone socket	1
Tr-1	2SA323	Transistor	1
Tr-2 Tr-3	2SA203	〃 AA	2
Tr-4	2SB186	〃 A	1
Tr-5 Tr-6	2SB22	〃	2
	IN60 or IS188	Diode	1
Chassis & package			
	R-325031	Tuning knob	1
	R-325032	VR. knob	1
	R-12011	Lug	1
	R-475331 (R-475322)	Instruction sheet	1
	R-485036	Leather case	1
	R-485055	Earphone case	1
	(R-235046)	Bracket for PC. board	1
Cabinet			
	R-315096 (R-315142)	Cabinet	1
	R-315062	Back cover	1
	R-325033	Lens	1
	R-265269 (R-265136)	Name Plate	1
	R-475330 (R-475321)	Specification sheet	1
	R-415100	Battery cushion	1
	R-435044	Net	1
	R-25068	Speaker retaining clip	1
	R-245208	Stud nut	1
	R-	Protector	1
Screw, nut & washer			
	R-	Hexagon screw (2×4)	1
	R-	Tapping screw (2.3×5)	2
	R-	Tapping screw (3×5)	1
	R-	Screw (2×8)	1
	R-	Tapping screw (2.3×5)	1
	R-	Washer (2.2×5×0.3t)	1
	R-	Screw (2.6×3)	2
	R-	〃 (1.7×4)	1
	R-	〃 (2.6×3)	1
	R-	〃 (2×6)	1
Capasitors & resistors			
R-1	5.6 Kohms ±10% ¼W Carbon film		1
R-2	18 Kohms 〃 〃 or carbon		1
R-3	2.2 Kohms 〃 〃 composition		1
R-5	47 Kohms 〃 〃 fixed resistor		1
R-6	560 ohms 〃 〃		1
R-7	200 ohms ±20% 〃		1
R-8	10 Kohms ±10% 〃		1
R-9	68 Kohms 〃 〃		1
R-10	33 ohms 〃 〃		1
R-11 R-13	120 ohms 〃 〃		2
R-12 R-14	820 ohms 〃 〃		2
R-15	47 ohms 〃 〃		1
R-16	150 ohms 〃 ⅛−¼		1
R-4	270 Kohms 〃 〃		1
C-1 C-2	0.01 μF ±20% 90WV Mylar		2
C-7	0.02 μF 〃 〃		1
C-9 C-12	0.0075 μF 〃 〃		2
C-4	0.04 μF +80% −20% 〃 Ceramic		1
C-6	10 pF ±10% 〃 〃		1
C-5	16 pF 〃 〃		1

( )……in case of 6C-338

6-20020 Printed in Japan

MAIN PARTS CONNECTION

Antenna coil (L-1)

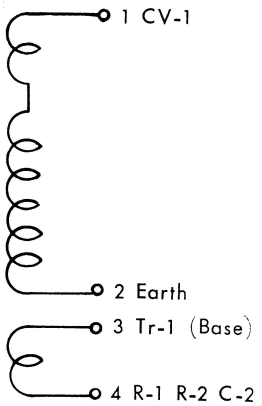

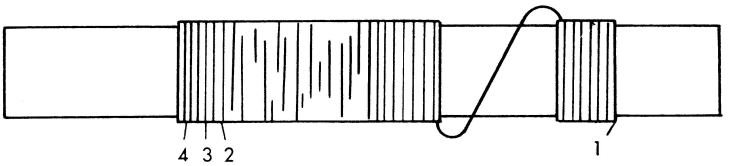

Input trans.

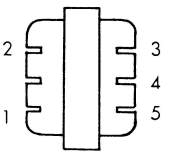

OSC coil (L-2)

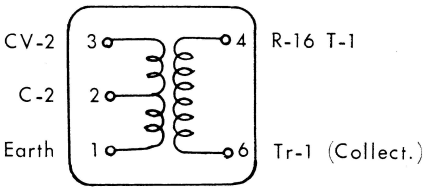

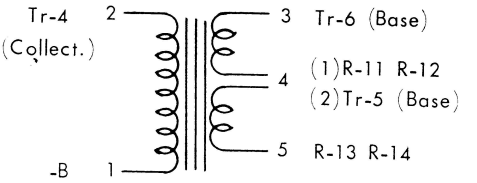

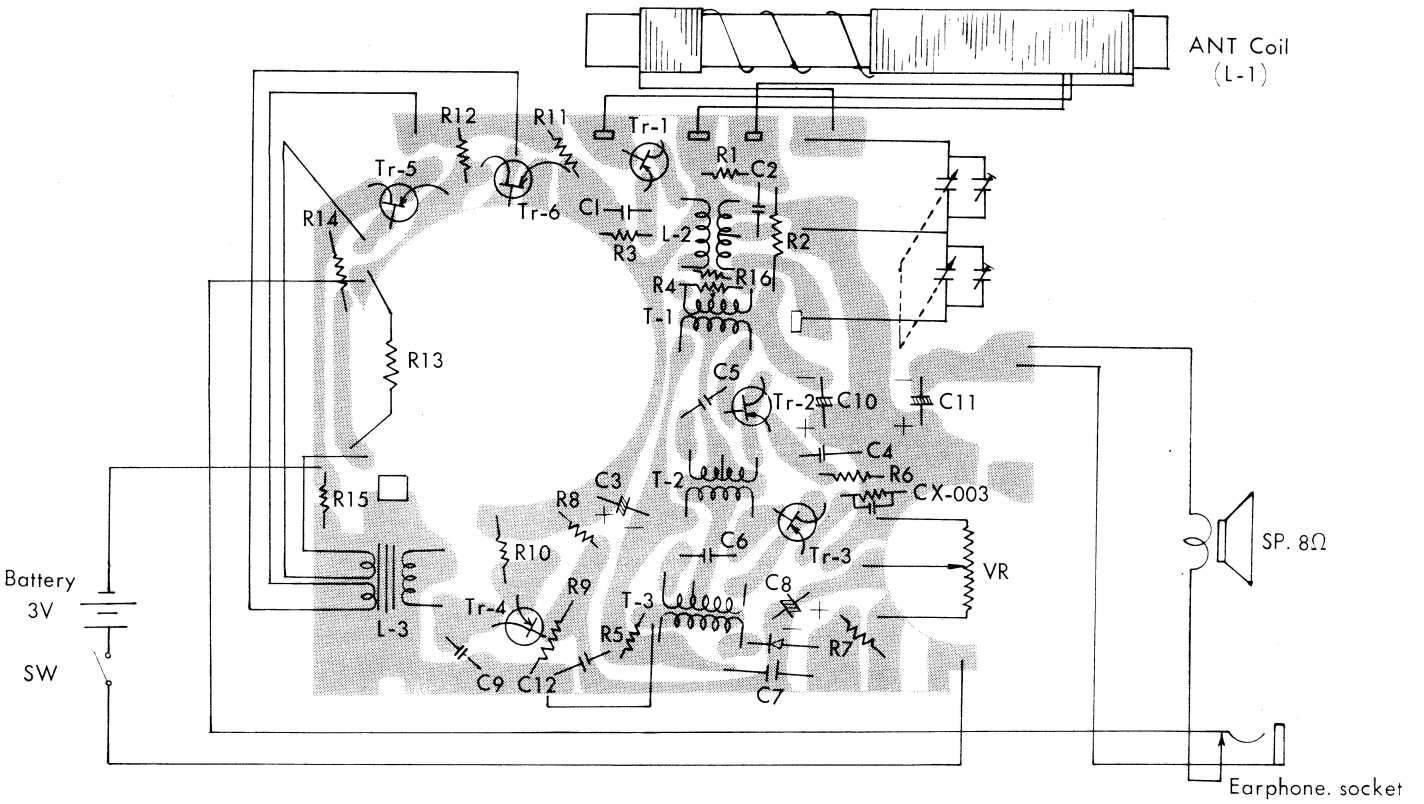

CIRCUIT DIAGRAM

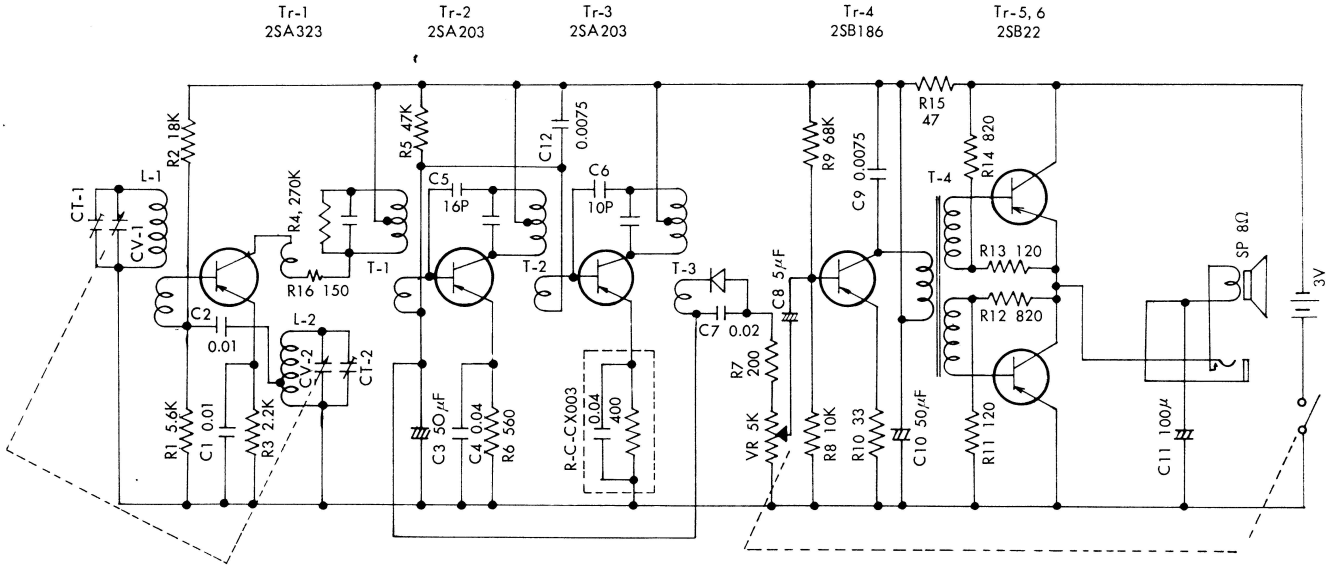
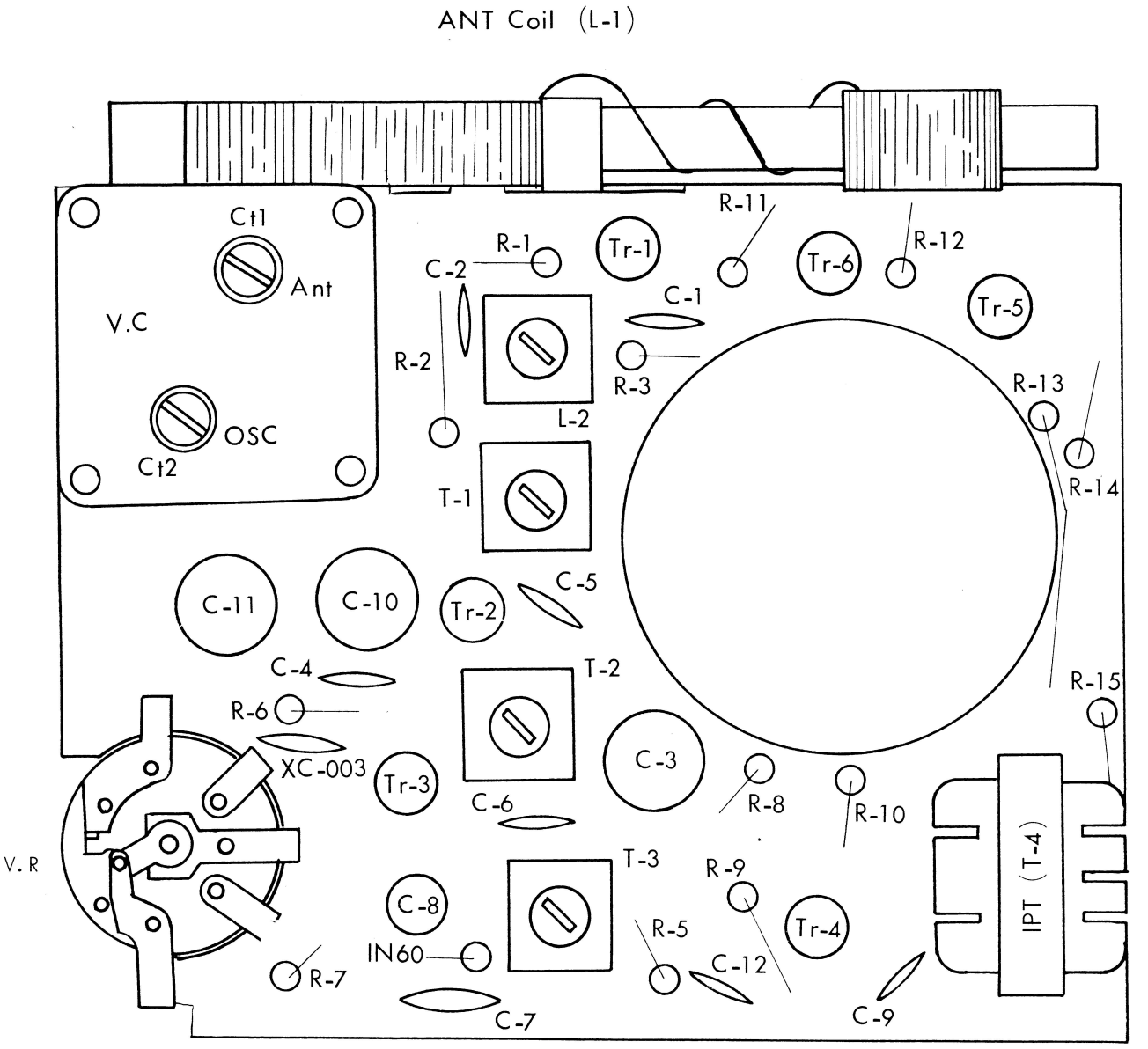
MAIN PARTS LOCATIONS