RADIO SERVICE BULLETIN

Issue No. 27
Date of issue: October, 1947
Subject: Model 256

SPECIFICATION OF S.T.C. MODEL 256

CIRCUIT. Five valve, dual wave A.C. or D.C. operated superheterodyne, using converter, one stage of I.F. amplification, detector-audio stage, Power output stage, and H.T. Rectifier.
A.V.C., inverse feedback, variable tone control.

TUNING RANGE.
Broadcast 540 — 1620 Kc/s.
Short Wave 5.9 — 18.2 Mc/s.

INTERMEDIATE FREQUENCY. 455 Kc/s.

VALVE COMPLEMENT.
V1 Frequency Changer 6K8GT.
V2 I.F. amplifier 6U7G.
V3 Detector-audio 6B8G.
V4 Power output 25A6G.
V5 H.T. rectifier 25Z4G.
Baretter 302.

POWER SUPPLY: 200-240 volts AC or DC.

LOUD SPEAKER.
Permag. 6", 8", or 12" cone, 5000 ohm transformer.

CIRCUIT VOLTAGES.

	Plate	Screen	Osc. Plate	Cathode	Heater
V1	240	100	100	3	6.3
V2	240	100	—	3	6.3
V3	80	20	—	1	6.3
V4	130	140	—	18	25
V5	235/235	—	—	250	25

These voltages must be measured to receiver earth with a voltmeter having a resistance of at least 1000 ohms per volt. (Tolerance ± 5%) Volume control must be turned to maximum.

MEASUREMENT SPECIFICATIONS.
I.F.'s from V1 grid — 40 microvolts.
I.F.'s from V2 grid — 3 millivolts.
Broadcast — 10 microvolts average.
Short Wave — 35 microvolts average.
These figures are related to an audio frequency output of 14 volts measured between plate of V4 and earth, through a series condenser of .1 MFD capacity.

ALIGNMENT FREQUENCIES.
Broadcast 1400 Kc/s and 600 Kc/s.
Short Wave 16 Mc/s and 6 Mc/s.

CHECK POINT.
Broadcast 1000 Kc/s.
Short Wave 10 Mc/s.

MODEL 256

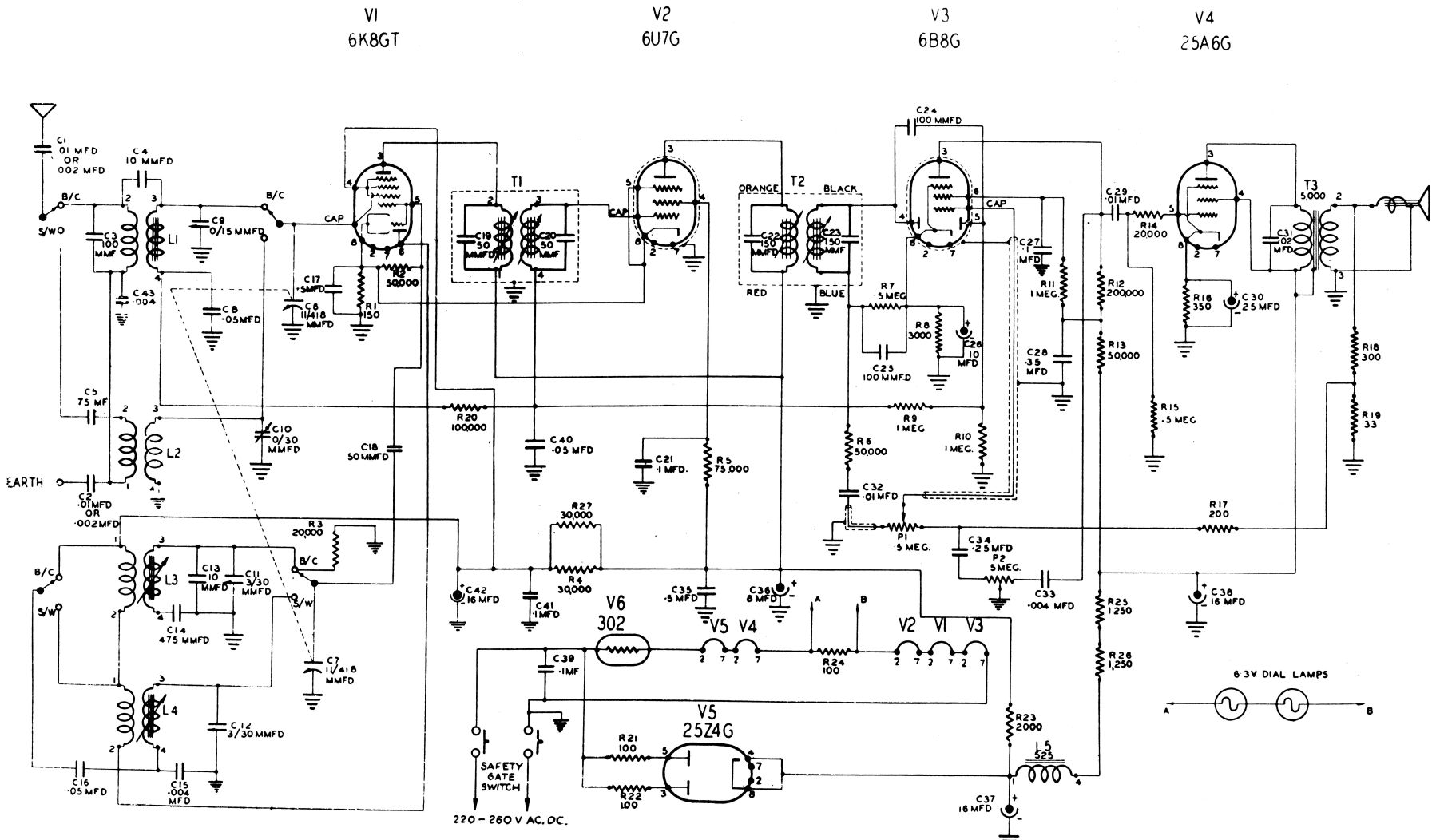
V1
6K8GT
V2
6U7G
V3
6B8G
V4
25A6G
V5
25Z4G
V6
302
T1
T2
T3
ORANGE
BLACK
RED
BLUE
CAP
B/C
S/W
EARTH
C1 ·01 MFD OR ·002 MFD
C4 10 MMFD
C3 100 MMF
L1
L2
L3
L4
C5 75 MF
C2 ·01MFD OR ·002MFD
C9 0/15 MMFD
C8 ·05MFD
C43 ·004
C17 ·5MFD
C6 11/418 MMFD
R1 150
R2 50,000
C10 0/30 MMFD
C18 50 MMFD
R3 20,000
C13 10 MMFD
C11 3/30 MMFD
C14 475 MMFD
C7 11/418 MMFD
C12 3/30 MMFD
C16 ·05 MFD
C15 ·004 MFD
R20 100,000
C19 50 MMFD
C20 50 MMFD
C40 ·05 MFD
C21 1 MFD.
R5 75,000
C22 150 MMFD
C23 150 MMF
R27 30,000
R4 30,000
C42 16 MFD
C41 ·1MFD
C35 ·5 MFD
C36 8 MFD
C39 ·1MF
R21 100
R22 100
SAFETY GATE SWITCH
220 – 260 V AC. DC.
R24 100
A
B
C24 100 MMFD
R7 ·5 MEG
R8 3000
C26 10 MFD
C25 100 MMFD
R6 50,000
C32 ·01 MFD
R9 1 MEG
R10 1 MEG.
P1 ·5 MEG.
C34 ·25 MFD
P2 5 MEG.
C33 ·004 MFD
R23 2000
L5 525
C37 16 MFD
C27 1 MFD
R11 1 MEG.
C28 ·35 MFD
R12 200,000
R13 50,000
R25 1,250
R26 1,250
C29 ·01 MFD
R14 20000
R15 ·5 MEG
R18 350
C30 25 MFD
C31 ·02 MFD
R17 200
C38 16 MFD
R18 300
R19 33
6·3V DIAL LAMPS