PHILIPS RADIOPLAYER

MODELS 185-A-B-C

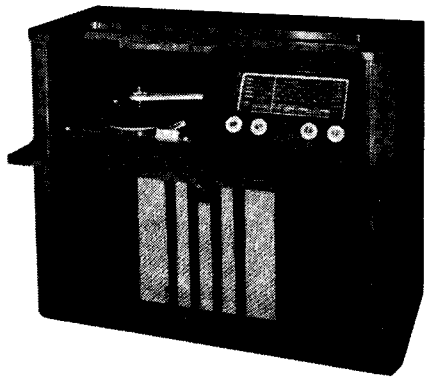

NOTE: Models 185 and 185A differ in audio circuitry design. Refer to parts lists and circuit diagram drawings for details.
Models 185A-B-C vary in type of record changer only. Refer to "Specifications."

SPECIFICATIONS

(Subject to alteration without notice)

Power Supply	200/250V, 40-50 c/s
Tuning Ranges	530-1620 Kc/s 4.7-9.2 Mc/s 9.1-18.4 Mc/s
Intermediate Frequency	455 Kc/s
Cabinet	Radiogram
Record Changer 185, 185A	Philips type AG1003
185B	Philips type NG1011
185C	Philips type AG1014

VALVE EQUIPMENT AND VOLTAGE ANALYSIS

Valve Function	Valve No.	Valve Type	Plate Volts	Screen Volts	Osc. P. Volts	Bias
Frequency Converter	V1	6AN7	205	57	48	—
I.F. Amplifier	V2	6BH5	205	57	—	—
Demodulator, A.V.C. and Audio Amplifier	V3	6BD7	62	—	—	—
Push-Pull Power Amplifier	V4	6M5	260	205	—	–6.4
Push-Pull Power Amplifier	V5	6M5	260	205	—	–6.4
Rectifier	V6	6V4	252/252V. A.C.			
Dial Lamps	V11, V12	6.3V, 0.32A. tubular screw				
Unfiltered B+ 265V. Filtered B+ 205V.			Filaments 6.35V.			

NOTE: These voltages are measured with an "1,000 ohms per volt" meter and may vary ± 10% from the figures quoted. They are measured from the socket points indicated to chassis or across the resistor listed. The receiver should be in a "no signal" condition.

TO REMOVE CHASSIS FROM CABINET

Remove the power plug from the mains outlet socket. Remove the four control knobs (a firm pull is all that is necessary). Unscrew the cabinet back and release aerial/earth terminal panel, also unclip the leads from inside the cabinet. Withdraw the pick-up, speaker and gramo. unit plugs from their respective sockets. Removal of the two securing bolts at rear of chassis and also the two dial back plate support screws (upper) will now allow withdrawal of chasis complete with dial scale. When refitting, care should be taken to see that the front edge of the side chassis flange engages under the lip of the front mounting bracket.

MAINS VOLTAGE ADJUSTMENT

The power transformer is provided with two mains voltage tappings on the primary winding—200/230 volts and 240/250 volts—for adjustment to the supply voltage at the point of installation. The receiver is adjusted at the factory to the 240/250 volts tapping.

DIAL CALIBRATION

In the event of an equal calibration error over the entire dial scale, the dial cursor can easily be moved on the dial drive cord to correct the error.

ALIGNMENT

Set volume control to maximum and tone control to central position. With the tuning capacitor fully closed, set the dial cursor on the 120 mark of the relocation scale.

I.F. Alignment

Alignment procedure of the I.F. channel is as under:—
Screw out iron core of 2nd I.F.T. primary (nearer 6BH5) as far as possible. Adjust iron cores at 455 Kc/s for maximum output in the following sequence—

Peak secondary of 2nd I.F.T. (nearer 6BD7).
Peak secondary of 1st I.F.T. (nearer 6BH5).
Peak primary of 1st I.F.T. (nearer 6AN7).
Peak primary of 2nd I.F.T. (nearer 6BH5).

Do not repeat any adjustments.

R.F. Alignment

The trimmer layout drawing is shown as an inset on the circuit diagram drawing.

B/C band alignment frequencies are: 1,420 Kc/s, 3XY (oscillator and aerial trimmers), and 600 Kc/s, 7ZL (slug padding with gang rocking). In short wave alignment, SW2 band (4.7-9.2 Mc/s) should be completed before attempting alignment of SW1 band. The oscillator operates on a frequency above signal frequency so that of the two signals tunable on the receiver, the higher frequency one is correct.

On SW2 band (4.7-9.2 Mc/s) alignment frequencies are: 4.825 Mc/s (114 on relocation scale), (oscillator coil slug) and 8.9 Mc/s (16 on relocation scale), (oscillator and aerial trimmers). Rock the tuning gang while adjusting the aerial trimmer.

SW1 band (9.1-18.4 Mc/s) alignment frequency is 17.8 Mc/s (small green triangle), (oscillator and aerial trimmers, rock gang while adjust aerial trimmers). Calibration should be checked at 9.65 Mc/s (small green triangle).

Do not attempt to adjust the iron cores of the aerial coils.

MISCELLANEOUS COMPONENTS

No. on Dial Cord Layout Drawing	Description	Code No.
6	Assembly, cursor	CR.480.664
—	Assembly, lampholder, x2	C/F 733-5-4
3	Assembly, tuning spindle	CR.371.223
—	Badge	CR.531.408
—	Bank, W/C switch (aerial)	CZ.200.060
—	Bank, W/C switch (osc.)	CZ.200.061
—	Clip, spring (knob), x4	CS.281.832
—	Clip, spring (I.F.T. mtg.), x2	A3.652.58
4	Cord, dial drive	69" of cord required
1	Drum, dial	CS.360.006
—	Knob, control, x4	CR.523.714

No. on Dial Cord Layout Drawing	Description	Code No.
—	Plug, male (gramo. unit power)	CZ.365.115
—	Plug, 2 pin polarised (speaker and pick-up)	C/F 691-5-1
5	Pulley, dial (large)	CS.359.618
2	Pulley, dial (small), x2	CS.359.617
—	Scale, dial	CS.412.395
—	Socket, female (gramo. unit power)	CZ.365.116
—	Socket, 2 pin polarised (speaker and pick-up)	C/F 733-16-1
—	Socket, valve (noval), x6	C/F 733-2-14
7	Spring, cursor	CS.212.016
—	Spring, dial cord	CS.210.043

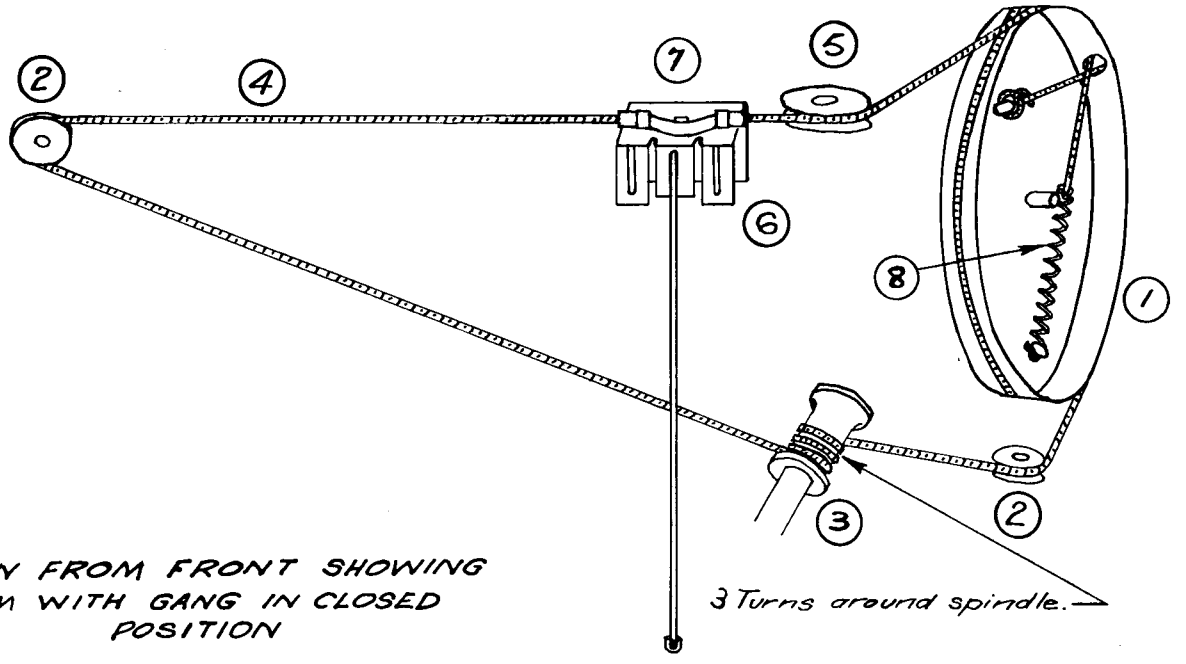

Published by
PHILIPS ELECTRICAL INDUSTRIES PTY. LTD.
SYDNEY - MELBOURNE - BRISBANE - ADELAIDE - PERTH

FEB., 1958

Harman & Jacka Ltd. Print.—14043

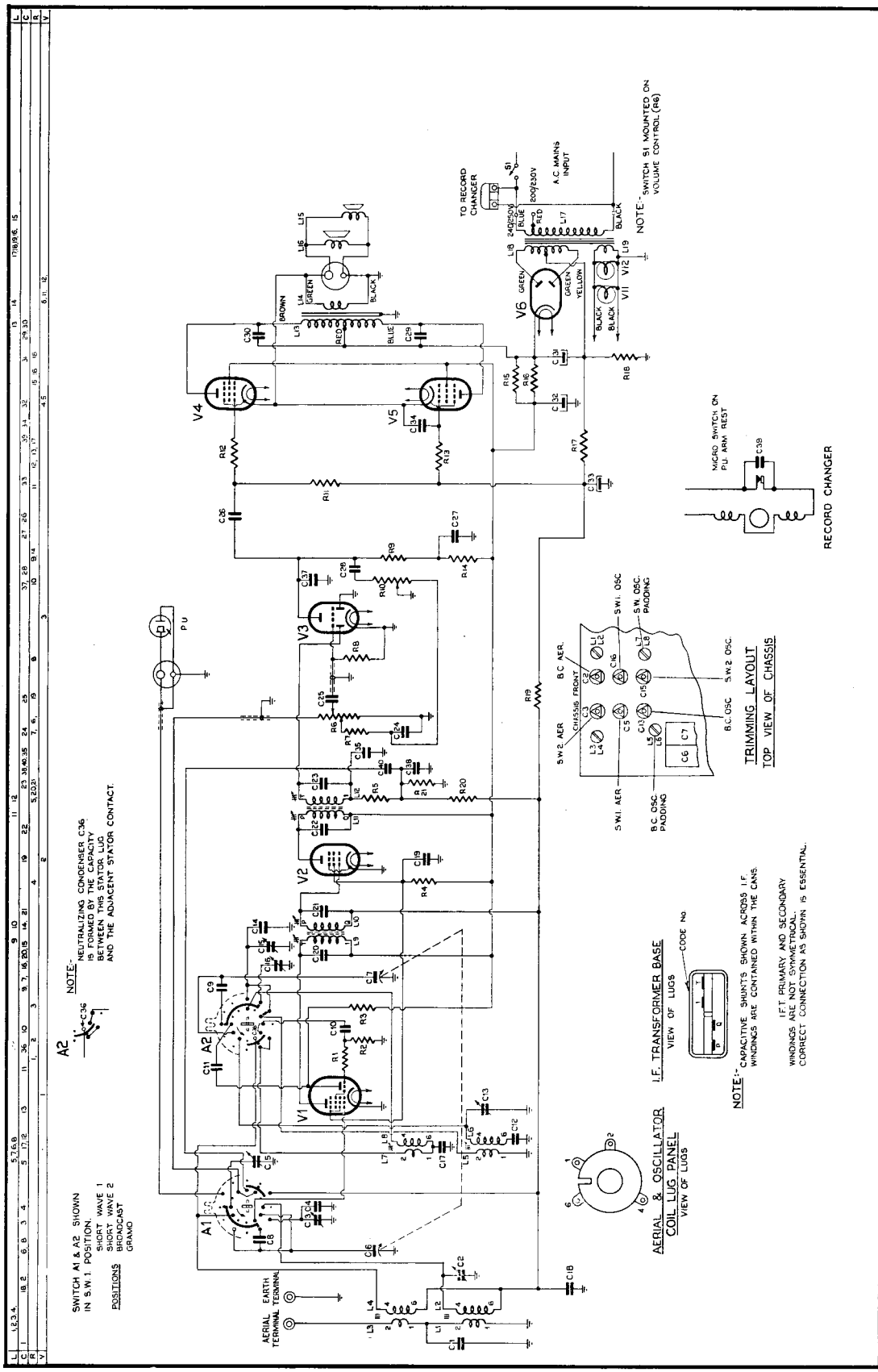
NOTE:- NEUTRALIZING CONDENSER C36 IS FORMED BY THE CAPACITY BETWEEN THIS STATOR LUG AND THE ADJACENT STATOR CONTACT.
SWITCH A1 & A2 SHOWN IN S.W.1 POSITION.
POSITIONS
SHORT WAVE 1
SHORT WAVE 2
BROADCAST
GRAMO
AERIAL TERMINAL
EARTH TERMINAL
AERIAL & OSCILLATOR COIL LUG PANEL
VIEW OF LUGS
I.F. TRANSFORMER BASE
VIEW OF LUGS
CODE No
NOTE:- CAPACITIVE SHUNTS SHOWN ACROSS I.F. WINDINGS ARE CONTAINED WITHIN THE CANS.
I.F.T. PRIMARY AND SECONDARY WINDINGS ARE NOT SYMMETRICAL. CORRECT CONNECTION AS SHOWN IS ESSENTIAL.
TRIMMING LAYOUT
TOP VIEW OF CHASSIS
B.C. AER.
S.W.1. OSC.
S.W. OSC. PADDING
S.W.2. OSC.
B.C. OSC.
S.W.2. AER
S.W.1. AER
B.C. OSC. PADDING
CH1556 FRONT
RECORD CHANGER
MICRO SWITCH ON P.U. ARM REST
TO RECORD CHANGER
A.C. MAINS INPUT
200/230V
240/250V
NOTE:- SWITCH S1 MOUNTED ON VOLUME CONTROL (R6)
P.U.
V1
V2
V3
V4
V5
V6
V7
V8
A1
A2

MODEL 185

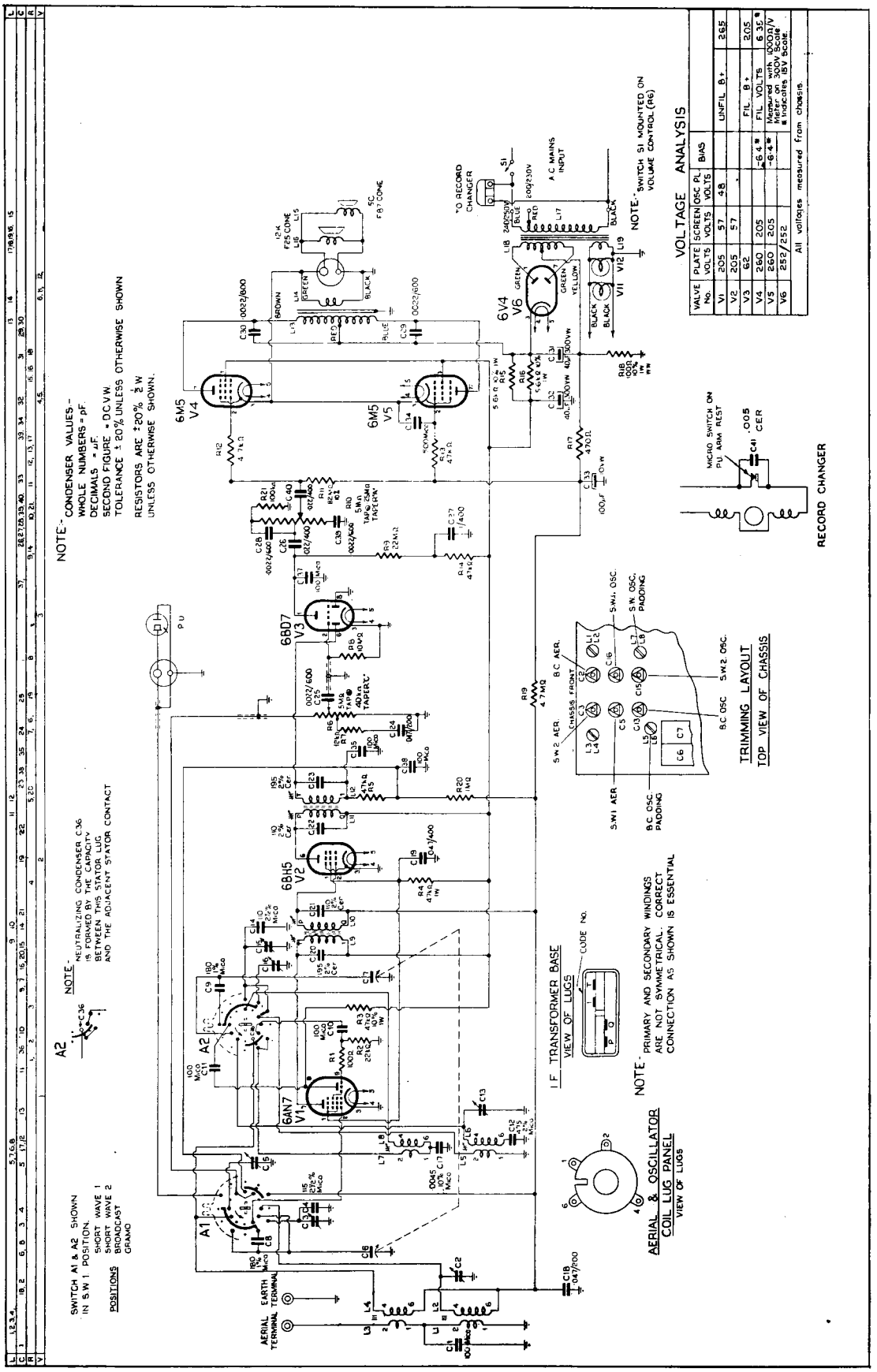

MODEL 185A-B-C

PARTS LIST
MODEL 185

CAPACITORS

No.	Description	Code No.
C1, 10, 11, 35, 37, 38	100 pF mica	
C2, 3, 5, 15, 16	30 pF air trimmer	CZ.113.700
C4	115 pF mica 2½%	CZ.066.138
C6, 7	2 gang tuning	CZ.107.755
C8, 9	180 pF mica 1%	CZ.065.722
C12	475 pF mica 2%	CZ.066.119
C13	60 pF air trimmer	49.055.58
C14	110 pF mica 2½%	CZ.066.140
C17	0.0045 mF mica 10%	
C18, 40	0.047 mF 200V paper	
C19	0.047 mF 400V paper	
C20, 21, 22, 23	Part of I.F. transformers	
C24	0.033 mF 200V paper	
C25	0.01 mF 400V paper	
C26, 28	0.0047 mF 600V paper	
C27	0.1 mF 400V paper	
C29, 30	0.0022 mF 600V paper	
C31, 32	40 mF 350V electrolytic	
C33	100 mF 10V electrolytic	
C34	500 pF mica	
C36	In-built neutralising capacitor—refer circuit diagram drawing	
C39	0.005 mF ceramic (anti-click capacitor)	

All tolerances are ± 20% unless otherwise specified.

RESISTORS

No.	Description	Code No.
R1	100 ohms ½W W/W	
R2	22,000 ohms ½W carbon	
R3	47,000 ohms 1W carbon 10%	
R4	47,000 ohms 1W carbon	
R5, 13, 14	47,000 ohms ½W carbon	
R6	0.5 megohm carbon potentiometer tapped at 0.25 megohm with S.P.S.T. switch (volume)	CZ.032.014
R7	12,000 ohms ½W carbon 10%	
R8	10 megohms ½W carbon	
R9, 21	0.22 megohm ½W carbon	
R10	1 megohm carbon potentiometer (tone)	CZ.029.149
R11	0.47 megohms ½W carbon	
R12	4,700 ohms ½W carbon	
R15, 16	5,600 ohms 1W carbon 10%	
R17	470 ohms ½W carbon	
R18	100 ohms 1W W/W 10%	
R19	4.7 megohm ½W carbon	
R20	1 megohm ½W carbon	

All tolerances are ± 20% unless otherwise specified.

COILS

No.	Ohms	Description	Code No.
L1	19.6-26.4	B/C aerial coil	CZ.323.026
L2	1.5-2.0		
L3	1.2-1.7	S/W aerial coil	CZ.323.027
L4	<0.5		
L5	0.8-1.2	B/C oscillator coil	CZ.330.613
L6	2.7-3.7		
L7	<0.5	S/W oscillator coil	CZ.330.614
L8	<0.5		
L9	4.7-5.2	1st I.F. transformer	A3.126.84
L10	8.0-9.0		
L11	8.3-9.2	2nd I.F. transformer	CZ.320.444
L12	4.7-5.2		
L13		Output transformer 15,000 ohms P-P	Type KOL33 CZ.345.041
L14			
L15		Speaker	Type 5C F87
L16		Speaker	Type 12K F25
L17	26-36	Power transformer	CZ.344.089
L18	315-425		
L19	<0.5		

IMPORTANT! When ordering spare parts, quote CODE NUMBER of part and MODEL NUMBER of Receiver. In claiming free replacement under GUARANTEE, return defective part PROMPTLY and quote MODEL and SERIAL NUMBER of Receiver and DATE OF PURCHASE.

PARTS LIST
MODEL 185A-B-C

CAPACITORS

No.	Description	Code No.
C1, 10, 11, 35, 37, 38	100 pF mica	
C2, 3, 5, 15, 16	30 pF air trimmer	CZ.113.700
C4	115 pF mica 2½%	CZ.066.138
C6, 7	2 gang tuning	CZ.107.755
C8, 9	180 pF mica 1%	CZ.065.722
C12	475 pF mica 2%	CZ.066.119
C13	60 pF air trimmer	49.055.58
C14	110 pF mica 2½%	CZ.066.140
C17	0.0045 mF mica 10%	
C18, 24	0.047 mF 200V paper	
C19	0.047 mF 400V paper	
C20, 21, 22, 23	Part of I.F. transformers	
C25, 28, 29, 30, 39	0.0022 mF 600V paper	
C26, 40	0.022 mF 400V paper	
C27	0.1 mF 400V paper	
C31, 32	40 mF 350V electrolytic	
C33	100 mF 10V electrolytic	
C34	500 pF mica	
C36	In-built neutralising capacitor—refer circuit diagram drawing	
C41	0.005 mF ceramic (anti-click capacitor)	

All tolerances are ± 20% unless otherwise specified.

RESISTORS

No.	Description	Code No.
R1	100 ohms ½W W/W	
R2	22,000 ohms ½W carbon	
R3	47,000 ohms 1W carbon 10%	
R4	47,000 ohms 1W carbon	
R5, 13, 14	47,000 ohms ½W carbon	
R6	0.5 megohm carbon potentiometer tapped at 40,000 ohms with S.P.S.T. switch (volume)	CZ.032.016
R7	12,000 ohms ½W carbon 10%	
R8	10 megohms ½W carbon	
R9	0.22 megohm ½W carbon	
R10	0.5 megohm carbon potentiometer tapped at 0.25 megohm (tone)	CZ.029.150
R11	0.82 megohms ½W carbon 10%	
R12	4,700 ohms ½W carbon	
R15, 16	5,600 ohms 1W carbon 10%	
R17	470 ohms ½W carbon	
R18	100 ohms 1W W/W 10%	
R19	4.7 megohm ½W carbon	
R20	1 megohm ½W carbon	
R21	100,000 ohms ½W carbon	

All tolerances are ± 20% unless otherwise specified.

COILS

No.	Ohms	Description	Code No.
L1	19.6-26.4	B/C aerial coil	CZ.323.026
L2	1.5-2.0		
L3	1.2-1.7	S/W aerial coil	CZ.323.027
L4	<0.5		
L5	0.8-1.2	B/C oscillator coil	CZ.330.613
L6	2.7-3.7		
L7	<0.5	S/W oscillator coil	CZ.330.614
L8	<0.5		
L9	4.7-5.2	1st I.F. transformer	A3.126.84
L10	8.0-9.0		
L11	8.3-9.2	2nd I.F. transformer	CZ.320.444
L12	4.7-5.2		
L13		Output transformer 15,000 ohms P-P	Type KOL33
L14			CZ.345.041
L15		Speaker	Type 5C F87
L16		Speaker	Type 12K F25
L17	26-36		
L18	315-425	Power transformer	CZ.344.089
L19	<0.5		

IMPORTANT! When ordering spare parts, quote CODE NUMBER of part and MODEL NUMBER of Receiver. In claiming free replacement under GUARANTEE, return defective part PROMPTLY and quote MODEL and SERIAL NUMBER of Receiver and DATE OF PURCHASE.