SANYO

Sanyo Sounds Exciting!

12-transistor, 4-band Portable/Car Radio

MODEL 12H-864

SERVICE MANUAL

SANYO ELECTRIC CO., LTD.

INTERNATIONAL DIVISION: SANYO ELECTRIC TRADING CO., LTD.
OSAKA, JAPAN

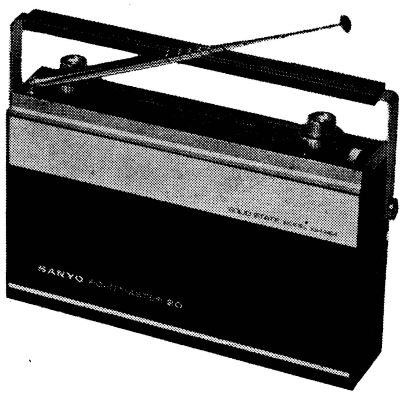

SPECIFICATIONS

FREQUENCY RANGE:	FM	87 - 108 MHz
	MW	535 - 1605 KHz
	SW1	2.3 - 7.3 MHz
	SW2	8.0 - 22.0 MHz
INTERMEDIATE FREQUENCY:	FM	10.7 MHz
	AM	455 KHz
SENSITIVITY (for 50mW output)	FM	1.4 μV
	MW	50 μV/m
	SW1	40 μV/m
	SW2	7 μV
OUTPUT POWER:	Maximum	1,000 mW
	Undistorted	600 mW

POWER SUPPLY:	DC 9V (6 "AA" size penlight batteries) or AC adaptor thru 9V jack	
CURRENT DRAIN:	No signal	AM 14mA
		FM 17mA
	Maximum	AM 185mA
		FM 185mA
SPEAKER:	4″×6″ oval permanent dynamic speaker Voice coil impedance 8 ohms	
DIMENSIONS:	8⅞″ wide × 5¼″ high × 2¼″ deep	
NET WEIGHT:	2.7 lbs. (1.2 kg)	

DIAL CORD STRINGING

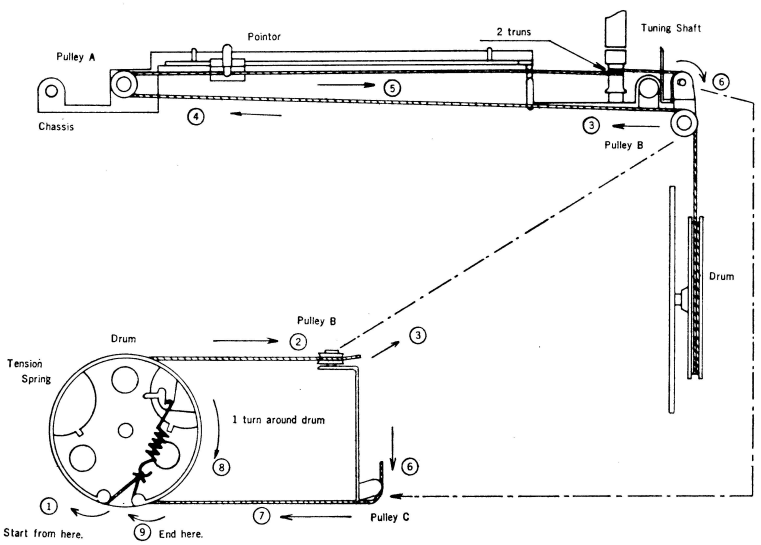

HOW TO TAKE OUT CHASSIS

1. Loosen two (2) screws on back housing and disassemble back housing from front housing.
2. Take off four Control Knobs on the top.
3. Remove four (4) screws marked in red on their heads, which fix chassis onto front housing.
4. Take out chassis from housing carefully.
5. Solder off jumper-leads if required for better working and servicing.

PARTS LIST

PARTS NO.	DESCRIPTION	Q'TY
HOUSING		
R-113396f	Main Metal Casing	1
R-113397d	Metal Casing	1
R-113398	Metal Lid	1
R-113399	Hinge Metal	1
R-471725	Marking Sheet -printed paper	1
R-113416	Lever -for locking	1
R-241238	Shaft	2
R-13085	Spring	2
R-13061	E-ring Washer	2
R-12352	Tension Spring	1
R-27160	Guide Pin	1
R-35236	Polyethylene Cushion	4
R-S8988L	Speaker Box -without speaker	1
R-S8987L	Angle (w/screw) -speaker box mtg	2
R-111685	Perforated Metal -unit mtg	1
R-112979	Key	2
CHASSIS		
R-41729	Printed Circuit Board	1
R-113401	Metal Mount	1
R-27154a	Needle -lead-in guide	1
R-15333	Tension Spring	1
R-113431a	Heat Sink	1
ELECTRIC ITEMS		
R-W6195②	Choke Coil	1
R-W6304-2	Input Transformer	1
R-W6305a	Output Transformer	1
R-S6415	Speaker	1
R-R7006	Noise Suppressor (resistor)	1
R-C4005	Noise Suppressor (capacitor)	1
R-S4453	Slide Switch -voltage select	1
R-S1102	Polarity Reverse Plug	1
R-S2098 or R-S2164	Polarity Reverse Socket	1
R-S2155	Socket	1
R-S1286	Fuse Holder	1
R-S1044	Fuse 1 ampere	1
R-S2041	Terminal Socket -speaker lead	1
R-S3218	Speaker Lead (w/plug)	1
R-S3063	Lug Terminal -power transistor	2

SCHEMATIC LOCATION	PART NO.	DESCRIPTION
SEMICONDUCTORS		
	2SB474B	Power Transistor (brown, red & orange coloring) with Bakelite Bushings Mylar Films
	2SB185B	Transistor
	SDT-02	Thermistor
	R-S1321	Zener Diode (1S331)
FIXED VALUE RESISTORS		
R1	R-R560K	56 ohms
R2	R-R823K	82K ohms
R3	R-R472K	4.7K ohms
R4	R-R272K	2.7K ohms
R5	R-R103K	10K ohms
R6	R-R5N6K	5.6 ohms
R7	R-R151K	150 ohms
R8	R-R124K	120K ohms
R9	R-R271K	270 ohms ½W
R10	R-R220K	22 ohms
R11	R-R821K	820 ohms
R12	R-R330K	33 ohms
R13	R-R102K	1K ohms
R14 R16 R17	R-R3N3K	3.3 ohms ½W
R15	R-R271M	270 ohms ½W ±20%
FIXED VALUE CAPACITORS		
C2 C11	R-CKD403Z	Ceramic 0.04μF +80% Square
C7 C8	R-CQS502M	Mylar 0.005μF ±20% Square
C12 C13 C16	R-S8127a	Spark Plate Capacitor
C14 C15	R-CMT504M	Metalized Paper 0.5μF ±20%
ELECTROLYTIC CAPACITORS		
C1	R-C9131	5μF 6V
C3	R-C9162a	500μF 10V
C5	R-C9134	100μF 3V
C10	R-C9127a	500μF 15V

ALIGNMENT PROCEDURES

a) COLLECTOR CURRENT ADJUSTMENT

Power supply of DC 9V is applied on the unit. Then it is switched on and tuned in no signal. Semi-fixed resistor (VR 100K) in IF-201 should be so adjusted to provide 600 micro-amperes current circulation thru collector of the transistor (Tr203 2SC772C).
In order to make this adjustment, metal casing of IF-201 should be necessary to be uncovered.

b) AM ALIGNMENT

Signal generator output: Modulation frequency 400Hz. Modulation percentage 30%. Signal level just high enough to provide meter deflection.

Setting of control knobs: Volume control at maximum. Tone control at optimum high note emphasis.

Output meter connection: Across dummy load (8 ohms) connected to earphone jack or the speaker.

Power Supply: DC 9V, 300mA or six penlight batteries.

PROCEDURES	SIGNAL APPLICATION	FREQUENCY OF SIGNAL GEN.	DIAL SETTING OF RADIO	COMPONENTS TO BE ADJUSTED FOR MAXIMUM	
IF STAGES	From IRE loop	455 KHz	Lowest End	(IFT T206, T207 & T208)	
MW OSCILLATOR	From IRE loop	515 KHz	Lowest End	MW Oscillator Coil	L11
		1650 KHz	Highest End	MW Oscillator Trimmer	Ct8
MW ANTENNA	From IRE loop	600 KHz	600 KHz	MW Antenna Coil	L9a
		1400 KHz	1400 KHz	MW Antenna Trimmer	Ct5
SW1 OSCILLLATOR	From IRE loop	2.24 MHz	Lowest End	SW1 Oscillator Coil	L12
		7.4 MHz	Highest End	SW1 Oscillator Trimmer	Ct9
SW1 ANTENNA	From IRE loop	2.5 MHz	2.5 MHz	SW1 Antenna Coil	L9b
		6.5 MHz	6.5 MHz	SW1 Antenna Trimmer	Ct6
SW2 OSCILLATOR	Thru dummy ant.	7.75 MHz	Lowest End	SW2 Oscillator Coil	L13
		22.5 MHz	Highest End	SW2 Oscillator Trimmer	Ct10
SW2 ANTENNA	Thru dummy ant.	8.5 MHz	8.5 MHz	SW2 Antenna Coil	L10
		21.0 MHz	21.0 MHz	SW2 Antenna Trimmer	Ct7

c) AUTO PERFORMANCE ALIGNMENT

Adjustment of these auto stages have been completely finished in factory and it is designed to minimize variation of line-upped state in time as well as in use. Therefore, any realignment will not always be required in normal servicing.
In case of adjustment, a specially made device (which substitues Auto Bracket of model R-S864 and provide accessibility to the adjustable parts such as coils and trimmers) would be required.
Radio set installed into a special device and "AUTO" button depressed.

Signal generator output: Modulation frequency 400 Hz. Modulation percentage 30%.
Signal level just high enough to provide meter deflection.

Setting of control knobs: Volume control at maximum.
Tone control at optimum high note emphasis.

Output meter connection: Across dummy load (8 ohms) connected to speaker-leads.

Power supply: DC 13.2V to R-S864.

Signal application: Output of signal genrator is applied thru dummy antenna to antenna receptacle.

PROCEDURES	FREQUENCY OF SIGNAL GEN.	DIAL SETTING OF RADIO	COMPONENTS TO BE ADJUSTED FOR MAX.	FREQUENCY OF S.G.	DIAL SETTING OF RADIO	COMPONENTS TO BE ADJUSTED
MW AUTO	600 KHz	600 KHz	Auto Ant. Coil L7	1400 KHz	1400 KHz	Trimmer Ct3
SW1 AUTO	2.5 MHz	2.5 MHz	Auto Ant. Coil L8	6.5 MHz	6.5 MHz	Trimmer Ct4

g) AUDIO OUTPUT STAGE ALIGNMENT

Operate the unit ordinarily and apply audio signals into first audio stage. Observe the amplified wave forms at final stage with oscilloscope. Adjust the semi-fixed resistor (VR 50K) for the best operating point on which waveforms are clipped equally at both tops and bottoms of waves.

e) **FM IF ALIGNMENT**

Following adjustment is actually impossible in normal ways because of inaccessibility to the respective IF transformers with a screw driver and to Test Point Tp-3.

Sweep marker generator for FM IF stage adjustment (10.7 MHz)

.Setting of control knobs: Volume control at minimum.
Tone control at optimum low note emphasis.

Power Suuply: DC 9V, 300mA or six penlight batteries.

PROCEDURES	ALIGNMENT FREQUENCY	TESTING EQUIPMENT CONNECTION	ADJUSTMENT
IFT T204	10.7 MHz	Connect output cable of S.M. Generator to test points, Tp-1 and Tp-2, and input cable thru net-work to test points, Tp-3 and Tp-5.	Detune T205 and tune T204 for maximum gain and symmetry of responce curve.
IFT T203	10.7 MHz	The same as above.	Tune T203 for max. gain and symmetry of responce curve.
IFT T202	10.7 MHz	The same as above.	Tune T202 for max. gain and symmetry of responce curve.
IFT T201	10.7 MHz	The same as above.	Tune T201 for max. gain and symmetry of responce curve.
IFT T1	10.7 MHz	The same as above.	Tune T1 for max. gain and symmetry of responce curve.
IFT T205	10.7 MHz	Connect output cable of S.M. Generator to test points, Tp-1 and Tp-2, and input cable thru net-work to test points Tp-4 and Tp-5.	Tune T205 for perfect symmetry and linearity of S-shape curve.

f) **FM ALIGNMENT**

Signal generater output: Modulation frequency 400 Hz. Frequency deviation 22.5 KHz.

Setting of control knobs: Volume control at maximum.
Tone control at optimum high note emphasis.

Output meter connection: Across dummy load (8 ohms) connected to earphone jack or speaker.

Powers upply: DC 9V, 300mA or six penlight batteris.

Signal application: Thru dummy antenna (75 ohms) to test points, Tp-1 and Tp-2.

PROCEDURES	DIAL SETTING OF RADIO	FREQUENCY OF SIGNAL GEN.	ADJUST FOR MAXIMUM	DIAL SETTING OF RADIO	FREQUENCY OF SIGNAL GEN.	ADJUST FOR MAXIMUM
Oscillator	87 MHz	87 MHz	Coil L4	108 MHz	108 MHz	Trimmer Ct2
Antenna	90 MHz	90 MHz	Coil L2	106 MHz	106 MHz	Trimmer Ct1

MAIN PARTS IDENTIFICATION

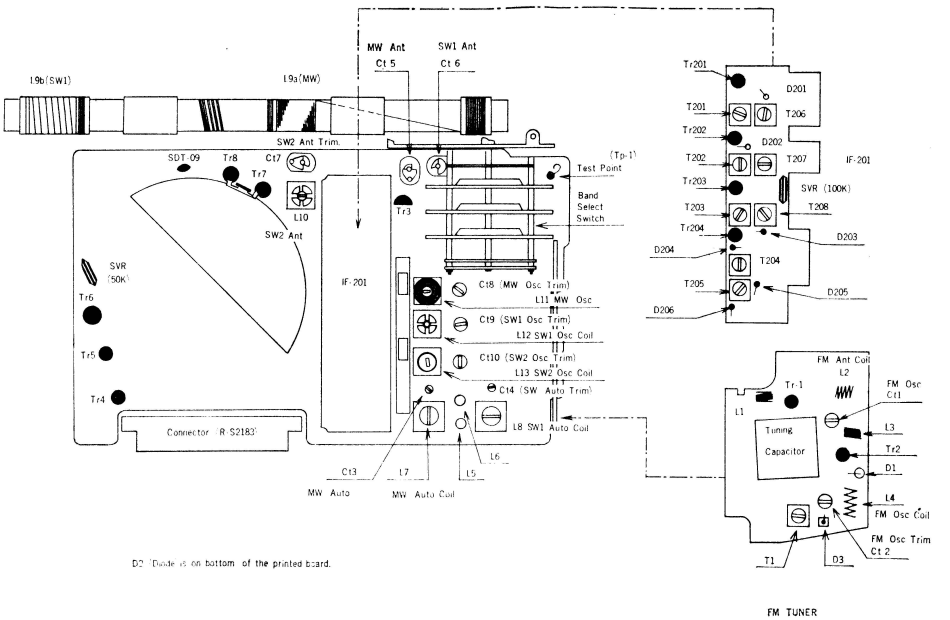

SCHEMATIC DIAGRAM

(12H-864)

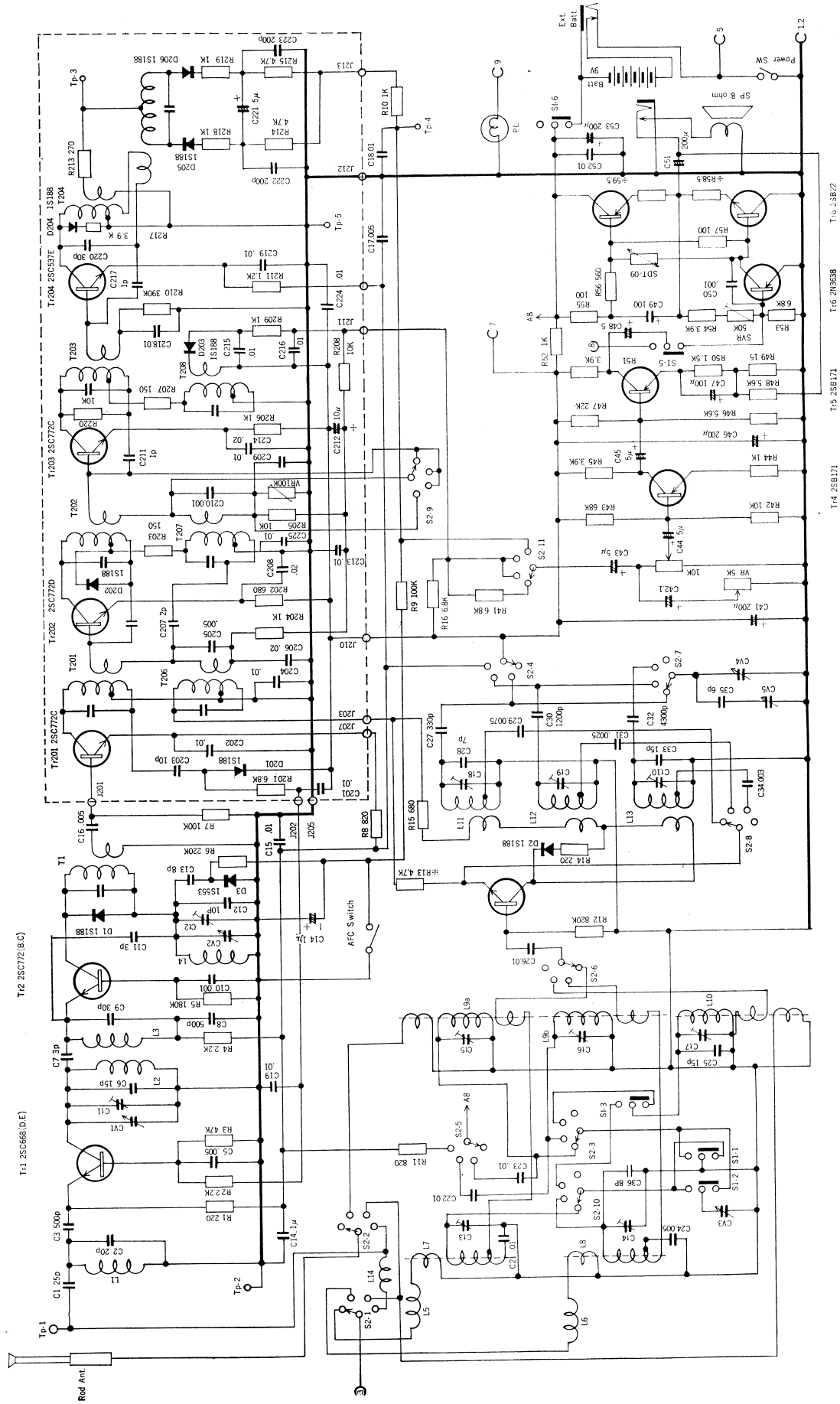

PARTS LIST

PART NO.	DESCRIPTION	Q'TY
HOUSING		
R-A12864	Housing Assembly	1
R-A31996	Front Housing Assembly	1
├R-31996d	Front Housing	1
├R-262019	Metal Decoration -SOLID STATE MODEL 12H-864	1
├R-27136	Badge -SANYO ROAD MASTER 20	1
├R-262020	Metal Strip -horizontal bar	1
├R-32808a	Top Escutcheon -metal plated plastic	1
└R-38192a	Dial Scale -cemented on top escutcheon	1
R-A31997	Back Housing Assembly	1
├R-31997a	Back Housing	1
└R-262021	Specification Metal	1
R-31999	Compartment Lid -battery compartment	1
R-S81682	Handle	1
R-241526	Stud Screw -handle mtg	2
R-311011	Plastic Base -handle mtg	2
R-	Vinyl Washer 6φ×11.5φ×0.3t -handle mtg	4
R-25330a	Spring Terminal -Positive terminal	1
R-25331a	Spring Terminal -negative terminal	1
R-	Eyelet 3.5φ×4 -spring terminal mtg	2
R-39475	Polypropyrene Sheet -battery instruction	1
R-113370	Metal Angle	1
R-	Felt 20×40×1.5t -on compartment lid	1
R-113429	Metal Mount -earphone jack mtg	1
R-S7092	Special Screw 3φ×50 -back housing mtg	2
R-S81683	Pointor	1
R-32810	Tuning Knob	1
R-S81734	Knob -tone control	1
R-S81686	Knob -volume control	1
R-S81687	Knob -band select	1
R-32809a	Knob -fine tuning control	1
R-13109	Spring Lock -for volume knob	(1)
R-13110	Spring Lock -for tone control knob	(1)
CHASSIS		
R-39457b	Chassis (plastic)	1
R-32767	Drum	1
R-S7083	Special Screw -drum mtg	1
R-24412	Pulley Shaft	2
R-27077	Pulley	3
R-15041	Tension Spring	1
R-	Dial Cord -0.3φ tetron 850mm	1
R-12477a	Shield Plate -for speaker yoke	1
R-	Black Vinyl Sheet 26×110	1
R-113402a	Metal Mount -rotary switch mtg	1
R-113368a	Metal Mount -fine tuning cap. mtg	1
R-113369a	Metal Mount -P.C.B. mtg	1

SCHEMATIC LOCATION	PART NO.	DESCRIPTION
SEMICONDUCTORS		
Tr1	2SC668	Transistor (D or E)
Tr2	2SC772	Transistor (B or C)
Tr3	2SC829C	Transistor
Tr4 Tr5	2SB171B	Transistor
Tr6	2N3638	Transistor
Tr7	2SD30	Transistor (No color or yellow)
Tr8	2SB22	Transistor (No color or yellow)
	SDT-09	Thermistor
D1 D2	1S188	Diode (AM)
D3	1S553	Variable Capacitance Diode
COILS & TRANSFORMERS		
L1 L2 L3	R-W9018	VHF Coil 6½ turns
L2	R-W9029	VHF Coil 4½ turns
L4	R-W9053	VHF Coil 5½ turns
L5	R-W1057	Choke Coil 330μH
L7	R-W2289a	Antenna Coil MW Auto
L8	R-W2390	Antenna Coil SW Auto
L9 L15	R-S81739a	Antenna Coil MW & SW1
	├R-W2389a	Antenna Coil
	├R-35195	Holder
L10	R-W2234	Antenna Coil SW2
L11	R-W8206	Oscillator Coil MW
L12	R-W8160	Oscillator Coil SW1
L13	R-W8259	Oscillator Coil SW2
T1	R-W5T168	IF Transformer FM
CONTROLS		
Cv1~Cv4	R-C1160	Variable Capacitor -main tuning
Cv5	R-C1096	Variable Capacitor -fine tuning
VR	R-R116107	Variable Resistor (dual) 10K+5K
SVR	R-R11010	Semi-fixed Resistor 50K
	R-C0064	Trimmer Capacitor (dual)
Ct3	R-C0065	Trimmer Capacitor (single)
Ct5 Ct6 Ct7	R-C0057a	Trimmer Capacitor (single)
S2	R-S4441	Rotary Switch -band select
S1	R-S4452	Slide Switch -Auto/Portable
	R-S4421	Slide Switch -AFC
MISCELLANEOUS		
	R-S6477a	Speaker
	R-S6365	Earphone
	IF-201	Assembled IF Block
	R-S1369	Telescopic Antenna
	R-12004	Lug Terminal -telescopic ant.
	R-S81688	Battery Holder Case
	R-S2183	Connector -circuit connector with R-S864
	R-S2139	Jack -earphone
	R-S2154	Jack -EXT. POWER
	R-S1151	Pilot Lamp
	R-261555	Heat Sink
	R-113364	Shield Case
	R-25239a	Spring -grounding of tuning cap.
	R-44065	Cushion -for main tuning cap.
	R-S3232①	

IF-201 ASSEMBLED IF BLOCK (Component of 12H-864)

SCHEMATIC DIAGRAM

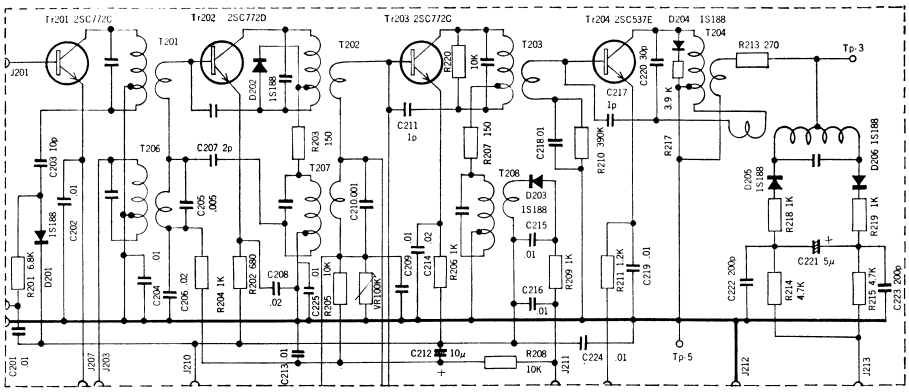

INTER-PARTS WIRING ILLUSTRATION

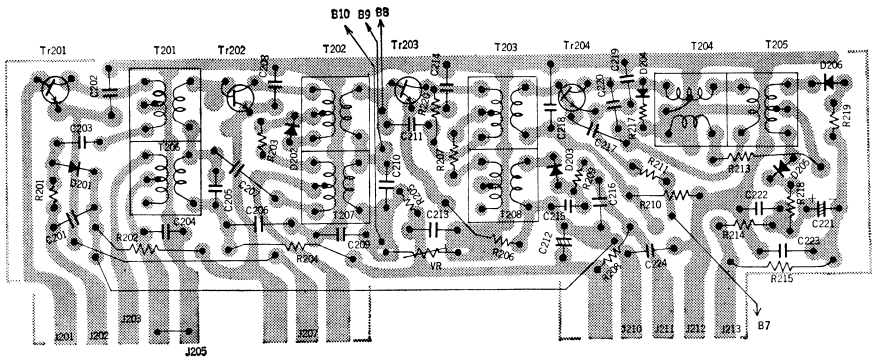

NOTE FOR SERVICING

This IF Blocks are always completely line-upped before assembling or delivery, so that any arrangement shall not be required in ordinary servicing. When there is some faulty found in IF Block, it might be better to replace it with new one. Alignment of IF stage will require special device for fit-in operation, as all IF transformers can not be accessed in usual way when incorporated in a radio unit.

PART SLIST (IF-201)

SCHEMATIC LOCATION	PART NO.	DESCRIPTION	Q'TY
T201 T202 T203	R-W5T308	IF Transformer FM	3
T204	R-W5T309	IF Transformer FM	1
T205	R-W5T310	IF Transformer FM	1
T206 T207	R-W5T311	FI Transformer AM	2
T208	R-W5T312	IF Transformer AM	1
	R-R11011	Semi-fixed Resistor 100K	1
	R-41718	Printed Circuit Board	1

FIXED VALUE CAPACITORS

C201 C202 C204 C209 C213 C215 C218 C219 C224 C225	R-CKD103Z	Ceramic 0.01μF +80%	5
C203	R-CKD100K	Ceramic 10pF ±10%	1
C205	R-CQR502M	Ruthyl 0.005μF ±20% Disc	1
C206 C208 C214	R-CKD203Z	Ceramic 0.02μF +80%	3
C207	R-CKD020J	Ceramic 2pF ±0.25pF	1
C210	R-CQR102M	Ruthyle 0.001μF ±20%	1
C211 C217	R-CKD010J	Ceramic 1pF ±0.25pF	1
C216	R-CQR103M	Ruthyle 0.01μF ±20%	1
C220 C223	R-CKD201K	Ceramic 200pF ±10%	2

SCHEMATIC LOCATION	PART NO.	DESCRIPTION	Q'TY
Tr201 Tr203	2SC772C	Transistor (for IF stage)	2
Tr202	2SC772D	Transistor (for IF stage)	1
Tr204	2SC537E	Transistor (for IF stage)	1
D201 D202 D203 D204	1S188 AM	Diode	4
D205 D206	1S188 FM	Diode	3
C212	R-C9132	Electrolytic Capacitor 10μF 3V	1
C221	R-C9131	Electrolytic Capacitor 5μF 6V	1

FIXED VALUE RESISTORS

All resistors below are of ¼W or ⅛W type with 10% allowances unless otherwise noted.

R201	R-R682K	6.8K ohms	1
R202	R-R681K	680 ohms	1
R203 R207	R-R151M	150 ohms ±20%	2
R204 R206 R209 R218 R219	R-R102K	1K ohms	5
R205 R208 R220	R-R103K	10K ohms	3
R210	R-R394K	390K ohms	1
R211	R-R122K	1.2K ohms	1
R213	R-R271K	270 ohms	1
R214 R215	R-R472K	4.7 Kohms	2
R217	R-R392K	3.9K ohms	1

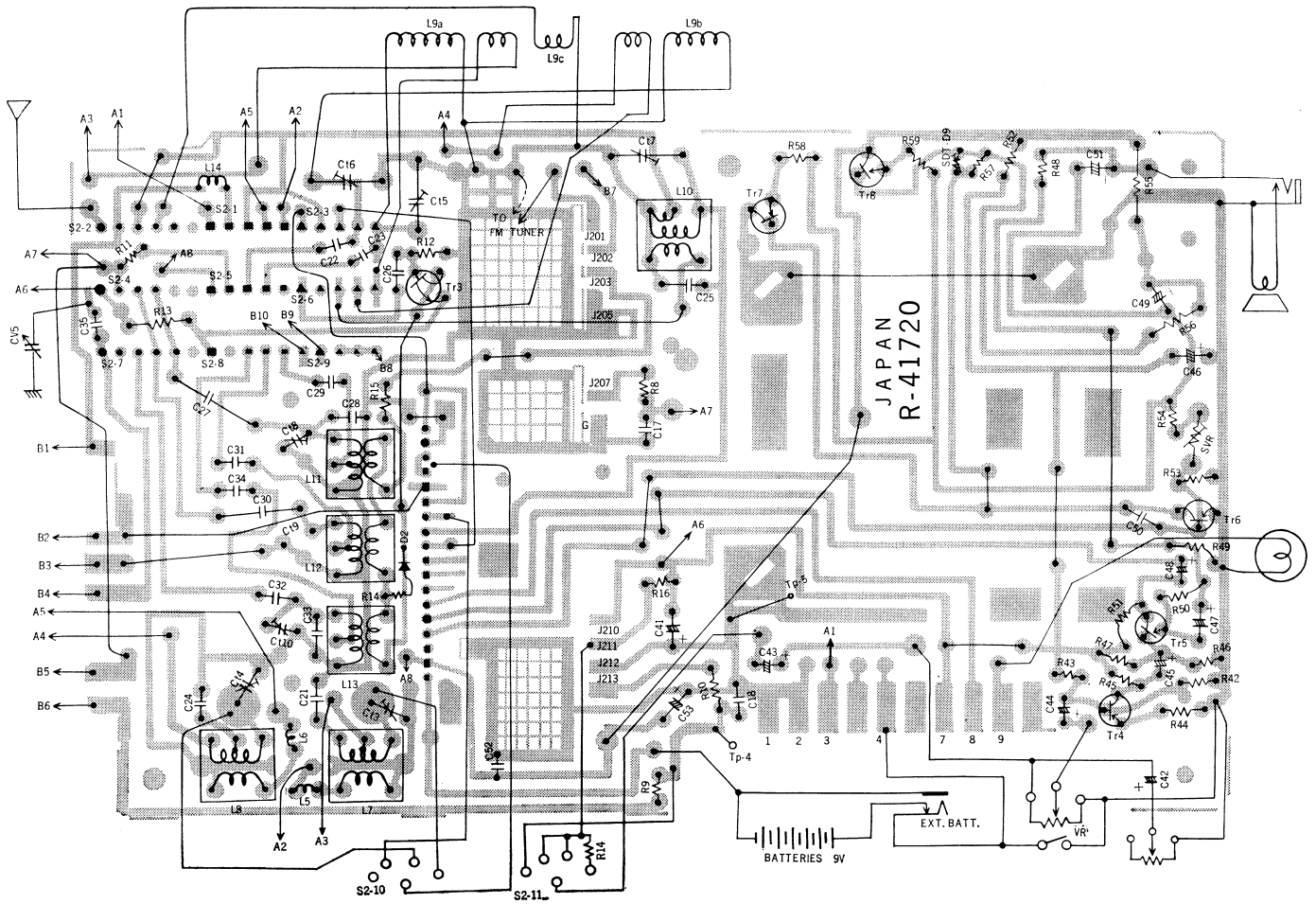

MEASURED VOLTAGES DEVELOPED ON RESPECTIVE TERMINALS OF TRANSISTORS AND COLLECTOR CURRENTS

		Tr 1	Tr 2	Tr 3	Tr 4	Tr 5	Tr 6	Tr 7	Tr 8
VOLTAGE	Collector	−5.1V	4.4V	0.65V	5.4V	2.15V	5.2V	6.0V	3.0V
	Base	−2.6V	0.57V	0.40V	0.65V	0.23V	2.5V	3.2V	0.2V
	Emitter	−2.12V	0.55V	0.25V	0.47V	0.1V	2.0V	3.0V	0V
COLLECTOR CURRENTS		400μA	400μA	800μA	730μA	600μA	2.5mA	6mA	6mA

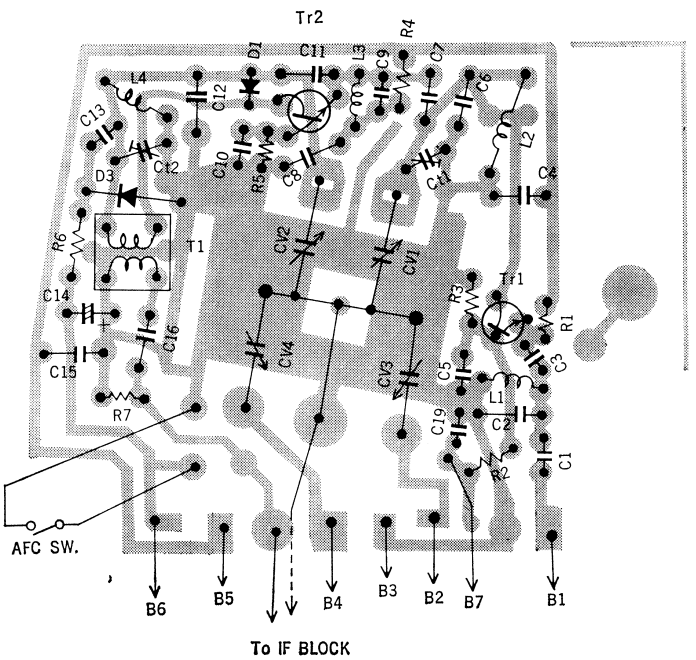

PARTS LIST

SCHEMATIC LOCATION	PART NO.	DESCRIPTION
FIXED VALUE CAPACITORS		
C1	R-CKD250K	Ceramic 25pF ±10%
C2	R-CKD200K	Ceramic 20pF ±10%
C4 C15 C19 C22 C23 C52	R-CKD103Z	Ceramic 0.01μF +80%
C5 C10	R-CKD102Z	Ceramic 0.001μF +80%
C6 C25 C33	R-CKD150K	Ceramic 15pF ±10%
C7 C11	R-CKD030J	Ceramic 3pF ±0.25pF
C8	R-CKD501M	Ceramic 500pF ±20%
C9	R-CKD300K	Ceramic 30pF ±10%
C12	R-CKD100K	Ceramic 10pF ±10%
C16 C17	R-CKD502Z	Ceramic 0.005μF +80%
C13	R-CKD080K	Ceramic 8pF ±0.5pF
C18 C21 C26	R-CQR103Y	Ruthyl 0.01μF ±20%
C24	R-CQS502Y	Mylar 0.005μF +30%
C28	R-CKD080K	Ceramic 8pF ±0.5pF N-1500
C29	R-CQS752Y	Mylar 0.0075μF+30%
C27	R-CQT331K	Styrol 330pF ±10%
C30	R-CQT122K	Styrol 1200pF ±10%
C32	R-CQT432K	Styrol 4300pF ±10%
C36	R-CQT281K	Styrol 280pF ±10%
	R-CKD271K	Ceramic 270pF ±10%
C31	R-CQS252Y	Mylar 0.0025μF+30%
C34	R-CQS302Y	Mylar 0.003μF +30%
C35	R-CKD060K	Ceramic 6pF ±0.5pF
C50	R-CQR102M	Ruthyl 0.001μF ±20%
(ELECTROLYTIC CAPACITORS)		
C14	R-C9203	1μF 10V
C41 C46	R-C9143	200μF 6V
C42	R-C9126	0.1μF 10V
C43 C44 C45 C48	R-C9131	5μF 6V
C47 C49	R-C9134	100μF 3V
C51 C53	R-C9146	200Fμ 10V

SCHEMATIC LOCATION	PART NO.	DESCRIPTION
(FIXED VALUE RESISTORS)		
R1 R14	R-R221K	220 ohms
R2	R-R222K	2.2K ohms
R3	R-R473K	47K ohms
R4	R-R222J	2.2K ohms ±5%
R5	R-R184K	180K ohms
R6	R-R224K	220K ohms
R7 R9	R-R104K	100K ohms
R8 R11	R-R821K	820 ohms
R10 R13 R52	R-R102K	1K ohms
R12 R42	R-R103K	10K ohms
R13	R-R472J	4.7K ohms
R15 R44	R-R681K	680 ohms
R16 R41 R53	R-R682K	6.8 Kohms
R20	R-R153K	15K ohms
R42	R-R103K	10K ohms
R43	R-R683K	68K ohms
R45 R51 R54	R-R392K	3.9K ohms
R17 R46 R48	R-R562K	5.6K ohms
R47	R-R223K	22K ohms
R49	R-R150K	15 ohms
R50	R-R152K	1.5K ohms
R21 R55 R57 R60	R-R101K	100 ohms
R56	R-R561K	560 ohms
R58 R59	R-RON5J	0.5 ohm ±5%
R18 R61	R-R390K	39 ohms

AUTO BRACKET

SPECIFICATIONS

POWER SUPPLY: DC 6 volts or 12 volts.
(Reversible grounding polarity)

AUDIO OUTPUT: Maximum 3,000mW (on 6 volts)
Undistorted 2,200mW (on 6 volts)
Maximum 6,000mW (on 12 volts)
Undistorted 4,000mW (on 12 volts)

SPEAKER: 6 inch permanent dynamic
4 ohm voice coil impedance

DIMENSIONS: 10-5/8″ wide×3″ high×7″ deep

WEIGHT: 3.3 lbs. (1.4 kg.)

SCHEMATIC DIAGRAM

TRANSISTORS VOLTAGE CHART

	COLLECTOR VOLTAGE		BASE VOLTAGE		EMITTER VOLTAGE		OLLECTORC CURRENT	
	on 6V	on 12V	on 6V	on 12V	on 6V	on 12V	on 6V	on 12V
2SB185	5.6V	5.6V	1.0V	1.0V	0.8V	0.8V	5.3mA	5.3mA
2SB474	6.6V	13.2V	0.1V	0.15V	0V	0V	12mA	14mA

NOTE: All voltages measured from common ground (positive line) to respective terminals of transistors.
Collector current of 2SB474 measured with meter applied between center tap on primary winding of output transformer and power supply line (−).

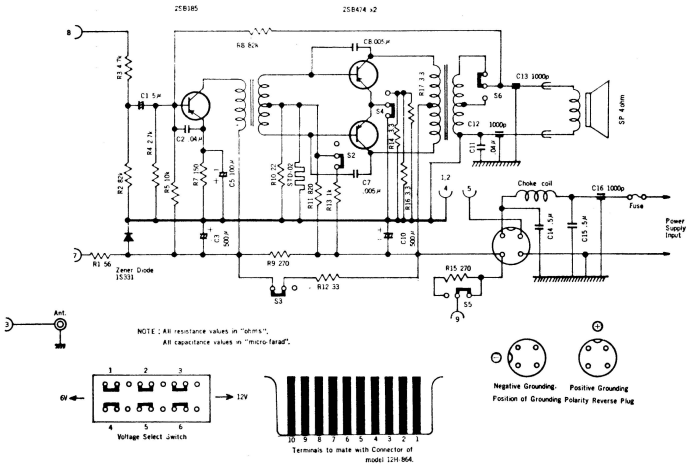
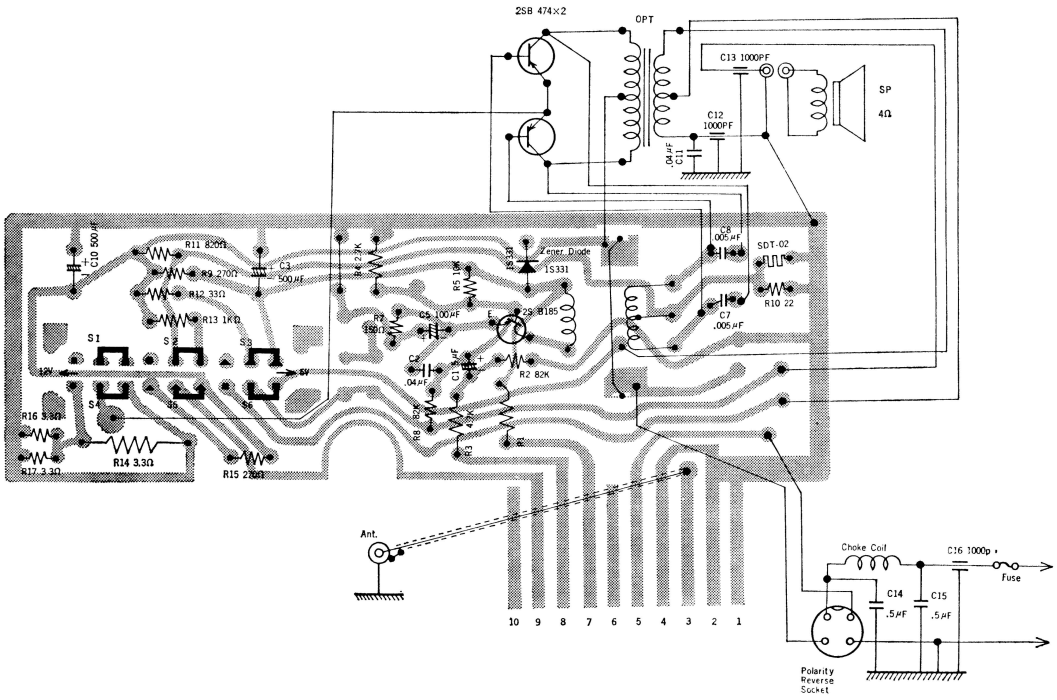
INTER-PARTS WIRING ILLUSTRATION